YASKAWA

YASKAWA AC Drive-A1000

High Performance Vector Control Drive

Technical Manual

Type: CIMR-AU□A□□□□

Models: 200 V Class: 0.4 to 110 kW (3/4 to 175 HP ND)
400 V Class: 0.4 to 630 kW (3/4 to 1000 HP ND)
600 V Class: 0.75 to 185 kW (1 to 250 HP ND)

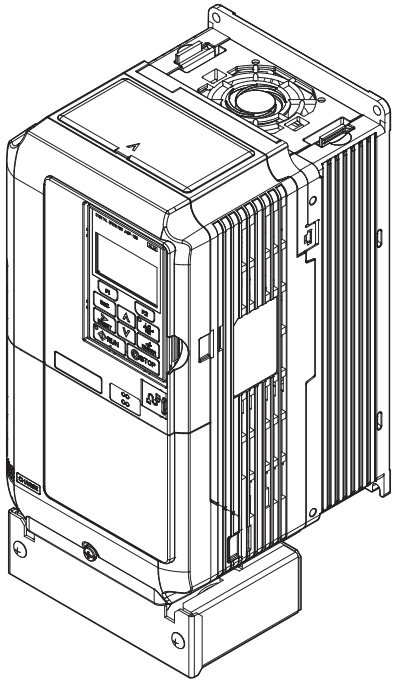

Receiving 1
Mechanical Installation 2
Electrical Installation 3
Start-Up Programming & Operation 4
Parameter Details 5
Troubleshooting 6
Periodic Inspection & Maintenance 7
Peripheral Devices & Options 8
Specifications A
Parameter List B
MEMOBUS/Modbus Communications C
Standards Compliance D
Quick Reference Sheet E

MANUAL NO. SIEP C710616 41H

This Page Intentionally Blank

◆ Quick Reference

Easily Set Parameters for Specific Applications	
Preset parameter defaults are available for setting up applications. ***Refer to Application Selection on page 173***.	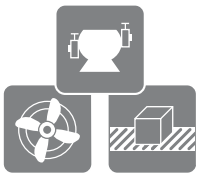

Run a Motor One Frame Larger
This drive can operate a motor one frame size larger when running variable torque loads such as fans and pumps. ***Refer to C6-01: Drive Duty Mode Selection on page 251***.

Drive a Synchronous PM Motor	
The drive can operate synchronous PM motors. ***Refer to Subchart A-3: Operation with Permanent Magnet Motors on page 170***.	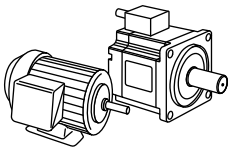

Perform Auto-Tuning
Automatic tuning sets motor parameters. ***Refer to Auto-Tuning on page 176***.

Maintenance Check Using Drive Monitors
Use drive monitors to check if fans, capacitors, or other components require maintenance. ***Refer to Performance Life Monitors Maintenance Monitors on page 463***.

Fault Display and Troubleshooting
Refer to Drive Alarms, Faults, and Errors on page 399 and ***Refer to Troubleshooting without Fault Display on page 449***.

Standards Compliance	
Refer to European Standards on page 738 and ***Refer to UL and CSA Standards on page 748***.	CE c UL us LISTED CSA®

This Page Intentionally Blank

Table of Contents

QUICK REFERENCE 3

i. PREFACE & GENERAL SAFETY 17

i.1 Preface 18

Applicable Documentation 18
Symbols 18
Terms and Abbreviations 19
Trademarks 19

i.2 General Safety 20

Supplemental Safety Information 20
Safety Messages 21
General Application Precautions 23
Motor Application Precautions 25
Drive Label Warning Example 28
Warranty Information 28

1. RECEIVING 29

1.1 Section Safety 30

1.2 General Description 31

A1000 Model Selection 31
Control Mode Selection 32

1.3 Model Number and Nameplate Check 35

Nameplate 35

1.4 Drive Models and Enclosure Types 39

1.5 Component Names 41

IP20/UL Type 1 Enclosure 41
IP00/Open Type Enclosure 44
Front Views 49

2. MECHANICAL INSTALLATION 51

2.1 Section Safety 52

2.2 Mechanical Installation 54

Installation Environment 54
Installation Orientation and Spacing 54
Instructions on Installation Using the Eye Bolts 56
Digital Operator Remote Usage 58
Exterior and Mounting Dimensions 61

2.3 Flange Type Enclosure (NEMA 12 Backside) Dimensions & Heat Loss 71
Flange Type Models 2A0004 to 2A0012, 4A0002 to 4A0005, and 5A0003 and 5A0004 71
Flange Type Models 2A0018 and 2A0021, 4A0007 to 4A0011, and 5A0006 and 5A0009 74
Flange Type Models 2A0030 and 2A0040, 4A0018 and 4A0023, and 5A0011 77
Flange Type Model 4A0031 80
Flange Type Models 2A0056, 4A0038, and 5A0017 and 5A0022 82
Flange Type Models 2A0069 and 2A0081, 4A0044, and 5A0027 and 5A0032 85
Flange Type Models 2A0110 and 4A0058 88
Flange Type Models 2A0138, 4A0072, and 5A0041 and 5A0052 90
Flange Type Models 4A0088 and 4A0103 92
Flange Type Models 2A0169 and 2A0211, 4A0139 and 4A0165, and 5A0062 to 5A0099 94
Flange Type Models 2A0250 and 2A0312, 4A0208, and 5A0125 and 5A0145 97
Flange Type Models 2A0360 and 2A0415, 4A0250 to 4A0362, and 5A0192 and 5A0242 99
Flange Type Model 4A0414 102
Flange Type Models 4A0515 and 4A0675 104
Flange Type Models 4A0930 and 4A1200 106

3. ELECTRICAL INSTALLATION 109

3.1 Section Safety 110
3.2 Standard Connection Diagram 112
3.3 Main Circuit Connection Diagram 115
Three-Phase 200 V Class Models 2A0004 to 2A0081
Three-Phase 400 V Class Models 4A0002 to 4A0044
Three-Phase 600 V Class Models 5A0003 to 5A0032 115
Three-Phase 200 V Class Models 2A0110, 2A0138
Three-Phase 400 V Class Models 4A0058, 4A0072
Three-Phase 600 V Class Models 5A0041, 5A0052 115
Three-Phase 200 V Class Models 2A0169 to 2A0211
Three-Phase 400 V Class Models 4A0088 to 4A0139
Three-Phase 600 V Class Models 5A0062 to 5A0099 116
Three-Phase 200 V Class Models 2A0250 to 2A0415
Three-Phase 400 V Class Models 4A0165 to 4A0675
Three-Phase 600 V Class Models 5A0125 to 5A0242 116
Three-Phase 400 V Class Models 4A0930, 4A1200 117
12-Pulse Rectification 117
3.4 Terminal Block Configuration 119
3.5 Terminal Cover 121
Models 2A0004 to 2A0081, 4A0002 to 4A0044, 5A0003 to 5A0032 (IP20/NEMA 1, UL Type 1 Enclosure) 121
Models 2A0110 to 2A0250, 4A0208 to 4A1200, and 5A0125 to 5A0242 (IP00/Open Type Enclosure) 122
3.6 Digital Operator and Front Cover 123
Removing/Reattaching the Digital Operator 123
Removing/Reattaching the Front Cover 123
3.7 Top Protective Cover 126
Removing the Top Protective Cover 126
Reattaching the Top Protective Cover 126
3.8 Main Circuit Wiring 127
Main Circuit Terminal Functions 127
Protecting Main Circuit Terminals 128

Main Circuit Wire Gauges and Tightening Torques 129
Main Circuit Terminal and Motor Wiring 137
3.9 Control Circuit Wiring 139
Control Circuit Connection Diagram 139
Control Circuit Terminal Block Functions 139
Terminal Configuration 141
Wiring the Control Circuit Terminal 142
Switches and Jumpers on the Terminal Board 144
3.10 Control I/O Connections 145
Sinking/Sourcing Mode for Digital Inputs 145
Sinking/Sourcing Mode Selection for Safe Disable Inputs 146
Using the Pulse Train Output 146
Terminal A2 Input Signal Selection 147
Terminal A3 Analog/PTC Input Selection 147
Terminal AM/FM Signal Selection 148
MEMOBUS/Modbus Termination 148
Terminal DM+ and DM- Output Signal Selection 148
3.11 Connect to a PC 149
3.12 External Interlock 150
Drive Ready 150
3.13 Wiring Checklist 151

4. START-UP PROGRAMMING & OPERATION 153
4.1 Section Safety 154
4.2 Using the Digital Operator 155
Digital Operator Keys and Displays 155
LCD Display 156
ALARM (ALM) LED Displays 157
LO/RE LED and RUN LED Indications 157
Menu Structure for Digital Operator 159
4.3 The Drive and Programming Modes 160
Navigating the Drive and Programming Modes 160
Changing Parameter Settings or Values 161
Verifying Parameter Changes: Verify Menu 163
Simplified Setup Using the Setup Group 164
Switching Between LOCAL and REMOTE 165
4.4 Start-Up Flowcharts 166
Flowchart A: Basic Start-Up and Motor Tuning 167
Subchart A-1: Simple Motor Setup Using V/f Control 168
Subchart A-2: High Performance Operation Using OLV or CLV 169
Subchart A-3: Operation with Permanent Magnet Motors 170
4.5 Powering Up the Drive 172
Powering Up the Drive and Operation Status Display 172
4.6 Application Selection 173
Setting 1: Water Supply Pump Application 173
Setting 2: Conveyor Application 174
Setting 3: Exhaust Fan Application 174
Setting 4: HVAC Fan Application 175
Setting 5: Compressor Application 175

4.7 Auto-Tuning 176
Types of Auto-Tuning 176
Before Auto-Tuning the Drive 179
Auto-Tuning Interruption and Fault Codes 181
Auto-Tuning Operation Example 182
T1: Parameter Settings during Induction Motor Auto-Tuning 183
Parameter Settings during PM Motor Auto-Tuning: T2 186
Parameter Settings during Inertia and Speed Control Loop Auto-Tuning: T3 188
4.8 No-Load Operation Test Run 190
No-Load Operation Test Run 190
4.9 Test Run with Load Connected 192
Test Run with the Load Connected 192
4.10 Verifying Parameter Settings and Backing Up Changes 193
Backing Up Parameter Values: o2-03 193
Parameter Access Level: A1-01 193
Password Settings: A1-04, A1-05 194
Copy Function 194
4.11 Test Run Checklist 195

5. PARAMETER DETAILS 197
5.1 A: Initialization 198
A1: Initialization 198
A2: User Parameters 203
5.2 b: Application 205
b1: Operation Mode Selection 205
b2: DC Injection Braking and Short Circuit Braking 213
b3: Speed Search 216
b4: Timer Function 222
b5: PID Control 223
b6: Dwell Function 233
b7: Droop Control (CLV, CLV/PM) 234
b8: Energy Saving 235
b9: Zero Servo 237
5.3 C: Tuning 239
C1: Acceleration and Deceleration Times 239
C2: S-Curve Characteristics 241
C3: Slip Compensation 241
C4: Torque Compensation 244
C5: Automatic Speed Regulator (ASR) 246
C6: Carrier Frequency 251
5.4 d: Reference Settings 255
d1: Frequency Reference 255
d2: Frequency Upper/Lower Limits 257
d3: Jump Frequency 258
d4: Frequency Reference Hold and Up/Down 2 Function 259
d5: Torque Control 264
d6: Field Weakening and Field Forcing 268
d7: Offset Frequency 269
5.5 E: Motor Parameters 270

E1: V/f Pattern for Motor 1 270
E2: Motor 1 Parameters 274
E3: V/f Pattern for Motor 2 277
E4: Motor 2 Parameters 278
E5: PM Motor Settings 280

5.6 F: Option Settings 283

F1: PG Speed Control Card Settings 283
F2: Analog Input Card Settings 286
F3: Digital Input Card Settings 287
F4: Analog Monitor Card Settings 288
F5: Digital Output Card Settings 289
F6 and F7: Communication Option Card 289
CC-Link Parameters 291
MECHATROLINK Parameters 292
PROFIBUS-DP Parameters 293
CANopen Parameters 294
BACnet Parameters 294
DeviceNet Parameters 295
Modbus TCP/IP Parameters 297
PROFINET Parameters 297
EtherNet/IP Parameters 297

5.7 H: Terminal Functions 298

H1: Multi-Function Digital Inputs 298
H2: Multi-Function Digital Outputs 309
H3: Multi-Function Analog Inputs 320
H4: Multi-Function Analog Outputs 326
H5: MEMOBUS/Modbus Serial Communication 328
H6: Pulse Train Input/Output 328

5.8 L: Protection Functions 331

L1: Motor Protection 331
L2: Momentary Power Loss Ride-Thru 338
L3: Stall Prevention 345
L4: Speed Detection 352
L5: Fault Restart 354
L6: Torque Detection 355
L7: Torque Limit 358
L8: Drive Protection 360
L9: Drive Protection 2 366

5.9 n: Special Adjustments 367

n1: Hunting Prevention 367
n2: Speed Feedback Detection Control (AFR) Tuning 368
n3: High Slip Braking (HSB) and Overexcitation Braking 368
n5: Feed Forward Control 371
n6: Online Tuning 373
n8: PM Motor Control Tuning 373

5.10 o: Operator Related Settings 379

o1: Digital Operator Display Selection 379
o2: Digital Operator Keypad Functions 380
o3: Copy Function 382
o4: Maintenance Monitor Settings 383
q: DriveWorksEZ Parameters 385

r: DriveWorksEZ Connection Parameters 385
T: Motor Tuning 385
5.11 U: Monitor Parameters 386
U1: Operation Status Monitors 386
U2: Fault Trace 386
U3: Fault History 386
U4: Maintenance Monitors 386
U5: PID Monitors 386
U6: Operation Status Monitors 386
U8: DriveWorksEZ Monitors 387

6. TROUBLESHOOTING 389
6.1 Section Safety 390
6.2 Motor Performance Fine-Tuning 392
Fine-Tuning V/f Control and V/f Control with PG 392
Fine-Tuning Open Loop Vector Control 393
Fine-Tuning Closed Loop Vector Control 394
Fine-Tuning Open Loop Vector Control for PM Motors 395
Fine-Tuning Advanced Open Loop Vector Control for PM Motors 396
Fine-Tuning Closed Loop Vector Control for PM Motors 396
Parameters to Minimize Motor Hunting and Oscillation 398
6.3 Drive Alarms, Faults, and Errors 399
Types of Alarms, Faults, and Errors 399
Alarm and Error Displays 400
6.4 Fault Detection 404
Fault Displays, Causes, and Possible Solutions 404
6.5 Alarm Detection 425
Alarm Codes, Causes, and Possible Solutions 425
6.6 Operator Programming Errors 434
Operator Programming Error Codes, Causes, and Possible Solutions 434
Causes and Possible Solutions for a Blank and Unresponsive Digital Operator 438
6.7 Auto-Tuning Fault Detection 439
Auto-Tuning Codes, Causes, and Possible Solutions 439
6.8 Copy Function Related Displays 445
Tasks, Errors, and Troubleshooting 445
6.9 Diagnosing and Resetting Faults 447
Fault Occurs Simultaneously with Power Loss 447
If the Drive Still has Power After a Fault Occurs 447
Viewing Fault Trace Data After Fault 447
Fault Reset Methods 448
6.10 Troubleshooting without Fault Display 449
Common Problems 449
Cannot Change Parameter Settings 449
Motor Does Not Rotate Properly after Pressing RUN Button or after Entering External Run Command 450
Motor is Too Hot 451
Drive Does Not Allow Selection of the Desired Auto-Tuning Mode 452
oPE02 Error Occurs When Lowering the Motor Rated Current Setting 452
Motor Stalls during Acceleration or Acceleration Time is Too Long 452

Drive Frequency Reference Differs from the Controller Frequency Reference Command 453
Excessive Motor Oscillation and Erratic Rotation 453
Deceleration Takes Longer Than Expected with Dynamic Braking Enabled 453
Noise From Drive or Motor Cables When the Drive is Powered On 454
Ground Fault Circuit Interrupter (GFCI) Trips During Run 454
Connected Machinery Vibrates When Motor Rotates 454
PID Output Fault 455
Insufficient Starting Torque 455
Motor Rotates after the Drive Output is Shut Off (Motor Rotates During DC Injection Braking) 455
Output Frequency is Not as High as Frequency Reference 455
Sound from Motor 456
Unstable Motor Speed when Using PM 456
Motor Does Not Restart after Power Loss 456

7. PERIODIC INSPECTION & MAINTENANCE 457

7.1 Section Safety 458

7.2 Inspection 460

Recommended Daily Inspection 460
Recommended Periodic Inspection 461
Storage Guidelines 462

7.3 Periodic Maintenance 463

Replacement Parts 463

7.4 Drive Cooling Fans 465

Number of Cooling Fans 465
Cooling Fan Component Names 467
Cooling Fan Replacement: 2A0018 to 2A0081, 4A0007 to 4A0044, and 5A0006 to 5A0032 469
Cooling Fan Replacement: 2A0110, 2A0138, 4A0058, 4A0072, 5A0041, and 5A0052 471
Cooling Fan Replacement: 4A0088 and 4A0103 473
Cooling Fan Replacement: 2A0169 to 2A0415, 4A0139 to 4A0362, and 5A0062 to 5A0242 475
Cooling Fan Replacement: 4A0414 479
Cooling Fan Replacement: 4A0515 and 4A0675 481
Cooling Fan Replacement: 4A0930 and 4A1200 485
Gasket Replacement for Flange Type Enclosure (NEMA 12 Backside) Drives 490

7.5 Replacing the Air Filter 491

Air Filter Replacement 491

7.6 Drive Replacement 493

Serviceable Parts 493
Terminal Board 493
Replacing the Drive 494

8. PERIPHERAL DEVICES & OPTIONS 497

8.1 Section Safety 498

8.2 Drive Options and Peripheral Devices 500

8.3 Connecting Peripheral Devices 502

8.4 Option Installation 503

Prior to Installing the Option 503
PG Option Installation Example 504

8.5 Installing Peripheral Devices 514

Dynamic Braking Options 514

Installing a Molded Case Circuit Breaker (MCCB) or Ground Fault Circuit Interrupter (GFCI) 517
Installing a Magnetic Contactor at the Power Supply Side 517
Connecting an AC Reactor or DC Link Choke 518
Connecting a Surge Absorber 518
Connecting a Noise Filter 519
Installing Input Fuses 520
Attachment for External Heatsink Mounting (IP00 Enclosure) 524
Installing a Motor Thermal Overload (oL) Relay on the Drive Output 524

A. SPECIFICATIONS 527

A.1 Heavy Duty and Normal Duty Ratings 528

A.2 Power Ratings 529

Three-Phase 200 V Class Drive Models 2A0004 to 2A0030 529
Three-Phase 200 V Class Drive Models 2A0040 to 2A0211 530
Three-Phase 200 V Class Drive Models 2A0250 to 2A0415 531
Three-Phase 400 V Class Drive Models 4A0002 to 4A0031 532
Three-Phase 400 V Class Drive Models 4A0038 to 4A0165 533
Three-Phase 400 V Class Drive Models 4A0208 to 4A1200 534
Three-Phase 600 V Class Drive Models 5A0003 to 5A0032 535
Three-Phase 600 V Class Drive Models 5A0041 to 5A0099 536
Three-Phase 600 V Class Drive Models 5A0125 to 5A0242 537

A.3 Drive Specifications 538

A.4 Drive Watt Loss Data 540

A.5 Drive Derating Data 542

Single-Phase Derating 542
Carrier Frequency Derating 549
Temperature Derating 553
Altitude Derating 554

B. PARAMETER LIST 555

B.1 Understanding Parameter Descriptions 556

Control Modes, Symbols, and Terms 556

B.2 Parameter Groups 557

Parameter Differences for Drive Models 4A0930 and 4A1200 558

B.3 A: Initialization Parameters 559

A1: Initialization 559
A2: User Parameters 560

B.4 b: Application 561

b1: Operation Mode Selection 561
b2: DC Injection Braking and Short Circuit Braking 562
b3: Speed Search 563
b4: Timer Function 565
b5: PID Control 566
b6: Dwell Function 568
b7: Droop Control 569
b8: Energy Saving 569
b9: Zero Servo 570

B.5 C: Tuning 571

C1: Acceleration and Deceleration Times 571
C2: S-Curve Characteristics 572

C3: Slip Compensation 572
C4: Torque Compensation 573
C5: Automatic Speed Regulator (ASR) 574
C6: Carrier Frequency 576

B.6 d: References 578

d1: Frequency Reference 578
d2: Frequency Upper/Lower Limits 580
d3: Jump Frequency 580
d4: Frequency Reference Hold and Up/Down 2 Function 580
d5: Torque Control 581
d6: Field Weakening and Field Forcing 582
d7: Offset Frequency 582

B.7 E: Motor Parameters 584

E1: V/f Pattern for Motor 1 584
E2: Motor 1 Parameters 586
E3: V/f Pattern for Motor 2 587
E4: Motor 2 Parameters 588
E5: PM Motor Settings 589

B.8 F: Option Settings 591

F1: PG Speed Control Card (PG-B3, PG-X3, PG-RT3, PG-F3) 591
F2: Analog Input Card Settings (AI-A3) 594
F3: Digital Input Card Settings (DI-A3) 594
F4: Analog Monitor Card Settings (AO-A3) 595
F5: Digital Output Card Settings (DO-A3) 595
F6: Communication Option Card Settings (SI-B3, SI-C3, SI-ES3, SI-ET3, SI-N3, SI-P3, SI-S3, SI-T3, SI-W3) 596
F7: Communication Option Card Settings (SI-EM3, SI-EN3, SI-EP3) 599

B.9 H Parameters: Multi-Function Terminals 603

H1: Multi-Function Digital Inputs 603
H2: Multi-Function Digital Outputs 608
H3: Multi-Function Analog Inputs 613
H4: Analog Outputs 615
H5: MEMOBUS/Modbus Serial Communication 616
H6: Pulse Train Input/Output 617

B.10 L: Protection Function 619

L1: Motor Protection 619
L2: Momentary Power Loss Ride-Thru 621
L3: Stall Prevention 622
L4: Speed Detection 624
L5: Fault Restart 624
L6: Torque Detection 625
L7: Torque Limit 626
L8: Drive Protection 627
L9: Drive Protection 2 629

B.11 n: Special Adjustment 630

n1: Hunting Prevention 630
n2: Speed Feedback Detection Control (AFR) Tuning 630
n3: High Slip Braking (HSB) and Overexcitation Braking 631
n5: Feed Forward Control 632
n6: Online Tuning 632
n8: PM Motor Control Tuning 632

B.12 o: Operator-Related Settings 636
o1: Digital Operator Display Selection..... 636
o2: Digital Operator Keypad Functions 637
o3: Copy Function 638
o4: Maintenance Monitor Settings..... 638
B.13 DriveWorksEZ Parameters 640
q: DriveWorksEZ Parameters..... 640
r: DriveWorksEZ Connection Parameters 640
B.14 T: Motor Tuning 641
T1: Induction Motor Auto-Tuning..... 641
T2: PM Motor Auto-Tuning 643
T3: ASR and Inertia Tuning..... 645
B.15 U: Monitors.....646
U1: Operation Status Monitors 646
U2: Fault Trace..... 649
U3: Fault History..... 650
U4: Maintenance Monitors 651
U5: PID Monitors 653
U6: Operation Status Monitors 654
U8: DriveWorksEZ Monitors..... 656
B.16 Control Mode Dependent Parameter Default Values 657
A1-02 (Motor 1 Control Mode) Dependent Parameters 657
E3-01 (Motor 2 Control Mode) Dependent Parameters 660
B.17 V/f Pattern Default Values.....661
B.18 Defaults by Drive Model and Duty Rating ND/HD.....663
B.19 Parameters Changed by Motor Code Selection (for PM Motors).....680
Yaskawa SMRA Series SPM Motor 680
Yaskawa SSR1 Series IPM Motor (For Derated Torque)..... 681
Yaskawa SST4 Series IPM Motor (For Constant Torque) 690

C. MEMOBUS/MODBUS COMMUNICATIONS..... 701
C.1 MEMOBUS/Modbus Configuration 702
C.2 Communication Specifications.....703
C.3 Connecting to a Network 704
Network Cable Connection..... 704
Wiring Diagram for Multiple Connections 705
Network Termination 706
C.4 MEMOBUS/Modbus Setup Parameters 707
MEMOBUS/Modbus Serial Communication..... 707
C.5 Drive Operations by MEMOBUS/Modbus.....710
Observing the Drive Operation..... 710
Controlling the Drive..... 710
C.6 Communications Timing.....711
Command Messages from Master to Drive..... 711
Response Messages from Drive to Master 711
C.7 Message Format 712
Message Content 712
Slave Address 712

Function Code 712
Data 712
Error Check 712
C.8 Message Examples 714
Reading Drive MEMOBUS/Modbus Register Contents 714
Loopback Test 714
Writing to Multiple Registers 715
C.9 MEMOBUS/Modbus Data Table 716
Command Data 716
Monitor Data 717
Broadcast Messages 728
Fault Trace Contents 729
Alarm Register Contents 731
C.10 Enter Command 732
Enter Command Types 732
Enter Command Settings when Upgrading the Drive 732
C.11 Communication Errors 733
MEMOBUS/Modbus Error Codes 733
Slave Not Responding 733
C.12 Self-Diagnostics 734

D. STANDARDS COMPLIANCE 735
D.1 Section Safety 736
D.2 European Standards 738
CE Low Voltage Directive Compliance 738
EMC Guidelines Compliance 742
D.3 UL and CSA Standards 748
UL Standards Compliance 748
CSA Standards Compliance 764
Drive Motor Overload Protection 764
Precautionary Notes on External Heatsink (IP00/Open Type Enclosure) 766
D.4 Safe Disable Input Function 768
Specifications 768
Precautions 768
Using the Safe Disable Function 768

E. QUICK REFERENCE SHEET 771
E.1 Drive and Motor Specifications 772
Drive Specifications 772
Motor Specifications 772
E.2 Basic Parameter Settings 774
Basic Setup 774
V/f Pattern Setup 774
Motor Setup 774
Multi-Function Digital Inputs 775
Pulse Train Input/Analog Inputs 775
Multi-Function Digital Outputs 775
Monitor Outputs 775
E.3 User Setting Table 776

INDEX 787

i

Preface & General Safety

This section provides safety messages pertinent to this product that, if not heeded, may result in fatality, personal injury, or equipment damage. Yaskawa is not responsible for the consequences of ignoring these instructions.

i.1 PREFACE.....18

i.2 GENERAL SAFETY.....20

i.1 Preface

Yaskawa manufactures products used as components in a wide variety of industrial systems and equipment. The selection and application of Yaskawa products remain the responsibility of the equipment manufacturer or end user. Yaskawa accepts no responsibility for the way its products are incorporated into the final system design. Under no circumstances should any Yaskawa product be incorporated into any product or design as the exclusive or sole safety control. Without exception, all controls should be designed to detect faults dynamically and fail safely under all circumstances. All systems or equipment designed to incorporate a product manufactured by Yaskawa must be supplied to the end user with appropriate warnings and instructions as to the safe use and operation of that part. Any warnings provided by Yaskawa must be promptly provided to the end user. Yaskawa offers an express warranty only as to the quality of its products in conforming to standards and specifications published in the Yaskawa manual. NO OTHER WARRANTY, EXPRESS OR IMPLIED, IS OFFERED. Yaskawa assumes no liability for any personal injury, property damage, losses, or claims arising from misapplication of its products.

This manual is designed to ensure correct and suitable application of A1000-Series Drives. Read this manual before attempting to install, operate, maintain, or inspect a drive and keep it in a safe, convenient location for future reference. Be sure you understand all precautions and safety information before attempting application.

◆ Applicable Documentation

The following manuals are available for A1000 series drives:

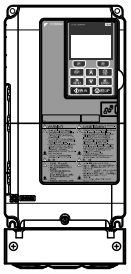	A1000 Series AC Drive Quick Start Guide (TOEPC71061641)
	Read this guide first. This guide is packaged together with the product and contains basic information on safety precautions, model list, and wiring. Use this manual for basic settings and trial operation. The purpose of this guide is to prepare the drive for a trial run with an application and for basic operation. This manual is available for download on our documentation website, www.yaskawa.com.
	A1000 Series AC Drive Technical Manual (SIEPC71061641)
	The manual contains information required to install and wire the drive, in addition to an overview of fault diagnostics, maintenance safety, and parameter settings. Contact a Yaskawa representative to obtain the manual. The most recent version of this manual is available for download on our documentation website, www.yaskawa.com.

◆ Symbols

Note: Indicates a supplement or precaution that does not cause drive damage.

TERMS **Indicates a term or definition used in this manual.**

◆ Terms and Abbreviations

- **Drive:** Yaskawa A1000-Series Drive
- **BCD:** Binary Coded Decimal
- **H:** Hexadecimal Number Format
- **IGBT:** Insulated Gate Bipolar Transistor
- **kbps:** Kilobits per Second
- **MAC:** Media Access Control
- **Mbps:** Megabits per Second
- **PG:** Pulse Generator
- **r/min:** Revolutions per Minute
- **V/f:** V/f Control
- **V/f w/PG:** V/f Control with PG
- **OLV:** Open Loop Vector Control
- **CLV:** Closed Loop Vector Control
- **OLV/PM:** Open Loop Vector Control for PM
- **AOLV/PM:** Advanced Open Loop Vector Control for PM
- **CLV/PM:** Closed Loop Vector Control for PM
- **PM motor:** Permanent Magnet Synchronous motor (an abbreviation for IPM motor or SPM motor)
- **IPM motor:** Interior Permanent Magnet Motor (e.g., Yaskawa SSR1 Series and SST4 Series motors)
- **SPM motor:** Surface mounted Permanent Magnet Motor (e.g., Yaskawa SMRA Series motors)

◆ Trademarks

- BACnet is a trademark of the American Society of Heating, Refrigerating, and Air-Conditioning Engineers (ASHRAE).
- CANopen is a trademark of CAN in Automation (CiA).
- CC-Link is a trademark of CC-Link Partner Association (CLPA).
- DeviceNet is a trademark of Open DeviceNet Vendor Association, Inc. (ODVA).
- EtherCAT is a trademark of Beckhoff Automation GmbH, Germany.
- EtherNet/IP is a trademark of Open DeviceNet Vendor Association, Inc. (ODVA).
- LonWorks is a trademark of Echelon Corporation.
- MECHATROLINK-I, MECHATROLINK-II, and MECHATROLINK-III are trademarks of MECHATROLINK Members Association (MMA).
- Modbus is a trademark of Schneider Electric.
- PROFIBUS-DP is a trademark of PROFIBUS International (PI).
- PROFNET is a trademark of PROFIBUS International (PI).
- Other companies and product names mentioned in this manual are trademarks of those companies.

i.2 General Safety

◆ Supplemental Safety Information

General Precautions
• The diagrams in this manual may be indicated without covers or safety shields to show details. Replace the covers or shields before operating the drive and run the drive according to the instructions described in this manual. • Any illustrations, photographs, or examples used in this manual are provided as examples only and may not apply to all products to which this manual is applicable. • The products and specifications described in this manual or the content and presentation of the manual may be changed without notice to improve the product and/or the manual. • When ordering a new copy of the manual due to damage or loss, contact Yaskawa or a Yaskawa representative and provide the manual number shown on the front cover. • If nameplate becomes worn or damaged, order a replacement from Yaskawa or a Yaskawa representative.

⚠ WARNING

Read and understand this manual before installing, operating or servicing this drive. The drive must be installed according to this manual and local codes.

The following conventions are used to indicate safety messages in this manual. Failure to heed these messages could result in serious or fatal injury or damage to the products or to related equipment and systems.

⚠ DANGER

Indicates a hazardous situation, which, if not avoided, will result in death or serious injury.

⚠ WARNING

Indicates a hazardous situation, which, if not avoided, could result in death or serious injury.

WARNING! *may also be indicated by a bold key word embedded in the text followed by an italicized safety message.*

⚠ CAUTION

Indicates a hazardous situation, which, if not avoided, could result in minor or moderate injury.

CAUTION! *may also be indicated by a bold key word embedded in the text followed by an italicized safety message.*

NOTICE

Indicates a property damage message.

NOTICE: *may also be indicated by a bold key word embedded in the text followed by an italicized safety message.*

◆ Safety Messages

⚠ DANGER

Heed the safety messages in this manual.

Failure to comply will result in death or serious injury.

The operating company is responsible for any injuries or equipment damage resulting from failure to heed the warnings in this manual.

Electrical Shock Hazard

Before servicing, disconnect all power to the equipment.

The internal capacitor remains charged even after the power supply is turned off. The charge indicator LED will extinguish when the DC bus voltage is below 50 Vdc. To prevent electric shock, wait for at least the time specified on the warning label, once all indicators are OFF, measure for unsafe voltages to confirm the drive is safe prior to servicing.

Failure to comply will result in death or serious injury.

⚠ WARNING

Sudden Movement Hazard

System may start unexpectedly upon application of power, resulting in death or serious injury.

Clear all personnel from the drive, motor and machine area before applying power. Secure covers, couplings, shaft keys and machine loads before applying power to the drive.

When using DriveWorksEZ to create custom programming, the drive I/O terminal functions change from factory settings and the drive will not perform as outlined in this manual.

Unpredictable equipment operation may result in death or serious injury.

Take special note of custom I/O programming in the drive before attempting to operate equipment.

Electrical Shock Hazard

Do not attempt to modify or alter the drive in any way not explained in this manual.

Failure to comply could result in death or serious injury.

Yaskawa is not responsible for any modification of the product made by the user. This product must not be modified.

Do not allow unqualified personnel to use equipment.

Failure to comply could result in death or serious injury.

Installation, maintenance, inspection, and service must be performed only by authorized personnel familiar with installation, adjustment and maintenance of AC drives.

Do not remove covers or touch circuit boards while the power is on.

Failure to comply could result in death or serious injury.

Make sure the protective earthing conductor complies with technical standards and local safety regulations.

Because the leakage current exceeds 3.5 mA in models 4A0414 and larger, IEC/EN 61800-5-1 states that either the power supply must be automatically disconnected in case of discontinuity of the protective earthing conductor or a protective earthing conductor with a cross-section of at least 10 mm^2 (Cu) or 16 mm^2 (Al) must be used. Failure to comply may result in death or serious injury.

Always use appropriate equipment for Ground Fault Circuit Interrupters (GFCIs).

The drive can cause a residual current with a DC component in the protective earthing conductor. Where a residual current operated protective or monitoring device is used for protection in case of direct or indirect contact, always use a type B GFCI according to IEC/EN 60755.

Fire Hazard

Do not use an improper voltage source.

Failure to comply could result in death or serious injury by fire.

Verify that the rated voltage of the drive matches the voltage of the incoming power supply before applying power.

⚠ WARNING

Install adequate branch circuit protection according to applicable local codes and this Installation Manual. Failure to comply could result in fire and damage to the drive or injury to personnel.

The device is suitable for use on a circuit capable of delivering not more than 100,000 RMS symmetrical amperes, 240 Vac maximum (200 V class) and 480 Vac maximum (400 V class), and 600 Vac maximum (600 V class) when protected by branch circuit protection devices specified in this document.

Crush Hazard

Do not use this drive in lifting applications without installing external safety circuitry to prevent accidental dropping of the load.

The drive does not possess built-in load drop protection for lifting applications.

Failure to comply could result in death or serious injury from falling loads.

Install electrical and/or mechanical safety circuit mechanisms independent of drive circuitry.

⚠ CAUTION

Crush Hazard

Do not carry the drive by the front cover.

Failure to comply may result in minor or moderate injury from the main body of the drive falling.

NOTICE

Observe proper electrostatic discharge procedures (ESD) when handling the drive and circuit boards. Failure to comply may result in ESD damage to the drive circuitry.

Do not perform a withstand voltage test or megger test on any part of the drive.

Failure to comply could result in damage to the sensitive devices within the drive.

Do not operate damaged equipment.

Failure to comply could result in further damage to the equipment. Do not connect or operate any equipment with visible damage or missing parts.

If a fuse is blown or a Ground Fault Circuit Interrupter (GFCI) is tripped, check the wiring and the selection of the peripheral devices.

Check for short circuits or ground faults on the secondary side of fuses and GFCIs and check the wiring and the selection of peripheral devices. Remove the cause of the problem and then turn the power supply off and on again. If the cause cannot be identified, do not turn on the power supply or attempt to operate the equipment.

Do not restart the drive immediately operate the peripheral devices if a fuse is blown or a GFCI is tripped.

Check the wiring and the selection of peripheral devices to identify the cause. Contact Yaskawa or a Yaskawa representative before restarting the drive or the peripheral devices if the cause cannot be identified.

Do not expose the drive to halogen group disinfectants.

Failure to comply may cause damage to the electrical components in the drive.

Do not pack the drive in wooden materials that have been fumigated or sterilized. Do not sterilize the entire package after the product is packed.

◆ General Application Precautions

■ Selection

Installing a Reactor

Use an AC reactor or DC link choke in the following situations:

- to suppress harmonic current.
- to smooth peak current that results from capacitor switching.
- when the power supply is above 600 kVA.
- when the drive is running from a power supply system with thyristor converters.

Note: A DC link choke is built in to drive models 2A0110 to 2A0415, 4A0058 to 4A1200, and 5A0041 to 5A0242.

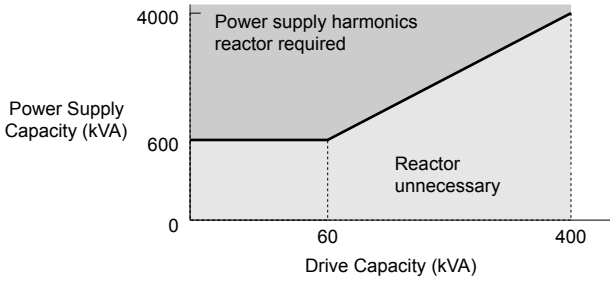

Figure i.1 Installing a Reactor

Drive Capacity

For specialized motors, make sure that the motor rated current is less than the rated output current for the drive.

When running more than one motor in parallel from a single drive, the capacity of the drive should be larger than [total motor rated current × 1.1].

Starting Torque

The overload rating for the drive determines the starting and accelerating characteristics of the motor. Expect lower torque than when running from line power. To achieve a higher starting torque, use a larger drive or a drive and motor with larger capacity.

Emergency Stop

During a drive fault condition, the output shuts off but the motor does not stop immediately. A mechanical brake may be required when it is necessary to stop the motor faster than the ability of the Fast Stop function of the drive.

Options

NOTICE: *The B1, B2, ⊖, ⊕1, ⊕2, and ⊕3 terminals are used to connect optional drive-specific compatible devices only. Connecting non-Yaskawa-approved devices to these terminals may damage the drive.*

Repetitive Starting/Stopping

Laundry machines, punching presses, and other applications with frequent starts and stops often approach 150% of their rated output current values. Heat stress generated from repetitive high current will shorten the life span of the IGBTs.

Yaskawa recommends lowering the carrier frequency, particularly when audible noise is not a concern. It is beneficial to reduce the load, increase the acceleration and deceleration times, or switch to a larger drive to help keep peak current levels under 150%. Be sure to check the peak current levels when starting and stopping repeatedly during the initial test run, and make adjustments accordingly.

■ Installation

Enclosure Panels

Keep the drive in a clean environment by installing the drive in an enclosure panel or selecting an installation area free of airborne dust, lint, and oil mist. Be sure to leave the required space between drives to provide for cooling, and take proper measures so the ambient temperature remains within allowable limits and keep flammable materials away from the drive. Yaskawa offers protective designs for drives that must be used in areas subjected to oil mist and excessive vibration. Contact Yaskawa or a Yaskawa representative for details.

Installation Direction

NOTICE: *Install the drive upright as specified in the manual. Refer to the Mechanical Installation section for more information on installation. Failure to comply may damage the drive due to improper cooling.*

■ Settings

Motor Code

When using OLV/PM, set the proper motor code to parameter E5-01 before performing a trial run.

Upper Limits

NOTICE: *The drive is capable of running the motor up to 400 Hz. Be sure to set the upper limit for the frequency of the drive to prevent the possible danger of accidentally operating equipment at higher than rated speed. The default setting for the maximum output frequency is 60 Hz.*

DC Injection Braking

NOTICE: *Excessive current during DC Injection Braking and excessive duration of DC Injection Braking can cause motor overheat.*

Acceleration/Deceleration Times

Acceleration and deceleration times are affected by the amount of torque generated by the motor, the load torque, and the moment of inertia. Set a longer accel/decel time when Stall Prevention is enabled. The accel/decel times are lengthened for as long as the Stall Prevention function is in operation. Install one of the available braking options or increase the capacity of the drive for faster acceleration and deceleration.

■ General Handling

Wiring Check

NOTICE: *Do not connect power supply lines to output terminals U/T1, V/T2, or W/T3. Failure to comply will destroy the drive. Be sure to perform a final check of all sequence wiring and other connections before turning on the power and also check for short circuits on the control terminals, which may damage the drive.*

Selecting a Circuit Breaker or Circuit Interrupter

Yaskawa recommends installing a Ground Fault Circuit Interrupter (GFCI) to the power supply side. The GFCI should be designed for use with AC drives (e.g., Type B according to IEC/EN 60755).

Select a Molded Case Circuit Breaker (MCCB) or GFCI with a rated current 1.5 to 2 times higher than the drive rated current to avoid nuisance trips caused by harmonics in the drive input current. ***Refer to Installing a Molded Case Circuit Breaker (MCCB) or Ground Fault Circuit Interrupter (GFCI) on page 517*** for more information.

NOTICE: *Prevent Equipment Damage. Install a fuse and a GFCI in models 4A0930 and 4A1200. Failure to comply may result in serious damage to the facilities if the drive is defective.* ***Refer to Wiring Fuses for Models 4A0930 and 4A1200 on page 127*** *for details.*

Magnetic Contactor Installation

WARNING! *Fire Hazard. Shut off the drive with a magnetic contactor (MC) when a fault occurs in any external equipment such as braking resistors.* ***Refer to Installing a Magnetic Contactor at the Power Supply Side on page 517****. Failure to comply may cause resistor overheating, fire, and injury to personnel.*

NOTICE: *To get the full performance life out of the electrolytic capacitors and circuit relays, refrain from switching the drive power supply off and on more than once every 30 minutes. Frequent use can damage the drive. Use the drive to stop and start the motor.*

Inspection and Maintenance

WARNING! *Electrical Shock Hazard. Capacitors in the drive do not immediately discharge after shutting off the power. Wait for at least the amount of time specified on the drive before touching any components after shutting off the power. Failure to comply may cause injury to personnel from electrical shock.*

WARNING! *Electrical Shock Hazard. When a drive is running a PM motor, voltage continues to be generated at the motor terminals after the drive is shut off while the motor coasts to stop. Take the precautions described below to prevent shock and injury:*
· In applications where the machine can still rotate after the drive has fully stopped a load, install a switch to the drive output side to disconnect the motor and the drive.
· Do not allow an external force to rotate the motor beyond the maximum allowable speed or to rotate the motor when the drive has been shut off.
· Wait for at least the time specified on the warning label after opening the load switch on the output side before inspecting the drive or performing any maintenance.
· Do not open and close the load switch while the motor is running.
· If the motor is coasting, make sure the power to the drive is turned on and the drive output has completely stopped before closing the load switch.

WARNING! *Burn Hazard. Because the heatsink can get very hot during operation, take proper precautions to prevent burns. When replacing the cooling fan, shut off the power and wait at least 15 minutes to be sure that the heatsink has cooled down. Failure to comply may cause burn injury to personnel.*

Wiring

Yaskawa recommends using ring terminals on all drive models. Drive models 2A0069 to 2A0415 and 4A0058 to 4A1200 require the use of use ring terminals for UL/cUL compliance. Use only the tools recommended by the terminal manufacturer for crimping.

Transporting the Drive

NOTICE: *Never steam clean the drive. During transport, keep the drive from coming into contact with salts, fluorine, bromine, phthalate ester, and other such harmful chemicals.*

◆ Motor Application Precautions

■ Standard Induction Motors

Low-Speed Range

The cooling fan of a standard motor should sufficiently cool the motor at the rated speed. As the self-cooling capability of such a motor decreases with the speed, applying full torque at low speed will possibly damage the motor. Reduce the load torque as the motor slows to prevent motor damage from overheat. ***Figure i.2*** shows the allowable load characteristics for a Yaskawa standard motor. Use a motor designed specifically for operation with a drive when 100% continuous torque is needed at low speeds.

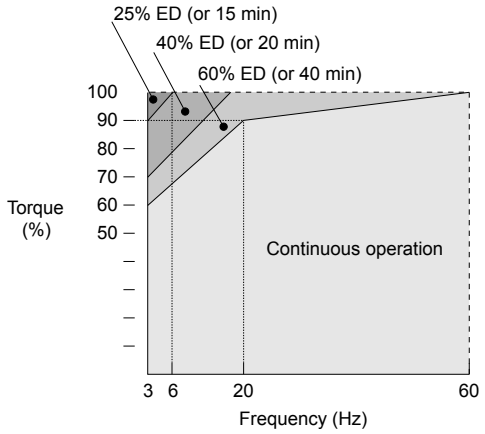

Figure i.2 Allowable Load Characteristics for a Yaskawa Motor

Insulation Tolerance

NOTICE: *Consider motor voltage tolerance levels and motor insulation in applications with an input voltage of over 440 V or particularly long wiring distances.*

High-Speed Operation

NOTICE: *Problems may occur with the motor bearings and dynamic balance of the machine when operating a motor beyond its rated speed. Contact the motor or machine manufacturer.*

Torque Characteristics

Torque characteristics differ compared to operating the motor directly from line power. The user should have a full understanding of the load torque characteristics for the application.

Vibration and Shock

The drive allows selection of high carrier PWM control and low carrier PWM. Selecting high carrier PWM can help reduce motor oscillation.

- Take particular caution when adding a variable speed drive to an application running a motor from line power at a constant speed. If resonance occurs, install shock-absorbing rubber around the base of the motor and enable the Jump frequency selection to prevent continuous operation in the resonant frequency range.
- Mechanical resonance can occur with long motor shafts and in applications such as turbines, blowers, and fans with high inertia loads. Use Closed Loop Vector Control when these applications experience mechanical resonance problems.

Audible Noise

The audible noise of the motor varies based on the carrier frequency setting. However, drive current derating may be required. When using a high carrier frequency, audible noise from the motor is comparable to the motor noise generated when running from line power.

■ Synchronous Motors

- Contact Yaskawa or a Yaskawa agent when planning to use a synchronous motor not endorsed by Yaskawa.
- Use a standard induction motor when running multiple synchronous motors simultaneously. A single drive does not have this capability.
- A synchronous motor may rotate slightly in the opposite direction of the Run command at start depending on parameter settings and rotor position.
- The amount of generated starting torque differs depending on the control mode and motor type. Set up the motor with the drive after verifying the starting torque, allowable load characteristics, impact load tolerance, and speed control range.

  Contact Yaskawa or a Yaskawa agent when planning to use a motor that does not fall within these specifications:
- In Open Loop Vector Control for PM motors, braking torque is less than 125% when running between 20% and 100% speed, even with a braking resistor. Braking torque drops to less than 50% when running at less than 20% speed.
- In Open Loop Vector Control for PM motors, the allowable load inertia moment is approximately 50 times higher than the motor inertia moment.

  Contact Yaskawa or a Yaskawa agent for questions concerning applications with a larger inertia moment.
- When using a holding brake in Open Loop Vector Control for PM motors, release the brake prior to starting the motor. Failure to set the proper timing can cause speed loss.
- To restart a coasting motor rotating over 200 Hz while in V/f Control, first use the Short Circuit Braking function to bring the motor to a stop. Short Circuit Braking requires a special braking resistor. Contact Yaskawa or a Yaskawa agent for details.
- To restart a coasting motor rotating below 200 Hz, use the Speed Search function if the motor cable is not too long. If the motor cable is relatively long, stop the motor using Short Circuit Braking.
- If oC (Overcurrent), STo (Pull-Out Detection), or LSo (LSo Fault) occur, retry Speed Search and use the Short Circuit Braking function when starting to adjust the motor.

Specialized Motors

Multi-Pole Motor

The rated current of a multi-pole motor differs from that of a standard motor, so be sure to check the maximum current when selecting a drive. Always stop the motor before switching between the number of motor poles. The motor will coast to stop if a regenerative overvoltage (ov) fault occurs or if overcurrent (oC) protection is triggered.

Submersible Motor

The rated current of a submersible motor is greater than that of a standard motor, so select the drive accordingly. Use a motor cable large enough to avoid decreasing the maximum torque level from voltage drop caused by a long motor cable.

Explosion-Proof Motor

The motor and the drive must be tested together to be certified as explosion-proof. The drive is not designed for explosion-proof areas.

When attaching an encoder to an explosion-proof motor, make sure the encoder is also explosion-proof. Use an insulating signal converter to connect the encoder signal lines to the speed feedback option card.

Geared Motor

Make sure that the gear and the lubricant are rated for the desired speed range to avoid gear damage when operating at low speeds or very high speeds. Consult with the manufacturer for applications that require operation outside the rated speed range of the motor or gear box.

Single-Phase Motor

Variable speed drives are not designed to operate with single phase motors. Using capacitors to start the motor causes a high-frequency current to flow to the capacitors and can damage the capacitors. A split-phase start or a repulsion start can burn out the starter coils because the internal centrifugal switch is not activated. The drive is for use with three-phase motors only.

Motor with Brake

Take caution when using the drive to operate a motor with a built-in holding brake. If the brake is connected to the output side of the drive, it may not release at start due to low voltage levels, so be sure to install a separate power supply for the motor brake. Note that motors with built-in brakes tend to generate a fair amount of noise when running at low speeds.

■ Notes on Power Transmission Machinery

Installing an AC drive in machinery that was previously connected directly to the power supply will allow the machine to operate at variable speeds. Continuous operation outside of the rated speeds can wear out lubrication material in gear boxes and other power transmission parts. Make sure that lubrication is sufficient within the entire speed range to avoid machine damage. Note that operation above the rated speed can increase the noise generated by the machine.

◆ Drive Label Warning Example

Always heed the warning information listed in ***Figure i.3*** in the position shown in ***Figure i.4***.

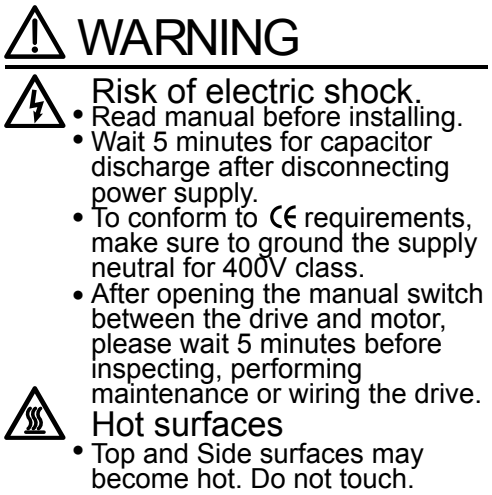

Figure i.3 Warning Information Example

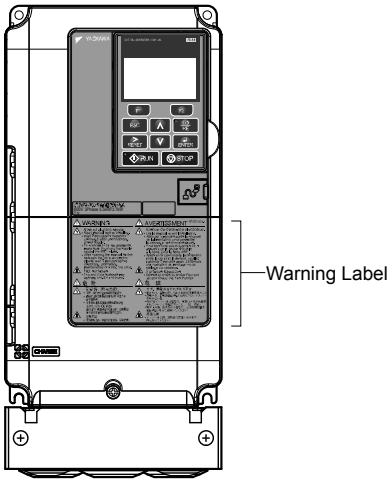

Figure i.4 Warning Information Position

◆ Warranty Information

■ Restrictions

The drive is not designed or manufactured for use in devices or systems that may directly affect or threaten human lives or health.

Customers who intend to use the product described in this manual for devices or systems relating to transportation, health care, space aviation, atomic power, electric power, or in underwater applications must first contact Yaskawa or a Yaskawa representative.

WARNING! *Injury to Personnel. This product has been manufactured under strict quality-control guidelines. However, if this product is to be installed in any location where failure of this product could involve or result in a life-and-death situation or loss of human life or in a facility where failure may cause a serious accident or physical injury, safety devices must be installed to minimize the likelihood of any accident.*

1

Receiving

This chapter explains how to inspect the drive upon receipt, and gives an overview of the different enclosure types and components.

1.1 SECTION SAFETY.....30
1.2 GENERAL DESCRIPTION.....31
1.3 MODEL NUMBER AND NAMEPLATE CHECK.....35
1.4 DRIVE MODELS AND ENCLOSURE TYPES.....39
1.5 COMPONENT NAMES.....41

1.1 Section Safety

⚠ CAUTION

Do not carry the drive by the front cover or the terminal cover.

Failure to comply may cause the main body of the drive to fall, resulting in minor or moderate injury.

NOTICE

Observe proper electrostatic discharge procedures (ESD) when handling the drive and circuit boards.

Failure to comply may result in ESD damage to the drive circuitry.

A motor connected to a PWM drive may operate at a higher temperature than a utility-fed motor and the operating speed range may reduce motor cooling capacity.

Ensure that the motor is suitable for drive duty and/or the motor service factor is adequate to accommodate the additional heating with the intended operating conditions.

1.2 General Description

◆ A1000 Model Selection

Refer to *Table 1.1* for drive selection depending on the motor power and Normal Duty (ND) or Heavy Duty (HD) rating.

Note: The models and capacities in shown here are based on standard settings and operation conditions. Higher carrier frequencies and higher ambient temperatures require derating.

Table 1.1 A1000 Models

Motor Power HP	Three-Phase 200 V Class				Three-Phase 400 V Class				Three-Phase 600 V Class			
	Heavy Duty Rating		Normal Duty Rating		Heavy Duty Rating		Normal Duty Rating		Heavy Duty Rating		Normal Duty Rating	
	Drive Model	Rated Output Current (A)	Drive Model	Rated Output Current (A) <3>	Drive Model	Rated Output Current (A)	Drive Model	Rated Output Current (A) <3>	Drive Model	Rated Output Current (A)	Drive Model	Rated Output Current (A) <3>
0.75	2A0004	3.2 <1>	2A0004	3.5	4A0002	1.8 <1>	4A0002	2.1	–	–	–	–
1	2A0006	5 <1>	2A0006	6	–	–	–		5A0003	1.7	–	–
2	2A0008	6.9 <1>	2A0008	8	4A0004	3.4 <1>	4A0004	4.1	5A0004	3.5	5A0003	2.7
	2A0010	8 <1>	–	–	–	–	–	–	–	–	–	–
3	–	–	–	–	4A0005	4.8 <1>	–	–	–	–	–	–
	2A0012	11 <1>	2A0010	9.6	4A0007	5.5 <1>	4A0005	5.4	5A0006	4.1	5A0004	3.9
	2A0018	14 <1>	2A0012	12	–	–	4A0007	6.9	–	–	–	–
5		–	–	–	4A0009	7.2 <1>	–	–	–	–	–	–
	2A0021	17.5 <1>	2A0018	17.5	4A0011	9.2 <1>	4A0009	8.8	5A0009	6.3	5A0006	6.1
7.5	2A0030	25 <1>	2A0021	21	4A0018	14.8 <1>	4A0011	11.1	5A0011	9.8	5A0009	9
10	2A0040	33 <1>	2A0030	30	4A0023	18 <1>	4A0018	17.5	5A0017	12.5	5A0011	11
15	2A0056	47 <1>	2A0040	40	4A0031	24 <1>	4A0023	23	5A0022	17	5A0017	17
20	2A0069	60 <1>	2A0056	56	4A0038	31 <1>	4A0031	31	5A0027	22	5A0022	22
25	2A0081	75 <1>	2A0069	69	–	–	4A0038	38	5A0032	27	5A0027	27
25-30	–	–	–	–	4A0044	39 <1>	–	–	–	–	–	–
	–	–	–	–	4A0058	45 <1>	–	–	5A0041	32	–	–
30	2A0110	85 <1>	2A0081	81	–	–	4A0044	44	–	–	5A0032	32
40	2A0138	115 <1>	2A0110	110	4A0072	60 <1>	4A0058	58	5A0052	41	5A0041	41
50	2A0169	145 <2>	2A0138	138	–	–	4A0072	72			5A0052	52
50-60	–	–	–	–	4A0088	75 <1>	–	–	5A0062	52	–	–
	–	–	–	–	4A0103	91 <1>	–	–	5A0077	62	–	–
60	2A0211	180 <2>	2A0169	169	–	–	4A0088	88	–	–	5A0062	62
75	2A0250	215 <2>	2A0211	211	4A0139	112 <2>	4A0103	103	5A0099	77	5A0077	77
100	2A0312	283 <2>	2A0250	250	4A0165	150 <2>	4A0139	139	5A0125	99	5A0099	99
125	2A0360	346 <2>	2A0312	312	–	–	4A0165	165	5A0145	130	5A0125	125
125-150	–	–	–	–	4A0208	180 <2>	–	–	–	–	–	–
150	2A0415	415 <2>	2A0360	360	4A0250	216 <2>	4A0208	208	5A0192	172	5A0145	145
175	–	–	2A0415	415	–	–	–	–	–	–	–	–
200	–	–	–	–	4A0296	260 <2>	4A0250	250	5A0242	200	5A0192	192
250	–	–	–	–	4A0362	304 <2>	4A0296	296	–	–	5A0242	242
300	–	–	–	–	4A0414	370 <2>	4A0362	362	–	–	–	–
350	–	–	–	–	4A0515	450 <3>	4A0414	414	–	–	–	–
400-450	–	–	–	–	–	–	4A0515	515	–	–	–	–

Motor Power HP	Three-Phase 200 V Class				Three-Phase 400 V Class				Three-Phase 600 V Class			
	Heavy Duty Rating		Normal Duty Rating		Heavy Duty Rating		Normal Duty Rating		Heavy Duty Rating		Normal Duty Rating	
	Drive Model	Rated Output Current (A)	Drive Model	Rated Output Current (A) <3>	Drive Model	Rated Output Current (A)	Drive Model	Rated Output Current (A) <3>	Drive Model	Rated Output Current (A)	Drive Model	Rated Output Current (A) <3>
400-450-500	–	–	–	–	4A0675	605 <3>	–	–	–	–	–	–
500-550	–	–	–	–	–	–	4A0675	675	–	–	–	–
650	–	–	–	–	4A0930	810 <3>	–	–	–	–	–	–
750	–	–	–	–	–	–	4A0930	930	–	–	–	–
900	–	–	–	–	4A1200	1090 <3>	–	–	–	–	–	–
1000	–	–	–	–	–	–	4A1200	1200	–	–	–	–

<1> These values assume the carrier frequency is not set higher than 8 kHz.

<2> These values assume the carrier frequency is not set higher than 5 kHz.

<3> These values assume the carrier frequency is set to 2 kHz.

Note: Current derating is required when setting the carrier frequency higher. *Refer to Carrier Frequency Derating on page 549* for details.

◆ Control Mode Selection

Table 1.2 gives an overview of the A1000 control modes and their various features.

Table 1.2 Control Modes and their Features

Motor Type		Induction Motors				Permanent Magnet Motors			Comments
Control Mode		V/f	V/f w/PG	OLV	CLV	OLV/PM	AOLV/PM	CLV/PM	–
Parameter Setting		A1-02 = 0	A1-02 = 1	A1-02 = 2	A1-02 = 3	A1-02 = 5	A1-02 = 6	A1-02 = 7	Default Setting is OLV control (A1-02 =2)
Basic Description		V/f control	V/f control using motor speed feedback	Open Loop Vector control	Closed Loop Vector control	Open Loop Vector control for PM motors	Open Loop Vector control for IPM motors	Closed Loop Vector control for PM motors	–
Type of Applications	Motor Type	IM	IM	IM	IM	PM	IPM	PM	–
	Multi Motor	YES	–	–	–	–	–	–	–
	Motor data unknown	YES	–	–	–	–	–	–	–
	High Speed Accuracy	–	YES	YES	YES	YES	YES	YES	–
	High Speed Response	–	–	YES	YES	–	YES	YES	–
	Zero Speed Control	–	–	–	YES	–	YES	YES	–
	Torque Control Operation	–	–	–	YES	–	–	YES	–
	Torque Limit Operation	–	–	YES	YES	–	–	YES	–
PG Option Card		–	PG-B3 or PG-X3	–	PG-B3 or PG-X3	–	–	PG-X3	–

Motor Type		Induction Motors				Permanent Magnet Motors			Comments
Control Characteristics	Speed Control Range	1:40	1:40	1:200	1:1500	1:20	1:20 1:100	1:1500	May fluctuate with characteristics and motor temperature. May fluctuate with characteristics and motor temperature. Enabled for 1:100 when n8-57, High Frequency Injection, is set to 1 (Enabled).
	Speed Accuracy	±2 to 3%	±0.03%	±0.2%	±0.02%	±0.2%	±0.2%	±0.02%	Induction Motor: Speed deviation rate between speed reference value and motor speed (100% = rated speed, motor temperature 25 °C ±10 °C) when operating at normal status and when load is stable. PM motor: Speed deviation when operating at constant speed may fluctuate with characteristics and motor temperature (25 °C ± 10 °C).
	Speed Response	3 Hz (approx.)	3 Hz (approx.)	10 Hz	50 Hz	10 Hz	10 Hz	50 Hz	Max. frequency of a speed reference signal that the drive can follow may fluctuate with characteristics and motor temperature.
	Starting Torque	150% at 3 Hz	150% at 3 Hz	200% at 0.3 Hz	200% at 0 r/min	100% at 5% speed	100% at 5% speed 200% at 0 r/min	200% at 0 r/min	Starting torque may fluctuate with characteristics and motor temperature. Performance may differ by capacity. 200% at 0 r/min enabled when n8-57, High Frequency Injection, is set to 1 (Enabled).
Application-Specific	Auto-Tuning	• Energy Saving Tuning • Line to line resistance	• Energy Saving Tuning • Line to line resistance	• Rotational • Stationary • Line to line resistance	• Rotational • Stationary • Line to line resistance • ASR • Inertia	• Stationary • Stator resistance	• Stationary • Stator resistance	• Stationary • Stator resistance • ASR • Inertia • Encoder offset • Back EMF Constant	Automatically adjusts parameter settings that concern electrical characteristics of the motor.
	Torque Limit	–	–	YES	YES	–	YES	YES	Sets the maximum torque for the motor to protect the load and connected machinery.
	Torque Control	–	–	–	YES	–	–	YES	Allows direct control of motor torque for tension control and other such applications.

Motor Type		Induction Motors				Permanent Magnet Motors			Comments
Application-Specific	**Droop Function**	–	–	–	YES	–	–	YES	Sets the slip for the load torque of the motor. Used for motor load distribution.
	Zero Servo Control	–	–	–	YES	–	–	YES	Locks the rotor position.
	Speed Search	YES	YES	YES	–	YES	YES	YES	Bi-directional speed detection of a coasting motor to restart it without stopping.
	Energy-Saving Control	YES	YES	YES	YES	–	YES (IPM motors only)	YES (IPM motors only)	Saves energy by always operating the motor at its maximum efficiency.
	High Slip Braking	YES	YES	–	–	–	–	–	Increases motor loss to allow for faster deceleration than normal without a braking resistor. Effectiveness may vary based on motor characteristics.
	Feed Forward Control	–	–	–	YES	–	–	YES	Improves speed accuracy when the load changes by compensating effects of the system inertia.
	Kinetic Energy Buffering	YES	YES	YES	YES	YES	YES	YES	Decelerates the drive to allow it to ride through a momentary power loss and continue operation.
	Over-excitation Deceleration	YES	YES	YES	YES	–	–	–	Provides fast deceleration without using a braking resistor.
	Inertia Tuning, ASR Tuning	–	–	–	YES	–	–	YES	Provides automatic Speed Control and Feed Forward function tuning.
	Overvoltage Suppression	YES	YES	YES	YES	YES	YES	YES	Prevents overvoltage by increasing speed during regeneration.
	High Frequency Injection	–	–	–	–	–	YES (IPM motor)	–	Greatly increases the speed control range of an IPM motor.

1.3 Model Number and Nameplate Check

Please perform the following tasks after receiving the drive:

- Inspect the drive for damage.
  If the drive appears damaged upon receipt, contact the shipper immediately.
- Verify receipt of the correct model by checking the information on the nameplate.
- If you have received the wrong model or the drive does not function properly, contact Yaskawa or a Yaskawa representative.

◆ Nameplate

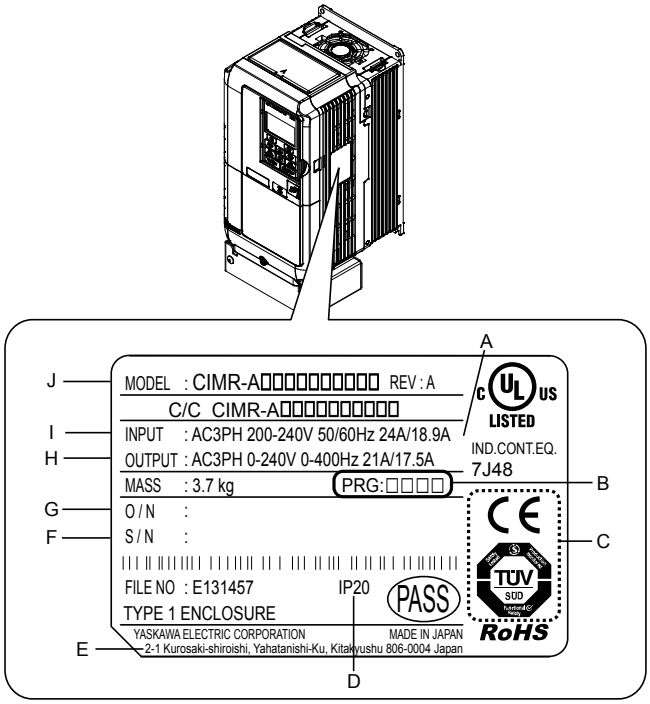

A – Normal Duty Amps / Heavy Duty Amps
B – Software version
C – CE and TÜV Certification <1>
D – Enclosure type
E – Address <2>
F – Serial number
G – Lot number
H – Output specifications
I – Input specifications
J – AC drive model

Figure 1.1 Nameplate Information Example

<1> Certification is model-dependent. *Refer to UL and CSA Standards on page 748* for details.

<2> The address of the head office of Yaskawa Electric Corporation (responsible for product liability) is shown on the nameplate.

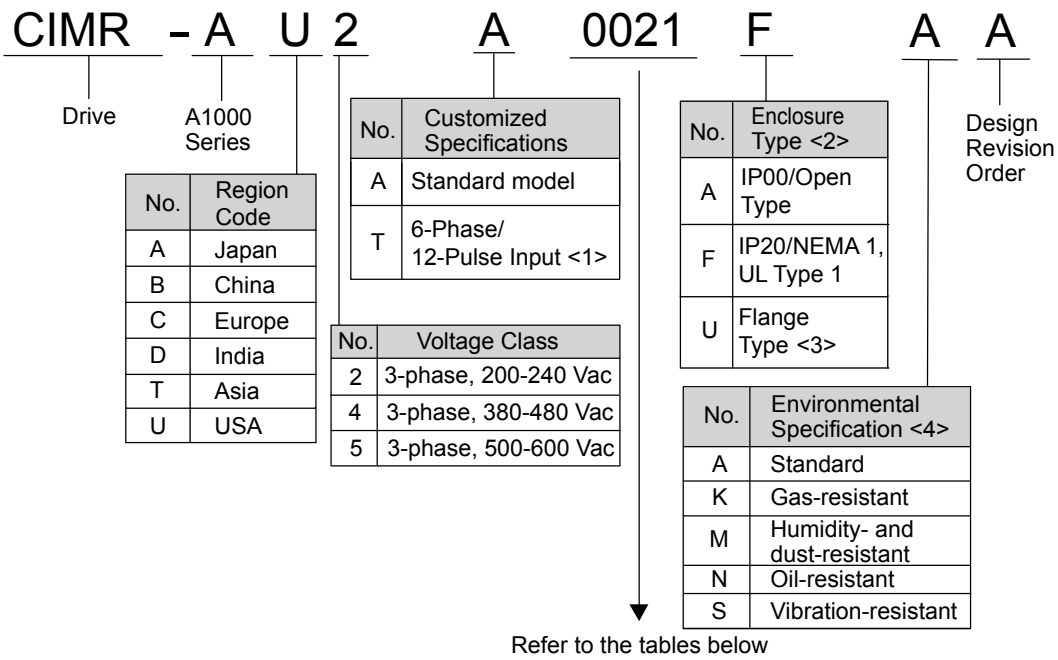

<1> Refer to manual TOEP C710616 50 for information on 12-pulse models.

<2> *Refer to Drive Models and Enclosure Types on page 39* for differences regarding enclosure protection types and component descriptions.

<3> Provides method of mounting drive with backside (heatsink) external to enclosure, with NEMA 12, UL Type 12 integrity.

<4> Drives with these specifications do not guarantee complete protection for the environmental conditions indicated.

■ Three-Phase 200 V

Table 1.3 Model Number and Specifications (200 V)

Normal Duty (ND) C6-01 = 1			Heavy Duty (HD) C6-01 = 0		
Drive Model	**Max. Motor Capacity kW (HP)**	**Rated Output Current A**	**Drive Model**	**Max. Motor Capacity kW (HP)**	**Rated Output Current A**
2A0004	0.75 (0.75)	3.5	2A0004	0.4 (0.75)	3.2
2A0006	1.1 (1)	6.0	2A0006	0.75 (1)	5
2A0008	1.5 (2)	8.0	2A0008	1.1 (2)	6.9
2A0010	2.2 (3)	9.6	2A0010	1.5 (2)	8
2A0012	3.0 (3)	12	2A0012	2.2 (3)	11
2A0018	3.7 (5)	17.5	2A0018	3.0 (3)	14.0
2A0021	5.5 (7.5)	21	2A0021	3.7 (5)	17.5
2A0030	7.5 (10)	30	2A0030	5.5 (7.5)	25
2A0040	11 (15)	40	2A0040	7.5 (10)	33
2A0056	15 (20)	56	2A0056	11 (15)	47
2A0069	18.5 (25)	69	2A0069	15 (20)	60
2A0081	22 (30)	81	2A0081	18.5 (25)	75
2A0110	30 (40)	110	2A0110	22 (30)	85
2A0138	37 (50)	138	2A0138	30 (40)	115
2A0169	45 (60)	169	2A0169	37 (50)	145
2A0211	55 (75)	211	2A0211	45 (60)	180
2A0250	75 (100)	250	2A0250	55 (75)	215
2A0312	90 (125)	312	2A0312	75 (100)	283
2A0360	110 (150)	360	2A0360	90 (125)	346
2A0415	110 (175)	415	2A0415	110 (150)	415

Note: *Refer to Drive Models and Enclosure Types on page 39* for differences regarding enclosure protection types and descriptions of drive components.

Three-Phase 400 V

Table 1.4 Model Number and Specifications (400 V)

Normal Duty (ND) C6-01 = 1			Heavy Duty (HD) C6-01 = 0		
Drive Model	Max. Motor Capacity kW (HP)	Rated Output Current A	Drive Model	Max. Motor Capacity kW (HP)	Rated Output Current A
4A0002	0.75 (0.75)	2.1	4A0002	0.4 (0.75)	1.8
4A0004	1.5 (2)	4.1	4A0004	0.75 (2)	3.4
4A0005	2.2 (3)	5.4	4A0005	1.5 (3)	4.8
4A0007	3.0 (3)	6.9	4A0007	2.2 (3)	5.5
4A0009	3.7 (5)	8.8	4A0009	3.0 (5)	7.2
4A0011	5.5 (7.5)	11.1	4A0011	3.7 (5)	9.2
4A0018	7.5 (10)	17.5	4A0018	5.5 (7.5)	14.8
4A0023	11 (15)	23	4A0023	7.5 (10)	18
4A0031	15 (20)	31	4A0031	11 (15)	24
4A0038	18.5 (25)	38	4A0038	15 (20)	31
4A0044	22 (30)	44	4A0044	18.5 (25-30)	39
4A0058	30 (40)	58	4A0058	22 (25-30)	45
4A0072	37 (50)	72	4A0072	30 (40)	60
4A0088	45 (60)	88	4A0088	37 (50-60)	75
4A0103	55 (75)	103	4A0103	45 (50-60)	91
4A0139	75 (100)	139	4A0139	55 (75)	112
4A0165	90 (125)	165	4A0165	75 (100)	150
4A0208	110 (150)	208	4A0208	90 (125-150)	180
4A0250	132 (200)	250	4A0250	110 (150)	216
4A0296	160 (250)	296	4A0296	132 (200)	260
4A0362	185 (300)	362	4A0362	160 (250)	304
4A0414	220 (350)	414	4A0414	185 (300)	370
4A0515	250 (400-450)	515	4A0515	220 (350)	450
4A0675	355 (500-550)	675	4A0675	315 (400-450-500)	605
4A0930	500 (750)	930	4A0930	450 (650)	810
4A1200	630 (1000)	1200	4A1200	560 (900)	1090

Note: *Refer to Drive Models and Enclosure Types on page 39* for differences regarding enclosure protection types and descriptions of drive components.

Three-Phase 600 V

Table 1.5 Model Number and Specifications (600 V)

Normal Duty (ND) C6-01 = 1			Heavy Duty (HD) C6-01 = 0		
Drive Model	Max. Motor Capacity kW (HP)	Rated Output Current A	Drive Model	Max. Motor Capacity kW (HP)	Rated Output Current A
5A0003	1.5 (2)	2.7	5A0003	0.75 (1)	1.7
5A0004	2.2 (3)	3.9	5A0004	1.5 (2)	3.5
5A0006	3.7 (5)	6.1	5A0006	2.2 (3)	4.1
5A0009	5.5 (7.5)	9	5A0009	3.7 (5)	6.3
5A0011	7.5 (10)	11	5A0011	5.5 (7.5)	9.8
5A0017	11 (15)	17	5A0017	7.5 (10)	12.5
5A0022	15 (20)	22	5A0022	11 (15)	17
5A0027	18.5 (25)	27	5A0027	15 (20)	22
5A0032	22 (30)	32	5A0032	18.5 (25)	27
5A0041	30 (40)	41	5A0041	22 (25-30)	32
5A0052	37 (50)	52	5A0052	30 (40)	41

Normal Duty (ND) C6-01 = 1			Heavy Duty (HD) C6-01 = 0		
Drive Model	Max. Motor Capacity kW (HP)	Rated Output Current A	Drive Model	Max. Motor Capacity kW (HP)	Rated Output Current A
5A0062	45 (60)	62	5A0062	37 (50-60)	52
5A0077	55 (75)	77	5A0077	45 (50-60)	62
5A0099	75 (100)	99	5A0099	55 (75)	77
5A0125	90 (125)	125	5A0125	75 (100)	99
5A0145	110 (150)	145	5A0145	90 (125)	130
5A0192	160 (200)	192	5A0192	110 (150)	172
5A0242	185 (250)	242	5A0242	160 (200)	200

Note: *Refer to Drive Models and Enclosure Types on page 39* for differences regarding enclosure protection types and descriptions of drive components.

1.4 Drive Models and Enclosure Types

Two types of enclosures are offered for A1000 drives:

- IP20/NEMA 1, UL Type 1 enclosure models mount to an indoor wall or in an enclosure panel.
- IP00/Open Type enclosure models are designed for installation in an enclosure panel that serves to protect personnel from injury caused by accidentally touching live parts.

Table 1.6 describes drive enclosures and models.

Table 1.6 Drive Models and Enclosure Types

Voltage Class	Enclosure Type	
	IP20/NEMA 1, UL Type 1 Enclosure <1> Drive Model	IP00/Open Type Enclosure Drive Model
Three-Phase 200 V Class	2A0004F	<1>
	2A0006F	<1>
	2A0008F	<1>
	2A0010F	<1>
	2A0012F	<1>
	2A0018F	<1>
	2A0021F	<1>
	2A0030F	<1>
	2A0040F	<1>
	2A0056F	<1>
	2A0069F	<1>
	2A0081F	<1>
	2A0110F	<1>
	2A0138F	<1>
	2A0169F	<1>
	2A0211F	<1>
	<2>	2A0250A
	<2>	2A0312A
	<2>	2A0360A
	<3>	2A0415A
Three-Phase 400 V Class	4A0002F	<1>
	4A0004F	<1>
	4A0005F	<1>
	4A0007F	<1>
	4A0009F	<1>
	4A0011F	<1>
	4A0018F	<1>
	4A0023F	<1>
	4A0031F	<1>
	4A0038F	<1>
	4A0044F	<1>
	4A0058F	<1>
	4A0072F	<1>

Voltage Class	Enclosure Type	
	IP20/NEMA 1, UL Type 1 Enclosure <1> Drive Model	IP00/Open Type Enclosure Drive Model
Three-Phase 400 V Class	4A0088F	<1>
	4A0103F	<1>
	4A0139F	<1>
	4A0165F	<1>
	<2>	4A0208A
	<2>	4A0250A
	<2>	4A0296A
	<2>	4A0362A
	<3>	4A0414A
	<3>	4A0515A
	<3>	4A0675A
	<3>	4A0930A
	<3>	4A1200A
Three-Phase 600 V Class	5A0003F	<1>
	5A0004F	<1>
	5A0006F	<1>
	5A0009F	<1>
	5A0011F	<1>
	5A0017F	<1>
	5A0022F	<1>
	5A0027F	<1>
	5A0032F	<1>
	5A0041F	<1>
	5A0052F	<1>
	5A0062F	<1>
	5A0077F	<1>
	5A0099F	<1>
	<2>	5A0125A
	<2>	5A0145A
	<2>	5A0192A
	<2>	5A0242A

<1> Removing the top protective cover from an IP20/NEMA 1, UL Type 1 enclosure drive voids NEMA 1, UL Type 1 protection while retaining IP20 conformity.

<2> Customers may convert these models to IP20/NEMA 1, UL Type 1 enclosures using an IP20/NEMA 1, UL Type 1 Kit. ***Refer to IP20/NEMA 1, UL Type 1 Kit Selection on page 70*** to select the appropriate kit.

<3> Contact a Yaskawa representative for IP20/NEMA 1, UL Type 1 Kit availability for these models.

1.5 Component Names

This section gives an overview of the drive components and filter module components described in this manual.

Note: 1. *Refer to Using the Digital Operator on page 155* for a description of the operator keypad.
2. The drive may have no cooling fans or up to two cooling fans depending on the model.

◆ IP20/UL Type 1 Enclosure

■ Three-Phase AC 200 V Models 2A0004F to 2A0081F Three-Phase AC 400 V Models 4A0002F to 4A0044F Three-Phase AC 600 V Models 5A0003F to 5A0032F

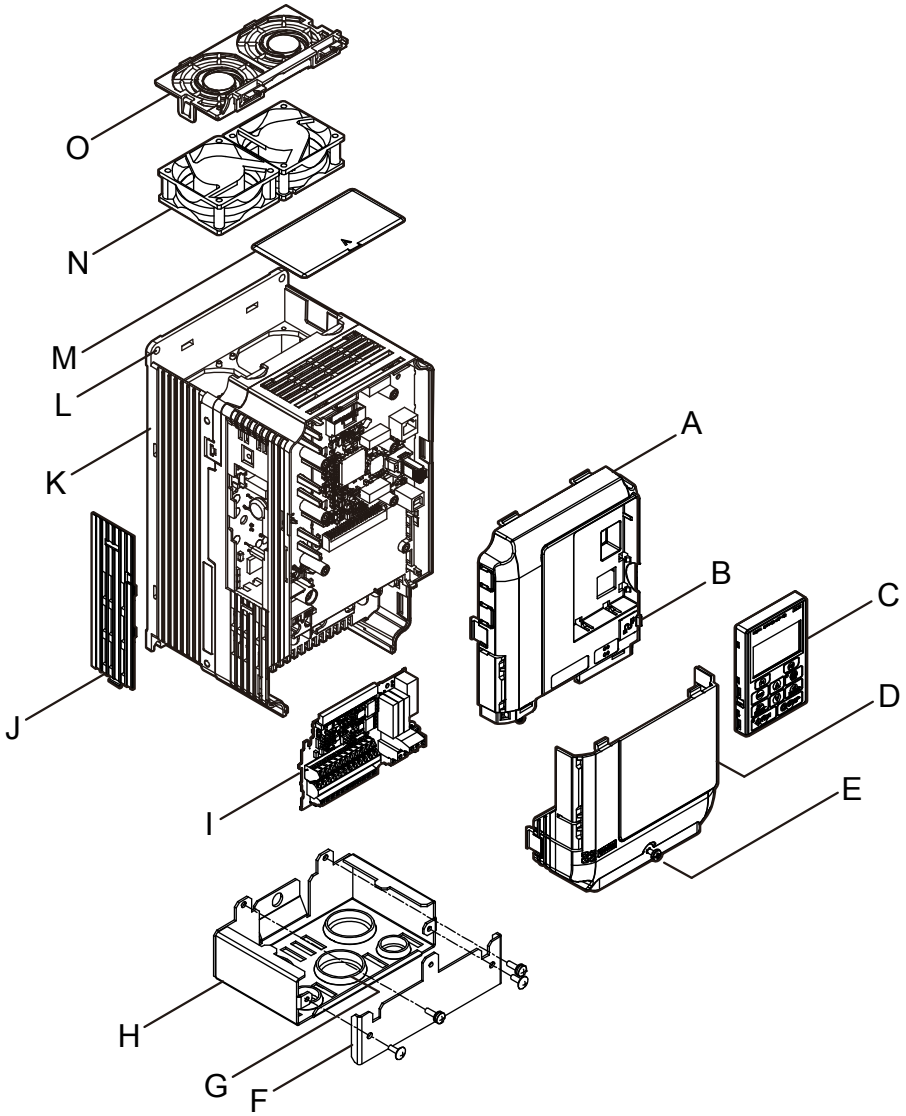

A – Front cover
B – USB port (type-B)
C – Digital operator
D – Terminal cover
E – Terminal cover screw
F – Conduit bracket front cover
G – Rubber bushing
H – Conduit bracket
I – Terminal board
J – Optional 24 V DC power supply connector cover
K – Heatsink
L – Mounting hole
M – Top protective cover
N – Cooling fan <1>
O – Fan finger guard <1>

Figure 1.2 Exploded View of IP20/NEMA 1, UL Type 1 Components (Model 2A0030F)

<1> Drive models 2A0018, 2A0021, 4A0007 to 4A0011, 5A0006F, and 5A0009F have a single cooling fan. Drive models 2A0004 to 2A0012, 4A0002 to 4A0005, 5A0003F, and 5A0004F do not have a cooling fan or a fan finger guard.

■ Three-Phase AC 200 V Models 2A0110F, 2A0138F Three-Phase AC 400 V Models 4A0058F to 4A0103F Three-Phase AC 600 V Models 5A0041F, 5A0052F

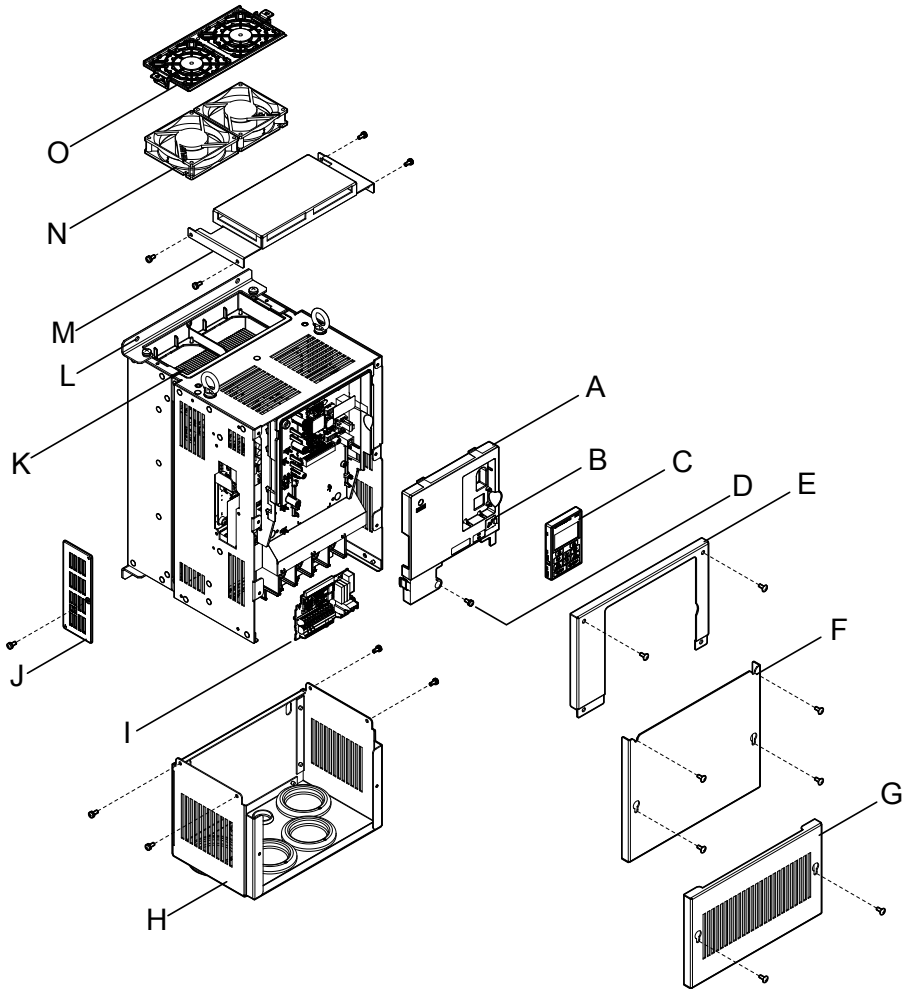

A – Front cover
B – USB port (type-B)
C – Digital operator
D – Front cover screw
E – Drive cover
F – Terminal cover
G – Conduit bracket front cover
H – Conduit bracket
I – Terminal board
J – Optional 24 V DC power supply connector cover
K – Heatsink
L – Mounting hole
M – Top protective cover
N – Cooling fan
O – Fan finger guard

Figure 1.3 Exploded View of IP20/NEMA 1, UL Type 1 Enclosure Components (Model 2A0110F)

■ Three-Phase AC 200 V Models 2A0169F, 2A0211F Three-Phase AC 400 V Models 4A0139F to 4A0165F Three-Phase AC 600 V Models 5A0062F to 5A0099F

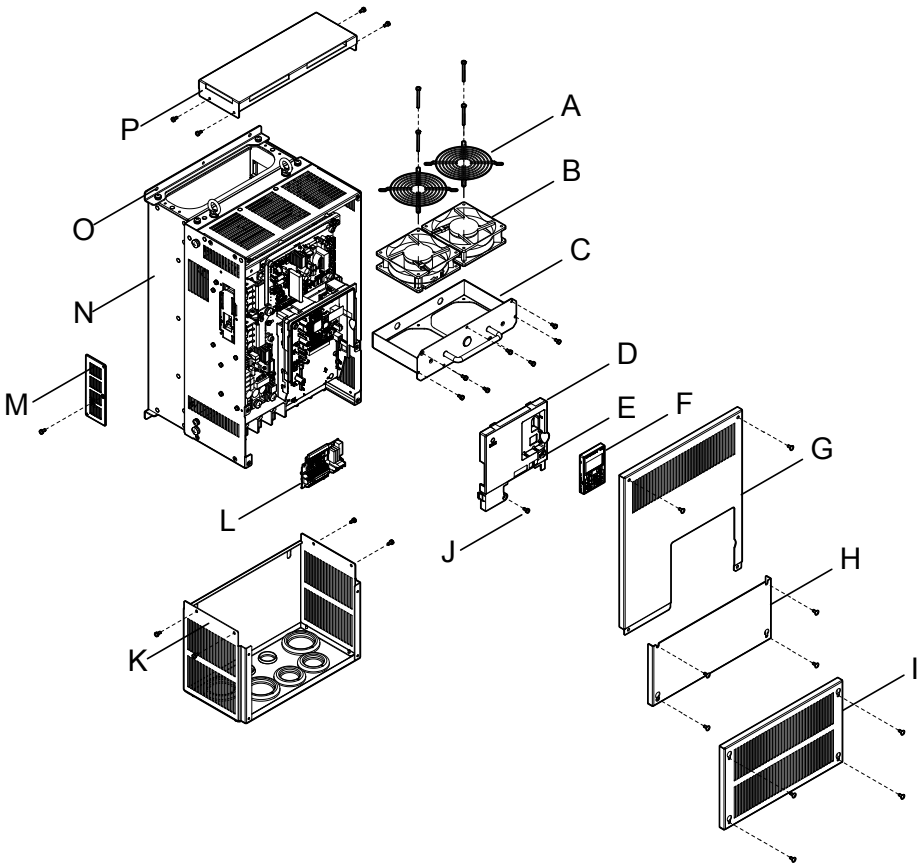

A – Fan guard
B – Cooling fan
C – Fan bracket
D – Front cover
E – USB port (type-B)
F – Digital operator
G – Drive cover
H – Terminal cover
I – Conduit bracket front cover
J – Front cover
K – Conduit bracket
L – Terminal board
M – Optional 24 V DC power supply connector cover
N – Heatsink
O – Mounting hole
P – Top protective cover

Figure 1.4 Exploded View of IP20/NEMA 1, UL Type 1 Enclosure Components (Model 4A0165F)

◆ IP00/Open Type Enclosure

■ Three-Phase AC 200 V Models 2A0250A, 2A0312A
Three-Phase AC 400 V Model 4A0208A
Three-Phase AC 600 V Models 5A0125A, 5A0145A

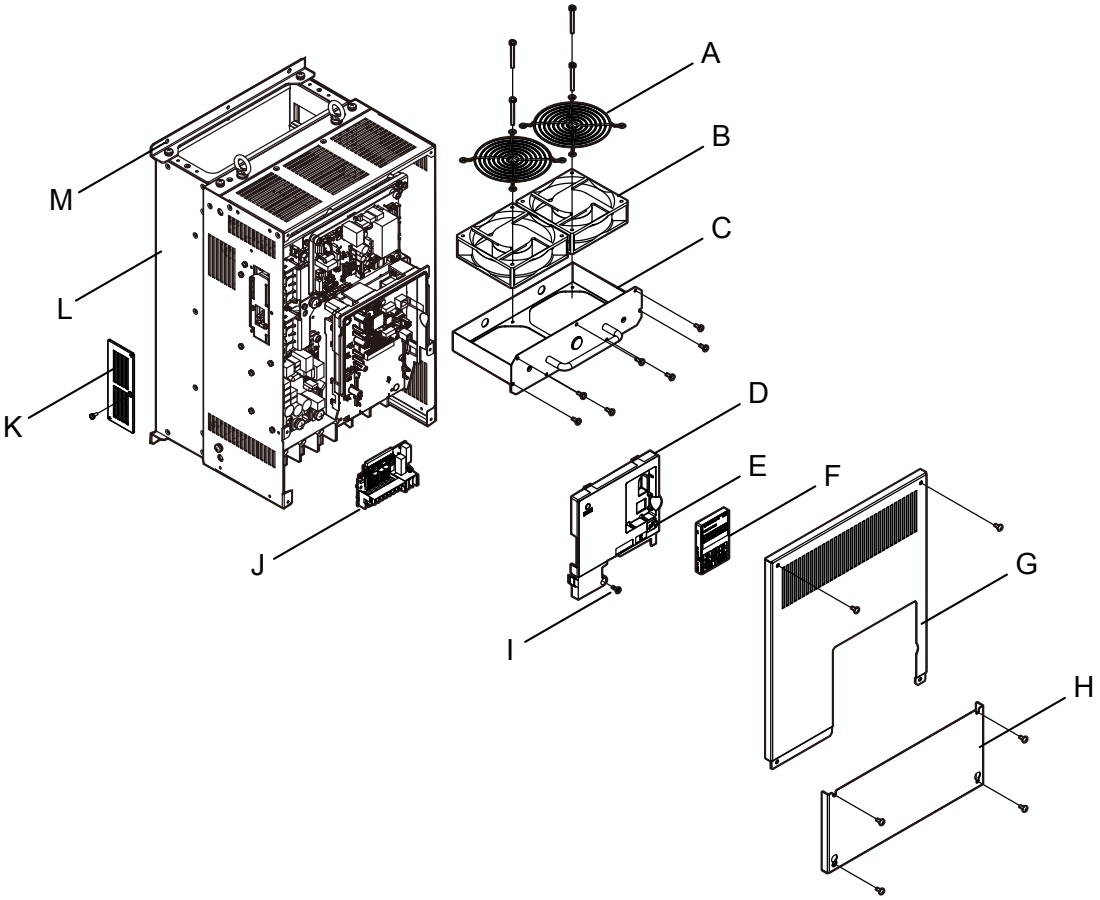

A – Fan guard
B – Cooling fan
C – Fan bracket
D – Front cover
E – USB port (type-B)
F – Digital operator
G – Drive cover
H – Terminal cover
I – Front cover screw
J – Terminal board
K – Optional 24 V DC power supply connector cover
L – Heatsink
M – Mounting hole

Figure 1.5 Exploded view of IP00/Open Type Enclosure Components (Model 4A0208A)

■ Three-Phase AC 200 V Models 2A0360A, 2A0415A Three-Phase AC 400 V Models 4A0250A to 4A0362A Three-Phase AC 600 V Models 5A0192A, 5A0242A

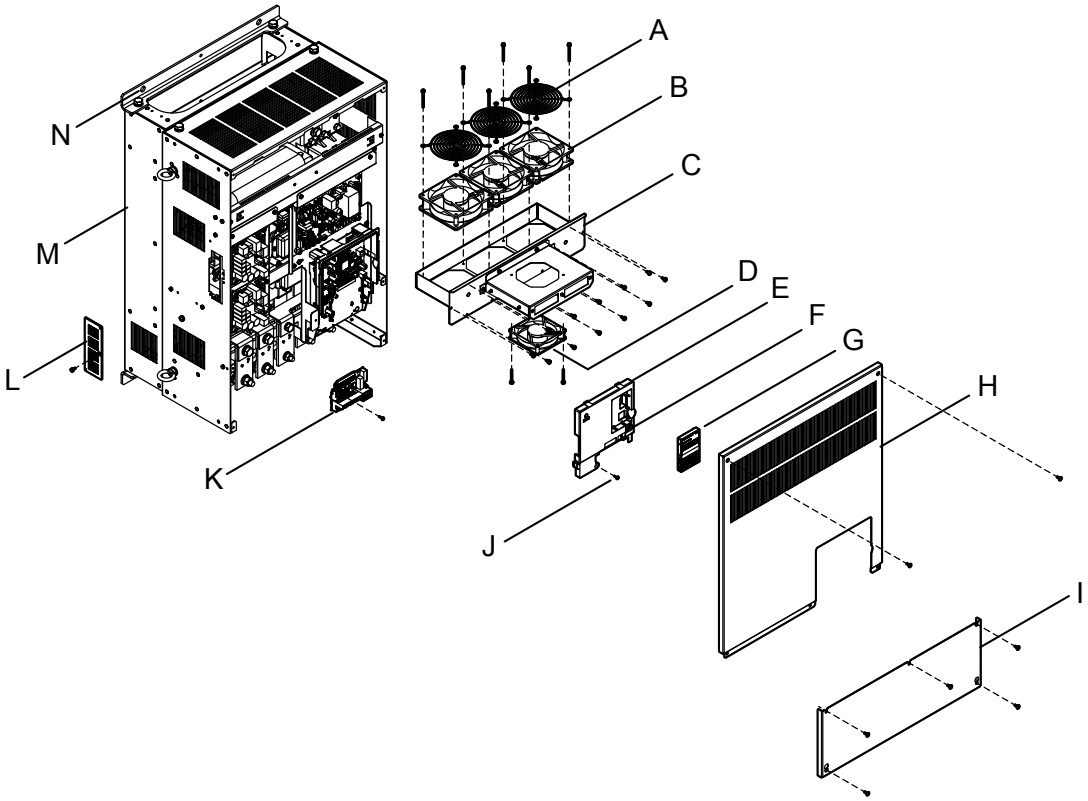

A – Fan guard
B – Cooling fan
C – Fan bracket
D – Circulation fan <1>
E – Front cover
F – USB port (type-B)
G – Digital operator
H – Drive cover
I – Terminal cover
J – Front cover screw
K – Terminal board
L – Optional 24 V DC power supply connector cover
M – Heatsink
N – Mounting hole

Figure 1.6 Exploded view of IP00/Open Type Enclosure Components (Model 4A0362A)

<1> Drive models 2A0360, 2A0415, and 4A0362 have a built-in circulation fan.

■ Three-Phase AC 400 V Model 4A0414A

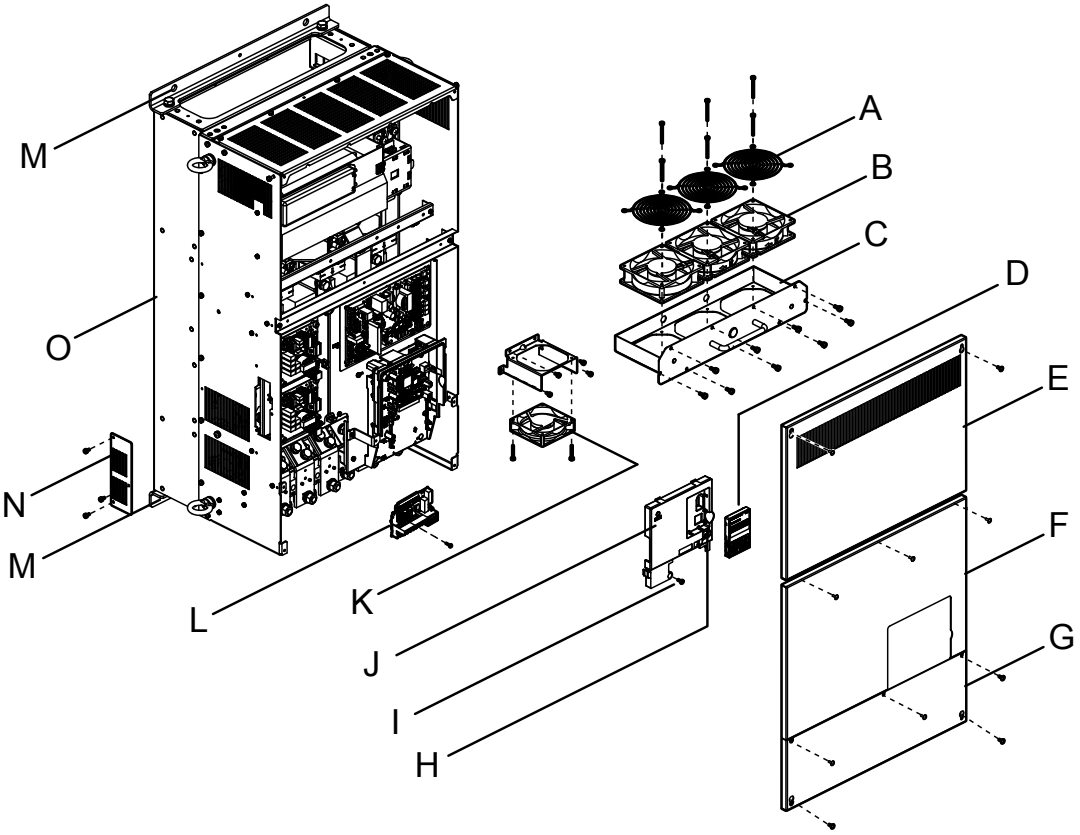

A – Fan guard
B – Cooling fan
C – Fan bracket
D – Digital operator
E – Drive cover 1
F – Drive cover 2
G – Terminal cover
H – USB port (type-B)
I – Front cover screw
J – Front cover
K – Circulation fan
L – Terminal board
M – Mounting hole
N – Optional 24 V DC power supply connector cover
O – Heatsink

Figure 1.7 Exploded view of IP00/Open Type Enclosure Components (Model 4A0414A)

■ Three-Phase AC 400 V Models 4A0515A, 4A0675A

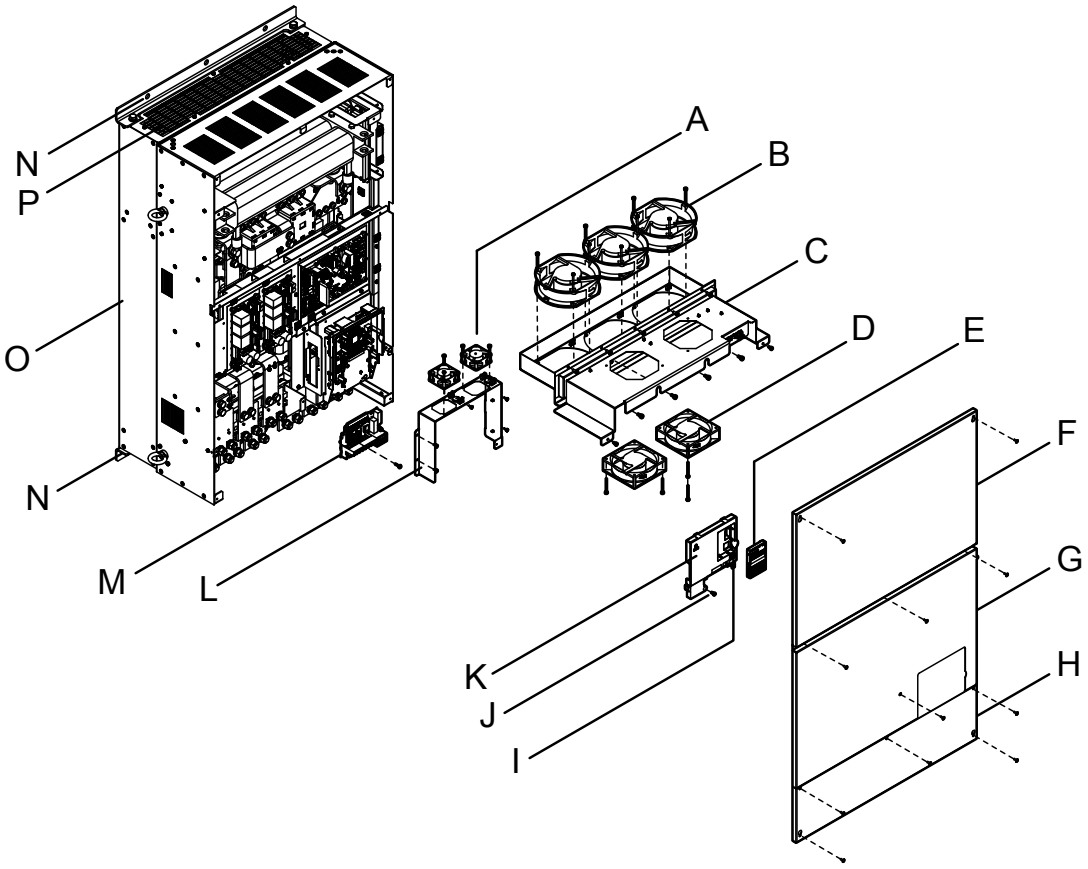

A – Circuit board cooling fan
B – Cooling fan
C – Fan bracket
D – Circulation Fan
E – Digital operator
F – Drive cover 1
G – Drive cover 2
H – Terminal cover
I – USB port (type-B)
J – Front cover screw
K – Front cover
L – Circuit board cooling fan unit case
M – Terminal board
N – Mounting hole
O – Heatsink
P – Fan guard

Figure 1.8 Exploded view of IP00/Open Type Enclosure Components (Model 4A0675A)

■ Three-Phase AC 400 V Models 4A0930A, 4A1200A

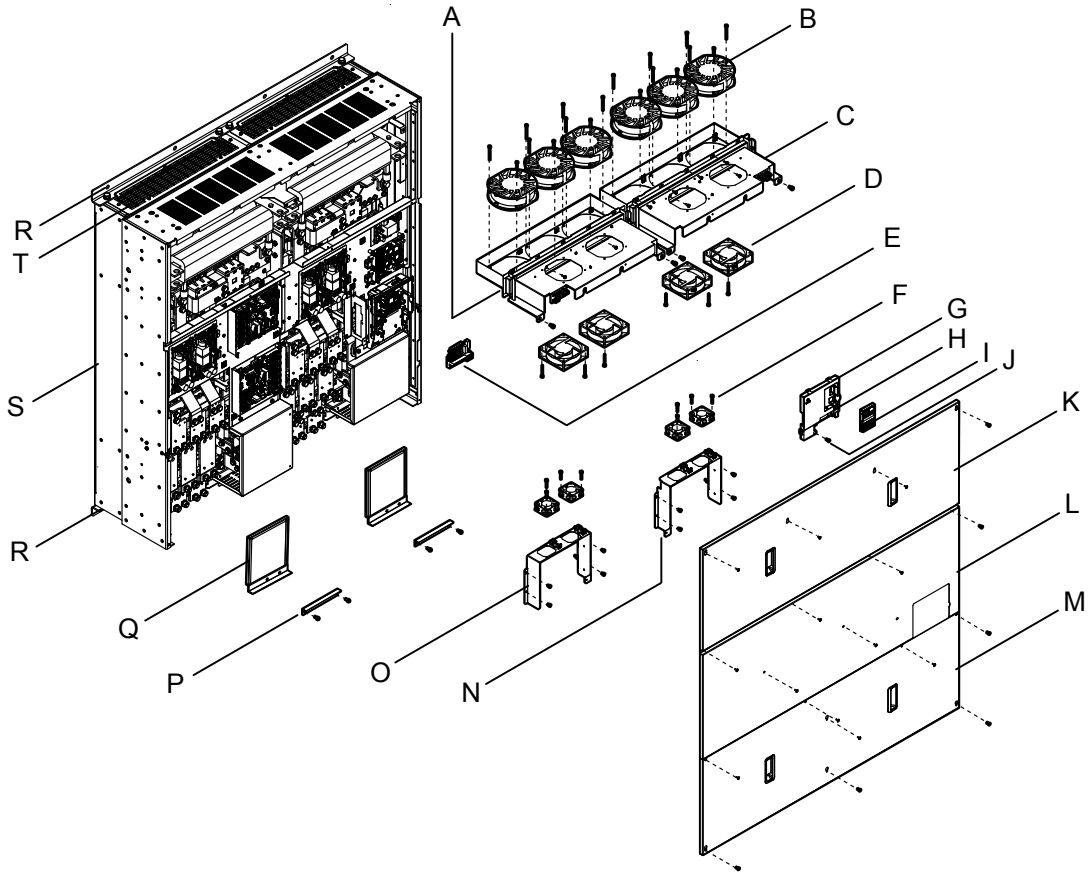

A – Fan unit case (L)
B – Cooling fan
C – Fan unit case (R)
D – Circulation Fan
E – Terminal board
F – Circuit board cooling fan
G – Front cover
H – USB port (type-B)
I – Digital operator
J – Front cover screw
K – Drive cover 1
L – Drive cover 2
M – Terminal cover
N – Circuit board cooling fan unit case (R)
O – Circuit board cooling fan unit case (L)
P – Blind cover
Q – Filter case
R – Mounting hole
S – Heatsink
T – Fan guard

Figure 1.9 Exploded view of IP00/Open Type Enclosure Components (Model 4A0930A)

◆ Front Views

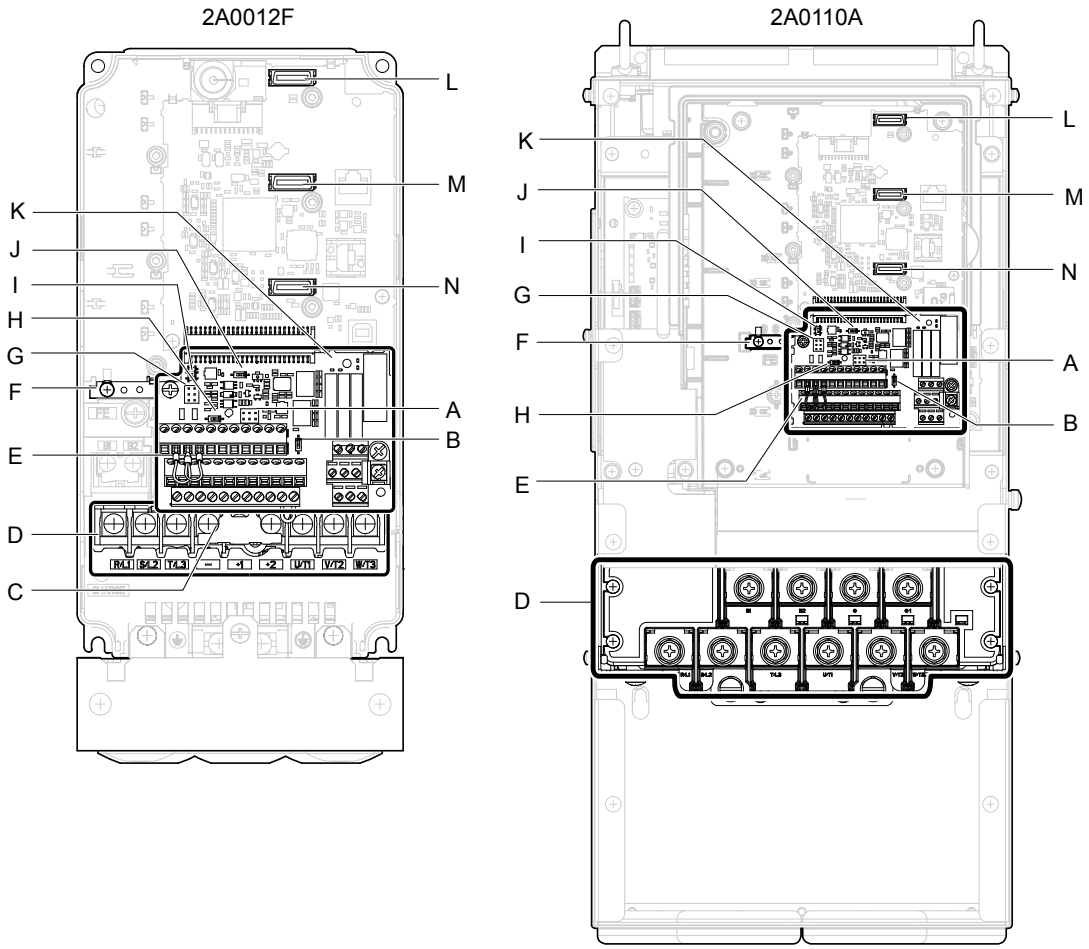

A – Jumper S5 (*Refer to Terminal AM/ FM Signal Selection on page 148*)
B – DIP switch S4 (*Refer to Terminal A3 Analog/PTC Input Selection on page 147*)
C – Protective cover to prevent miswiring
D – Main circuit terminal (*Refer to Wiring the Main Circuit Terminal on page 138*)
E – Terminal board connector
F – Ground terminal
G – Sink/source jumper S3 (*Refer to Sinking/Sourcing Mode for Digital Inputs on page 145*)
H – DIP switch S2 (*Refer to MEMOBUS/ Modbus Termination on page 148*)
I – Slide switch S6 (*Refer to Terminal DM+ and DM- Output Signal Selection on page 148*)
J – DIP switch S1 (*Refer to Terminal A2 Input Signal Selection on page 147*)
K – Terminal board (*Refer to Control Circuit Wiring on page 139*)
L – Option card connector (CN5-C)
M – Option card connector (CN5-B)
N – Option card connector (CN5-A)

Figure 1.10 Front View of Drives

This Page Intentionally Blank

2

Mechanical Installation

This chapter explains how to properly mount and install the drive.

2.1 SECTION SAFETY.....52
2.2 MECHANICAL INSTALLATION.....54
2.3 FLANGE TYPE ENCLOSURE (NEMA 12 BACKSIDE) DIMENSIONS & HEAT LOSS.....71

2.1 Section Safety

⚠ WARNING

Fire Hazard

Provide sufficient cooling when installing the drive inside an enclosed panel or cabinet.

Failure to comply could result in overheating and fire.

When multiple drives are placed inside the same enclosure panel, install proper cooling to ensure air entering the enclosure does not exceed 40 °C.

Crush Hazard

Only allow qualified personnel to operate a crane or hoist to transport the drive.

Failure to comply may result in serious injury or death from falling equipment.

Use a dedicated lifter when transporting the drive by a lifter.

Failure to comply may result in serious injury or death from falling equipment.

Only use vertical suspension to temporarily lift the drive during installation to an enclosure panel. Do not use vertical suspension to transport the drive.

Failure to comply may result in serious injury or death from falling equipment.

Use screws to securely affix the drive front cover, terminal blocks, and other drive components prior to vertical suspension.

Failure to comply may result in serious injury or death from falling equipment.

Do not subject the drive to vibration or impact greater than 1.96 m/s^2 (0.2 G) while it is suspended by the cables.

Failure to comply may result in serious injury or death from falling equipment.

Do not attempt to flip the drive over or leave the drive unattended while it is suspended by the wires.

Failure to comply may result in serious injury or death from falling equipment.

⚠ CAUTION

Crush Hazard

Do not carry the drive by the front cover or the terminal cover.

Failure to comply may result in minor or moderate injury from the main body of the drive falling.

NOTICE

Equipment Hazard

Prevent foreign matter such as metal shavings or wire clippings from falling into the drive during drive installation and project construction.

Failure to comply could result in damage to the drive. Place a temporary cover over the top during installation. Be sure to remove the temporary cover before start-up, as the cover will reduce ventilation and cause the unit to overheat.

Observe proper electrostatic discharge (ESD) procedures when handling the drive.

Failure to comply could result in ESD damage to the drive circuitry.

Operating the motor in the low-speed range diminishes the cooling effects, increases motor temperature, and may lead to motor damage by overheating.

Reduce the motor torque in the low-speed range whenever using a standard blower cooled motor. If 100% torque is required continuously at low speed, consider using a special drive or vector-control motor. Select a motor that is compatible with the required load torque and operating speed range.

The speed range for continuous operation differs according to the lubrication method and motor manufacturer.

If the motor is to be operated at a speed higher than the rated speed, consult with the manufacturer.

Continuously operating an oil-lubricated motor in the low-speed range may result in burning.

When the input voltage is 440 V or higher or the wiring distance is greater than 100 meters, pay special attention to the motor insulation voltage or use a drive-rated motor with reinforced insulation.

Failure to comply could lead to motor winding failure.

Motor vibration may increase when operating a machine in variable-speed mode, if that machine previously operated at a constant speed.

Install vibration-proof rubber on the motor base or use the frequency jump function to skip a frequency resonating the machine.

The motor may require more acceleration torque with drive operation than with a commercial power supply.

Set a proper V/f pattern by checking the load torque characteristics of the machine to be used with the motor.

The rated input current of submersible motors is higher than the rated input current of standard motors.

Select an appropriate drive according to its rated output current. When the distance between the motor and drive is long, use a cable thick enough to connect the motor to the drive to prevent motor torque reduction.

The current rating differs for a motor with variable pole pitches differs from a standard motor.

Check the maximum current of the motor before selecting the drive capacity. Only switch motor poles when the motor is stopped. Switching between motor during run will trigger overcurrent protection circuitry or result in overvoltage from regeneration, and the motor will simply coast to stop.

When using an explosion-proof motor, it must be subject to an explosion-proof test in conjunction with the drive.

This is also applicable when an existing explosion-proof motor is to be operated with the drive. Since the drive itself is not explosion-proof, always install it in a safe place.

Never lift the drive up while the cover is removed.

This can damage the terminal board and other components.

2.2 Mechanical Installation

This section outlines specifications, procedures, and the environment for proper mechanical installation of the drive.

◆ Installation Environment

Install the drive in an environment matching the specifications in *Table 2.1* to help prolong the optimum performance life of the drive.

Table 2.1 Installation Environment

Environment	Conditions
Installation Area	Indoors
Ambient Temperature	IP20/NEMA 1, UL Type 1 enclosure: -10 °C to +40 °C (14 °F to 104 °F) IP00/Open Type enclosure: -10 °C to +50 °C (14 °F to 122 °F) Finless Type: IP20/IP00 enclosure: -10 °C to +45 °C (14 °F to 113 °F) Drive reliability improves in environments without wide temperature fluctuations. When using the drive in an enclosure panel, install a cooling fan or air conditioner in the area to ensure that the air temperature inside the enclosure does not exceed the specified levels. Do not allow ice to develop on the drive.
Humidity	95% RH or less and free of condensation
Storage Temperature	-20 °C to +60 °C (-4 °F to +140 °F)
Surrounding Area	Install the drive in an area free from: • oil mist and dust • metal shavings, oil, water, or other foreign materials • radioactive materials • combustible materials (e.g., wood) • harmful gases and liquids • excessive vibration • chlorides • direct sunlight.
Altitude	1000 m (3281 ft.) or lower, up to 3000 m (9843 ft.) with derating. *Refer to Drive Derating Data on page 542* for details.
Vibration	10 to 20 Hz at 9.8 m/s^2 (32.15 ft/s^2) <1> 20 to 55 Hz at 5.9 m/s^2 (19.36 ft/s^2) (Models 2A0004 to 2A0211, 4A0002 to 4A0165, and 5A0003 to 5A0099) or 2.0 m/s^2 (6.56 ft/s^2) (Models 2A0250 to 2A0415, 4A0208 to 4A1200, and 5A0125 to 5A0242)
Orientation	Install the drive vertically to maintain maximum cooling effects.

<1> Models 4A0930 and 4A1200 are rated at 5.9 m/s^2 (19.36 ft/s^2)

NOTICE: *Avoid placing drive peripheral devices, transformers, or other electronics near the drive as the noise created can lead to erroneous operation. If such devices must be used in close proximity to the drive, take proper steps to shield the drive from noise.*

NOTICE: *Prevent foreign matter such as metal shavings and wire clippings from falling into the drive during installation. Failure to comply could result in damage to the drive. Place a temporary cover over the top of the drive during installation. Remove the temporary cover before drive start-up, as the cover will reduce ventilation and cause the drive to overheat.*

◆ Installation Orientation and Spacing

NOTICE: *Install the drive upright as illustrated in Figure 2.1. Failure to comply may damage the drive due to improper cooling.*

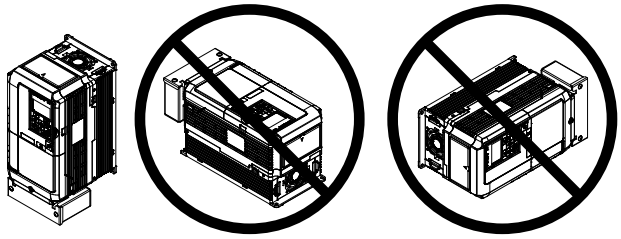

Figure 2.1 Correct Installation Orientation

NOTICE: *Install the drive upright as specified in the manual. Failure to comply may damage the drive due to improper cooling.*

■ Single Drive Installation

Figure 2.2 shows the installation distance required to maintain sufficient space for airflow and wiring. Install the heatsink against a closed surface to avoid diverting cooling air around the heatsink.

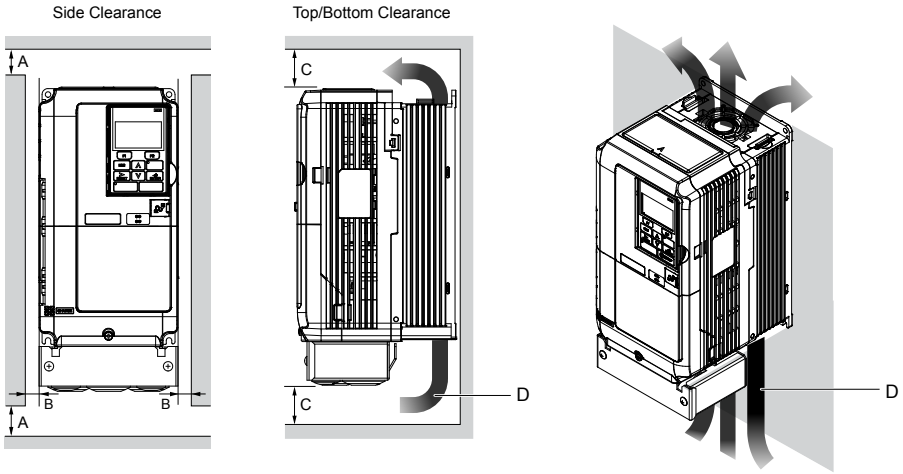

A – 50 mm minimum
B – 30 mm minimum
C – 120 mm minimum
D – Airflow direction

Figure 2.2 Correct Installation Spacing

Note: IP20/UL Type 1 enclosure and IP00/Open Type enclosure models require the same amount of space above and below the drive for installation.

■ Multiple Drive Installation (Side-by-Side Installation)

Models 2A0004 to 2A0081, 4A0002 to 4A0044, and 5A0003 to 5A0032 can take advantage of Side-by-Side installation.

When installing multiple drives into the same enclosure panel, mount the drives according to *Figure 2.2* and set L8-35, Installation Method Selection, to 1 (Side-by-Side Mounting).

When mounting drives with the minimum clearance of 2 mm according to *Figure 2.3*, set parameter L8-35 to 1 while considering derating.

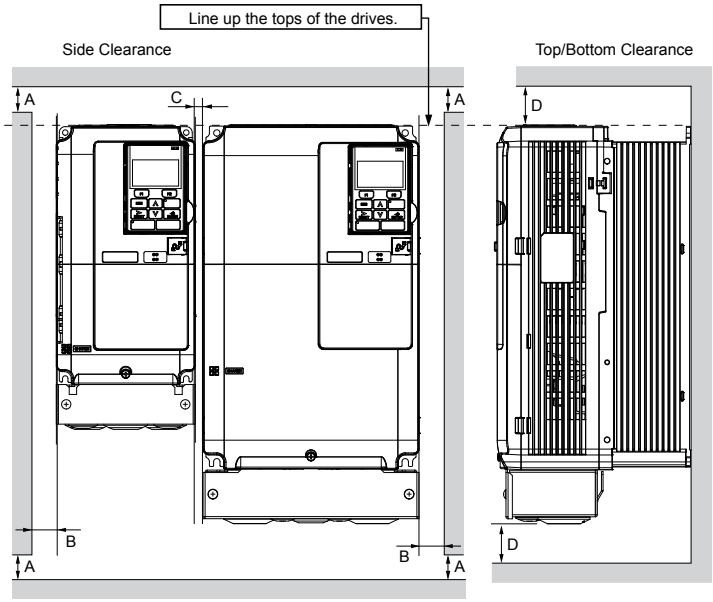

A – 50 mm minimum
B – 30 mm minimum
C – 2 mm minimum
D – 120 mm minimum

Figure 2.3 Space Between Drives (Side-by-Side Mounting)

Note: Align the tops of the drives when installing drives of different heights in the same enclosure panel. Leave space between the tops and bottoms of stacked drives for easier cooling fan replacement.

Remove the top protective covers of all drives as shown in ***Figure 2.4*** when mounting IP20/NEMA 1, UL Type 1 enclosure drives side-by-side. ***Refer to Top Protective Cover on page 126*** to remove and reattach the top protective cover.

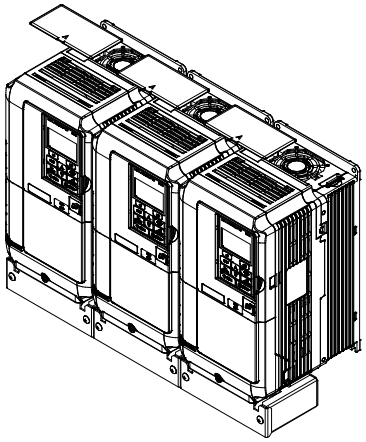

Figure 2.4 IP20/NEMA 1, UL Type 1 Side-by-Side Mounting in Enclosure

◆ Instructions on Installation Using the Eye Bolts

Eye bolts are used to install the drive or to temporarily lift the drive when replacing it. Using the eye bolts, the drive can be installed in an enclosure panel or on a wall. Do not leave the drive suspended by the wires in a horizontal or vertical position for long periods of time. Do not transport the drive over long distances. Read the following precautions and instructions before installing the drive.

WARNING! *Crush Hazard. Observe the following instructions and precautions. Failure to comply could result in serious injury or death from falling equipment.*
Only use vertical suspension to temporarily lift the drive during installation to an enclosure panel. Do not use vertical suspension to transport the drive.
Use screws to securely affix the drive front cover, terminal blocks, and other drive components prior to vertical suspension.
Do not subject the drive to vibration or impact greater than 1.96 m/s^2 (0.2 G) while it is suspended by the wires.
Do not leave the drive unattended while it is suspended by the wires.
Do not attempt to flip the drive over while it is suspended by the wires.

■ Horizontal Suspension of Drive Models 2A0360, 2A0415, and 4A0250 to 4A0675

To make a wire hanger or frame for use when lifting the drive with a crane, lay the drive in a horizontal position and pass a wire through the holes of the four eye bolts.

NOTICE: *Damage to Equipment. When lifting the drive, confirm that the spring washer is fully closed. Failure to comply may deform or damage the drive when lifted.*

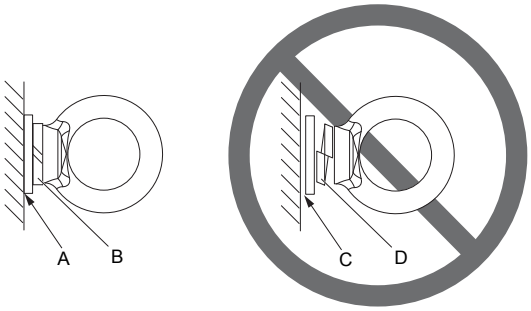

A – No space between drive and washer
B – Spring washer fully closed
C – Space between drive and washer
D – Spring washer open

Figure 2.5 Spring Washer

■ Vertical Suspension of Drive Models 2A0360, 2A0415, and 4A0250 to 4A1200

Models 2A0360, 2A0415, and 4A0250 to 4A0675

When vertical suspension of the drive is required in an enclosure panel, change the orientation of the eye bolts for these models by turning the eye bolts counterclockwise 90 degrees.

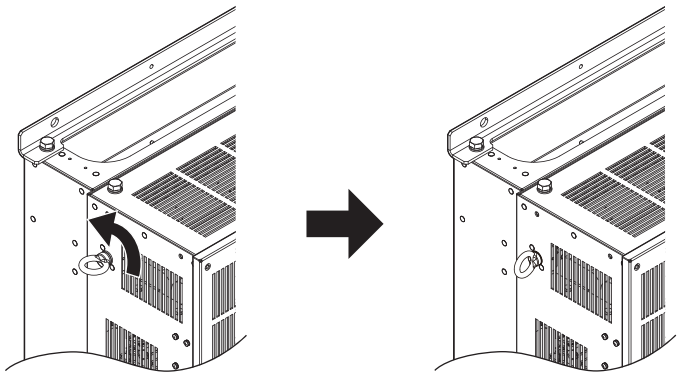

Figure 2.6 Adjusting Angle of Eye Bolts

Models 4A0930 and 4A1200

When suspending models 4A0930 or 4A1200 with wires, follow the procedure described below.

WARNING! *Crush Hazard. Use an adequate length of wire to ensure a 50° or wider suspension angle as illustrated in* ***Figure 2.8****. The maximum allowable load of the eye bolts cannot be guaranteed when the drive is suspended with the wires at angles less than 50°. Failure to comply may result in serious injury or death from falling equipment.*

1. Remove the four eye bolts from the drive side panels and fix them securely on the top panel.

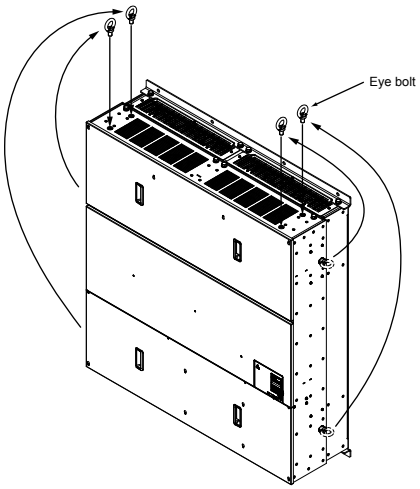

Figure 2.7 Eye Bolt Repositioning

2. Pass wire through the holes of all four eye bolts.

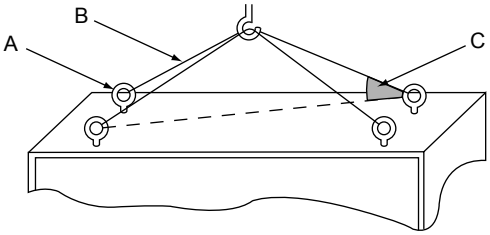

A – Eye bolt
B – Wires
C – Suspending angle: 50° or greater

Figure 2.8 Suspension Wire Angle Example

3. Gradually take up the slack in the wires and hoist the drive after the wires are stretched tight.
4. Lower the drive when ready to install in the enclosure panel. Stop lowering the drive when it is near the floor then begin lowering the drive again very slowly until the drive is placed correctly.

◆ Digital Operator Remote Usage

■ Remote Operation

The digital operator mounted on the drive can be removed and connected to the drive using a remote control extension cable up to 3 m long to facilitate operation when the drive is installed in a location where it cannot be easily accessed.

The digital operator can also be permanently mounted remote locations such as panel doors using a remote control extension cable and an installation support set (depending on the installation type).

Note: *Refer to Drive Options and Peripheral Devices on page 500* for information on remote control extension cables and installation support sets.

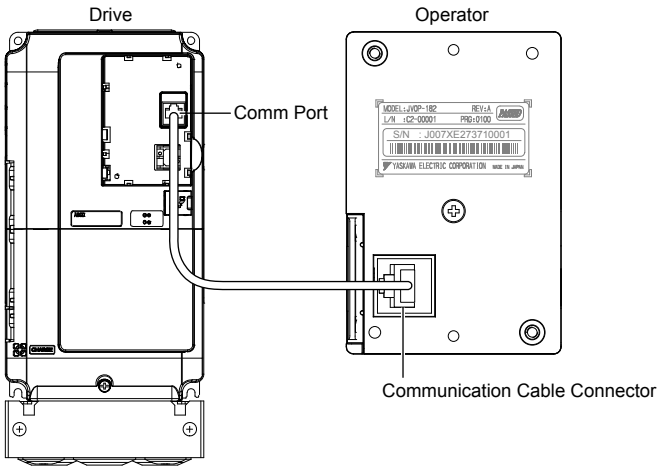

Figure 2.9 Communication Cable Connection

■ Digital Operator Remote Installation

Digital Operator Dimensions

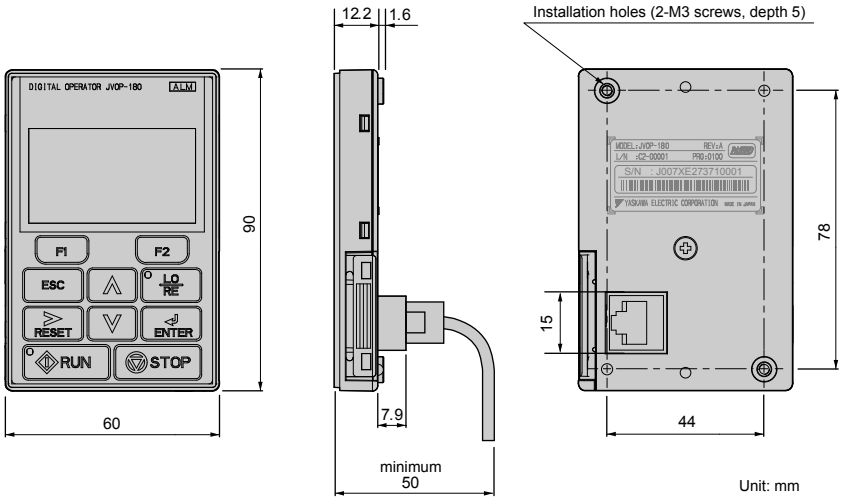

Figure 2.10 Digital Operator Dimensions

NEMA Keypad Kits

Provides digital operator functionality on an enclosure designed for IP20/NEMA 1, UL Type 1; NEMA 3R, UL Type 3R; NEMA 4, UL Type 4; NEMA 4X, UL Type 4X; NEMA 12, UL Type 12; or IPX6 environment.

Table 2.2 Installation Environment

Keypad Kit Model	Description
UUX000526	Blank label on the front.
UUX000527	Yaskawa brand label on the front.

Installation Types and Required Materials

The digital operator mounts to an enclosure two different ways:

- **External/face-mount** installs the operator outside the enclosure panel
- **Internal/flush-mount** installs the operator inside the enclosure panel

Table 2.3 Digital Operator Installation Methods and Required Tools

Installation Method	Description	Installation Support Sets	Model	Required Tools
External/ Face-Mount	Simplified installation with the digital operator is mounted on the outside of the panel with two screws.	–	–	Phillips screwdriver (#1)
Internal/ Flush-Mount	Encloses the digital operator in the panel. The front of the digital operator is flush with the outside of the panel.	Installation Support Set A (for mounting with screws through holes in the panel)	EZZ020642A	Phillips screwdriver (#1, #2)
		Installation Support Set B (for use with threaded studs that are fixed to the panel)	EZZ020642B	Phillips screwdriver (#1) Wrench (7 mm)

NOTICE: *Prevent foreign matter such as metal shavings or wire clippings from falling into the drive during installation and project construction. Failure to comply could result in damage to the drive. Place a temporary cover over the top of the drive during installation. Remove the temporary cover before drive start-up, as the cover will reduce ventilation and cause the drive to overheat.*

External/Face-Mount

1. Cut an opening in the enclosure panel for the digital operator as shown in ***Figure 2.12***.
2. Position the digital operator so the display faces outwards, and mount it to the enclosure panel as shown in ***Figure 2.11***.

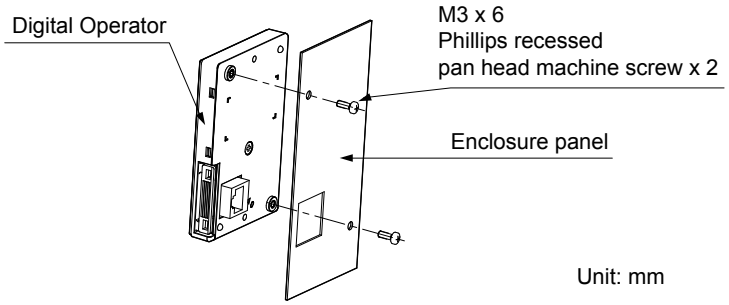

Figure 2.11 External/Face-Mount Installation

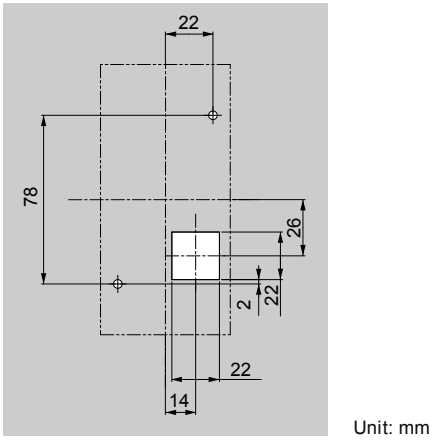

Figure 2.12 Panel Cut-Out Dimensions (External/Face-Mount Installation)

Internal/Flush-Mount

An internal flush-mount requires an installation support set that must be purchased separately. Contact Yaskawa or a Yaskawa representative to order an installation support set and mounting hardware. *Figure 2.13* illustrates how to attach the Installation Support Set A.

1. Cut an opening in the enclosure panel for the digital operator as shown in *Figure 2.14*.
2. Mount the digital operator to the installation support.
3. Mount the installation support set and digital operator to the enclosure panel.

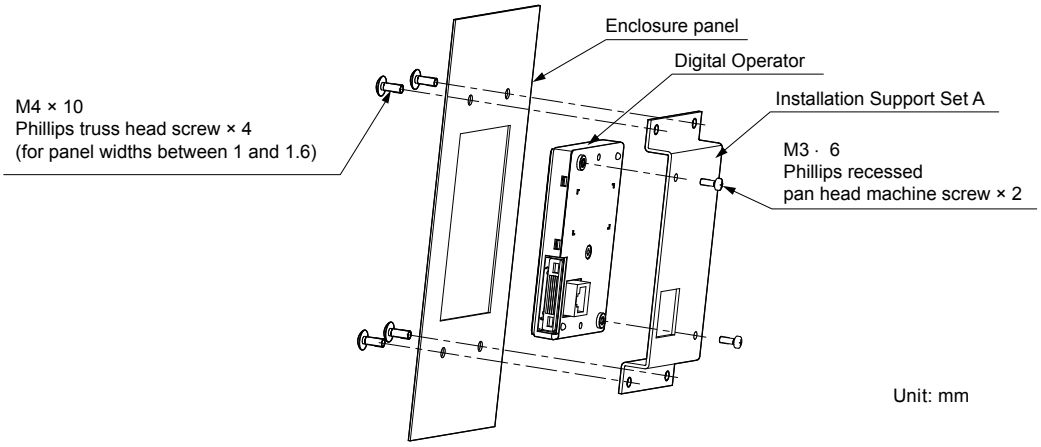

Figure 2.13 Internal/Flush Mount Installation

Note: Use a gasket between the enclosure panel and the digital operator in environments with a significant amount of dust or other airborne debris.

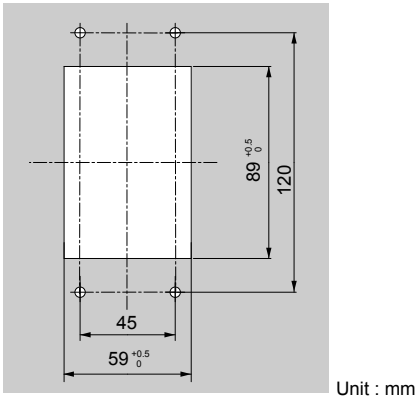

Figure 2.14 Panel Cut-Out Dimensions (Internal/Flush-Mount Installation)

◆ Exterior and Mounting Dimensions

Table 2.4 Drive Models and Types

Protective Design	Drive Model			Page
	Three-Phase 200 V Class	Three-Phase 400 V Class	Three-Phase 600 V Class	
IP20/NEMA 1, UL Type 1 Enclosure	2A0004F 2A0006F 2A0008F 2A0010F 2A0012F 2A0018F 2A0021F 2A0030F 2A0040F 2A0056F 2A0069F 2A0081F 2A0110F 2A0138F 2A0169F 2A0211F	4A0002F 4A0004F 4A0005F 4A0007F 4A0009F 4A0011F 4A0018F 4A0023F 4A0031F 4A0038F 4A0044F 4A0058F 4A0072F 4A0088F 4A0103F 4A0139F 4A0165F	5A0003F 5A0004F 5A0006F 5A0009F 5A0011F 5A0017F 5A0022F 5A0027F 5A0032F 5A0041F 5A0052F 5A0062F 5A0077F 5A0099F	*62*
IP00/Open Type Enclosure	2A0250A <1> 2A0312A <1> 2A0360A <1> 2A0415A <2>	4A0208A <1> 4A0250A <1> 4A0296A <1> 4A0362A <1> 4A0414A <2> 4A0515A <2> 4A0675A <2> 4A0930A <2> 4A1200A <2>	5A0125A <1> 5A0145A <1> 5A0192A <1> 5A0242A <1>	*68*
Flange Type Enclosure (NEMA 12 Backside)	2A0004U 2A0006U 2A0008U 2A0010U 2A0012U 2A0018U 2A0021U 2A0030U 2A0040U 2A0056U 2A0069U 2A0081U 2A0110U 2A0138U 2A0169U 2A0211U 2A0250U 2A0312U 2A0360U 2A0415U	4A0002U 4A0004U 4A0005U 4A0007U 4A0009U 4A0011U 4A0018U 4A0023U 4A0031U 4A0038U 4A0044U 4A0058U 4A0072U 4A0088U 4A0103U 4A0139U 4A0165U 4A0208U 4A0250U 4A0296U 4A0362U 4A0414U 4A0515U 4A0675U 4A0930U 4A1200U	5A0003U 5A0004U 5A0006U 5A0009U 5A0011U 5A0017U 5A0022U 5A0027U 5A0032U 5A0041U 5A0052U 5A0062U 5A0077U 5A0099U 5A0125U 5A0145U 5A0192U 5A0242U	*71*

<1> Customers may convert these models to IP20/NEMA 1, UL Type 1 enclosures using an IP20/NEMA 1, UL Type 1 Kit. ***Refer to IP20/NEMA 1, UL Type 1 Kit Selection on page 70*** to select the appropriate kit.

<2> Contact a Yaskawa representative for IP20/NEMA 1, UL Type 1 Kit availability for these models.

■ IP20/NEMA 1, UL Type 1 Enclosure Drives

Note: Removing the top protective cover or bottom conduit bracket from an IP20/NEMA 1, UL Type 1 enclosure drive voids NEMA 1, UL Type 1 protection while maintaining IP20 conformity.

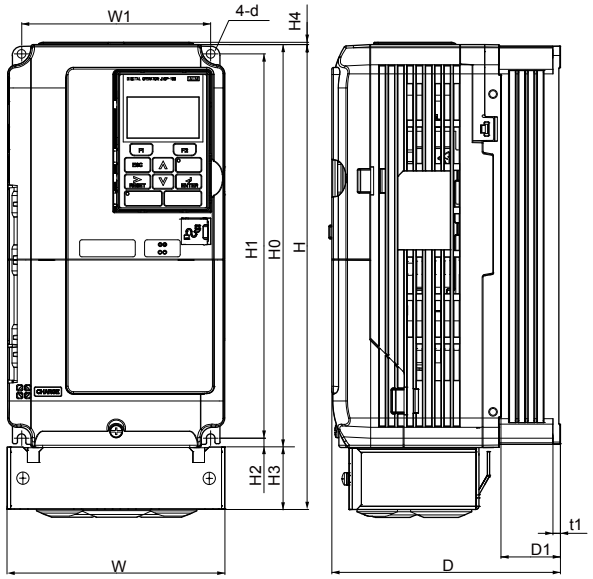

Figure 1

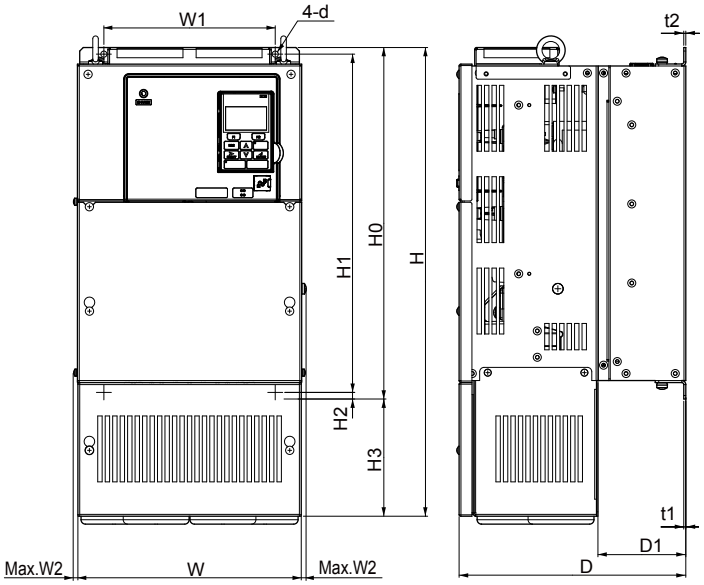

Figure 2

Table 2.5 Dimensions for IP20/NEMA 1, UL Type 1 Enclosure: 200 V Class

Drive Model	Figure	Dimensions mm (in)														Wt. kg (lb)
		W	H	D	W1	W2	H0	H1	H2	H3	H4	D1	t1	t2	d	
2A0004F	1 <1>	140 (5.51)	300 (11.81)	147 (5.79)	122 (4.80)	–	260 (10.24)	248 (9.76)	6 (0.24)	40 (1.57)	1.5 (0.06)	38 (1.50)	5 (0.20)	–	M5	3.3 (7.3)
2A0006F		140 (5.51)	300 (11.81)	147 (5.79)	122 (4.80)	–	260 (10.24)	248 (9.76)	6 (0.24)	40 (1.57)	1.5 (0.06)	38 (1.50)	5 (0.20)	–	M5	3.3 (7.3)
2A0008F		140 (5.51)	300 (11.81)	147 (5.79)	122 (4.80)	–	260 (10.24)	248 (9.76)	6 (0.24)	40 (1.57)	1.5 (0.06)	38 (1.50)	5 (0.20)	–	M5	3.4 (7.5)
2A0010F		140 (5.51)	300 (11.81)	147 (5.79)	122 (4.80)	–	260 (10.24)	248 (9.76)	6 (0.24)	40 (1.57)	1.5 (0.06)	38 (1.50)	5 (0.20)	–	M5	3.4 (7.5)
2A0012F		140 (5.51)	300 (11.81)	147 (5.79)	122 (4.80)	–	260 (10.24)	248 (9.76)	6 (0.24)	40 (1.57)	1.5 (0.06)	38 (1.50)	5 (0.20)	–	M5	3.4 (7.5)
2A0018F		140 (5.51)	300 (11.81)	164 (6.46)	122 (4.80)	–	260 (10.24)	248 (9.76)	6 (0.24)	40 (1.57)	1.5 (0.06)	55 (2.17)	5 (0.20)	–	M5	3.8 (8.2)
2A0021F		140 (5.51)	300 (11.81)	164 (6.46)	122 (4.80)	–	260 (10.24)	248 (9.76)	6 (0.24)	40 (1.57)	1.5 (0.06)	55 (2.17)	5 (0.20)	–	M5	3.8 (8.2)
2A0030F		140 (5.51)	300 (11.81)	167 (6.57)	122 (4.80)	–	260 (10.24)	248 (9.76)	6 (0.24)	40 (1.57)	1.5 (0.06)	55 (2.17)	5 (0.20)	–	M5	4.2 (9.3)
2A0040F		140 (5.51)	300 (11.81)	167 (6.57)	122 (4.80)	–	260 (10.24)	248 (9.76)	6 (0.24)	40 (1.57)	1.5 (0.06)	55 (2.17)	5 (0.20)	–	M5	4.2 (9.3)
2A0056F		180 (7.09)	340 (13.39)	187 (7.36)	160 (6.30)	–	300 (11.81)	284 (11.18)	7.9 (0.31)	40 (1.57)	1.5 (0.06)	75 (2.95)	5 (0.20)	–	M5	5.9 (13.0)
2A0069F		220 (8.66)	400 (15.75)	197 (7.76)	192 (7.56)	–	350 (13.78)	335 (13.19)	7.9 (0.31)	50 (1.97)	1.5 (0.06)	78 (3.07)	5 (0.20)	–	M6	9 (20.1)
2A0081F		220 (8.66)	400 (15.75)	197 (7.76)	192 (7.56)	–	350 (13.78)	335 (13.19)	7.9 (0.31)	50 (1.97)	1.5 (0.06)	78 (3.07)	5 (0.20)	–	M6	10 (22.0)
2A0110F	2 <1>	254 (10.00)	534 (21.02)	258 (10.16)	195 (7.68)	7.9 (0.31)	400 (15.75)	385 (15.16)	7.7 (0.30)	134 (5.28)	1.5 (0.06)	100 (3.94)	2.2 (0.09)	2.286 (0.09)	M6	23 (50.7)
2A0138F		279 (10.98)	614 (24.17)	258 (10.16)	220 (8.66)	7.9 (0.31)	450 (17.72)	435 (17.13)	7.7 (0.30)	164 (6.46)	–	100 (3.94)	2.2 (0.09)	2.286 (0.09)	M6	28 (61.7)
2A0169F		329 (12.95)	730 (28.74)	283 (11.14)	260 (10.24)	7.9 (0.31)	550 (21.65)	535 (21.06)	7.7 (0.30)	180 (7.09)	–	110 (4.33)	2.2 (0.09)	2.286 (0.09)	M6	41 (90.4)
2A0211F		329 (12.95)	730 (28.74)	283 (11.14)	260 (10.24)	7.9 (0.31)	550 (21.65)	535 (21.06)	7.7 (0.30)	180 (7.09)	–	110 (4.33)	2.2 (0.09)	2.286 (0.09)	M6	42 (92.6)

Drive Model	Figure	Dimensions mm (in)														Wt. kg (lb)
		W	H	D	W1	W2	H0	H1	H2	H3	H4	D1	t1	t2	d	
Dimensions below are the dimensions of IP00/Open Type models after customer installation of the appropriate IP20/NEMA 1, UL Type 1 Kit.																
2A0250A	2	456 (17.95)	960 (37.80)	330 (12.99)	325 (12.80)	7.9 (0.31)	28 (27.76)	680 (26.77)	12 (0.49)	255 (10.04)	–	130 (5.12)	3.3 (0.13)	3.3 (0.13)	M10	83 (183.0)
2A0312A		456 (17.95)	960 (37.80)	330 (12.99)	325 (12.80)	7.9 (0.31)	28 (27.76)	680 (26.77)	12 (0.49)	255 (10.04)	–	130 (5.12)	3.3 (0.13)	3.30 (0.13)	M10	88 (194.0)
2A0360A		194 (19.84)	1168 (45.98)	35 (13.78)	370 (14.57)	7.9 (0.31)	800 (31.50)	773 (30.43)	13 (0.51)	368 (14.49)	–	130 (5.12)	4.6 (0.18)	4.6 (0.18)	M12	108 (238.1)

<1> Removing the top protective cover from an IP20/NEMA 1, UL Type 1 enclosure drive voids NEMA 1, UL Type 1 protection while retaining IP20 conformity.

Table 2.6 Dimensions for IP20/NEMA 1, UL Type 1 Enclosure: 400 V Class

Drive Model	Figure	Dimensions mm (in)														Wt. kg (lb)
		W	H	D	W1	W2	H0	H1	H2	H3	H4	D1	t1	t2	d	
4A0002F	1 <1>	140 (5.51)	300 (11.81)	147 (5.79)	122 (4.80)	–	260 (10.24)	248 (9.76)	6 (0.24)	40 (1.57)	1.5 (0.06)	38 (1.50)	5 (0.20)	–	M5	3.4 (7.5)
4A0004F		140 (5.51)	300 (11.81)	147 (5.79)	122 (4.80)	–	260 (10.24)	248 (9.76)	6 (0.24)	40 (1.57)	1.5 (0.06)	38 (1.50)	5 (0.20)	–	M5	3.4 (7.5)
4A0005F		140 (5.51)	300 (11.81)	147 (5.79)	122 (4.80)	–	260 (10.24)	248 (9.76)	6 (0.24)	40 (1.57)	1.5 (0.06)	38 (1.50)	5 (0.20)	–	M5	3.4 (7.5)
4A0007F		140 (5.51)	300 (11.81)	164 (6.46)	122 (4.80)	–	260 (10.24)	248 (9.76)	6 (0.24)	40 (1.57)	1.5 (0.06)	55 (2.17)	5 (0.20)	–	M5	3.6 (7.9)
4A0009F		140 (5.51)	300 (11.81)	164 (6.46)	122 (4.80)	–	260 (10.24)	248 (9.76)	6 (0.24)	40 (1.57)	1.5 (0.06)	55 (2.17)	5 (0.20)	–	M5	3.8 (8.2)
4A0011F		140 (5.51)	300 (11.81)	164 (6.46)	122 (4.80)	–	260 (10.24)	248 (9.76)	6 (0.24)	40 (1.57)	1.5 (0.06)	55 (2.17)	5 (0.20)	–	M5	3.8 (8.2)
4A0018F		140 (5.51)	300 (11.81)	167 (6.57)	122 (4.80)	–	260 (10.24)	248 (9.76)	6 (0.24)	40 (1.57)	1.5 (0.06)	55 (2.17)	5 (0.20)	–	M5	4.0 (9.0)
4A0023F		140 (5.51)	300 (11.81)	167 (6.57)	122 (4.80)	–	260 (10.24)	248 (9.76)	6 (0.24)	40 (1.57)	1.5 (0.06)	55 (2.17)	5 (0.20)	–	M5	4.0 (9.0)
4A0031F		180 (7.09)	340 (13.39)	167 (6.57)	160 (6.30)	–	300 (11.81)	284 (11.18)	7.9 (0.31)	40 (1.57)	1.5 (0.06)	55 (2.17)	5 (0.20)	–	M5	5.8 (12.6)
4A0038F		180 (7.09)	340 (13.39)	187 (7.36)	160 (6.30)	–	300 (11.81)	284 (11.18)	7.9 (0.31)	40 (1.57)	1.5 (0.06)	75 (2.95)	5 (0.20)	–	M5	6.0 (13.2)
4A0044F		220 (8.66)	400 (15.75)	197 (7.76)	195 (7.68)	–	35 (13.78)	335 (13.19)	7.9 (0.31)	50 (1.97)	1.5 (0.06)	78 (3.07)	5 (0.20)	–	M6	8.8 (19.2)
4A0058F	2 <1>	254 (10.00)	465 (18.31)	258 (10.16)	195 (7.68)	7.9 (0.31)	400 (15.75)	385 (15.16)	7.7 (0.30)	65 (2.56)	–	100 (3.94)	2.2 (0.09)	2.2 (0.09)	M6	23 (50.7)
4A0072F		279 (10.98)	515 (20.28)	258 (10.16)	220 (8.66)	7.9 (0.31)	450 (17.72)	435 (17.13)	7.7 (0.30)	65 (2.56)	–	100 (3.94)	2.2 (0.09)	2.2 (0.09)	M6	27 (59.5)
4A0088F		329 (12.95)	630 (24.80)	258 (10.16)	260 (10.24)	7.9 (0.31)	509 (20.08)	495 (19.49)	7.7 (0.30)	120 (4.72)	–	105 (4.13)	2.2 (0.09)	3.3 (0.13)	M6	39 (86.0)
4A0103F		329 (12.95)	630 (24.80)	258 (10.16)	260 (10.24)	7.9 (0.31)	509 (20.08)	495 (19.49)	7.7 (0.30)	120 (4.72)	–	105 (4.13)	2.2 (0.09)	3.3 (0.13)	M6	39 (86.0)
4A0139F		329 (12.95)	730 (28.74)	283 (11.14)	260 (10.24)	7.9 (0.31)	550 (21.65)	535 (21.06)	7.7 (0.30)	180 (7.09)	–	110 (4.33)	2.2 (0.09)	2.2 (0.09)	M6	45 (99.2)
4A0165F		329 (12.95)	730 (28.74)	283 (11.14)	260 (10.24)	7.9 (0.31)	550 (21.65)	535 (21.06)	7.7 (0.30)	180 (7.09)	–	110 (4.33)	2.2 (0.09)	2.2 (0.09)	M6	46 (101.4)
Dimensions below are the dimensions of IP00/Open Type models after customer installation of the appropriate IP20/NEMA 1, UL Type 1 Kit.																
4A0208A	2	456 (17.95)	960 (37.80)	330 (12.99)	325 (12.80)	7.9 (0.31)	28 (27.76)	680 (26.77)	12 (0.49)	255 (10.04)	–	130 (5.12)	3.3 (0.13)	3.3 (0.13)	M10	87 (191.8)
4A0250A		194 (19.84)	1168 (45.98)	35 (13.78)	370 (14.57)	7.9 (0.31)	800 (31.50)	773 (30.43)	13 (0.51)	368 (14.49)	–	130 (5.12)	4.6 (0.18)	4.6 (0.18)	M12	106 (233.7)
4A0296A		194 (19.84)	1168 (45.98)	35 (13.78)	370 (14.57)	7.9 (0.31)	800 (31.50)	773 (30.43)	13 (0.51)	368 (14.49)	–	130 (5.12)	4.6 (0.18)	4.6 (0.18)	M12	112 (246.9)
4A0362A		194 (19.84)	1168 (45.98)	35 (13.78)	370 (14.57)	7.9 (0.31)	800 (31.50)	773 (30.43)	13 (0.51)	368 (14.49)	–	130 (5.12)	4.6 (0.18)	4.6 (0.18)	M12	117 (257.9)

<1> Removing the top protective cover from an IP20/NEMA 1, UL Type 1 enclosure drive voids NEMA 1, UL Type 1 protection while retaining IP20 conformity.

Table 2.7 Dimensions for IP20/NEMA 1, UL Type 1 Enclosure: 600 V Class

Drive Model	Figure	Dimensions mm (in)														Wt. kg (lb)
		W	H	D	W1	W2	H0	H1	H2	H3	H4	D1	t1	t2	d	
5A0003F	1 <1>	140 (5.51)	300 (11.81)	147 (5.79)	122 (4.80)	–	260 (10.24)	248 (9.76)	6 (0.24)	40 (1.57)	1.5 (0.06)	38 (1.50)	5 (0.20)	–	M5	3.4 (7.5)
5A0004F		140 (5.51)	300 (11.81)	147 (5.79)	122 (4.80)	–	260 (10.24)	248 (9.76)	6 (0.24)	40 (1.57)	1.5 (0.06)	38 (1.50)	5 (0.20)	–	M5	3.4 (7.5)
5A0006F		140 (5.51)	300 (11.81)	164 (6.46)	122 (4.80)	–	260 (10.24)	248 (9.76)	6 (0.24)	40 (1.57)	1.5 (0.06)	55 (2.17)	5 (0.20)	–	M5	3.8 (8.2)
5A0009F		140 (5.51)	300 (11.81)	164 (6.46)	122 (4.80)	–	260 (10.24)	248 (9.76)	6 (0.24)	40 (1.57)	1.5 (0.06)	55 (2.17)	5 (0.20)	–	M5	3.8 (8.2)
5A0011F		140 (5.51)	300 (11.81)	167 (6.57)	122 (4.80)	–	260 (10.24)	248 (9.76)	6 (0.24)	40 (1.57)	1.5 (0.06)	55 (2.17)	5 (0.20)	–	M5	4.0 (9.0)
5A0017F		180 (7.09)	340 (13.39)	187 (7.36)	160 (6.30)	–	300 (11.81)	284 (11.18)	7.9 (0.31)	40 (1.57)	1.5 (0.06)	75 (2.95)	5 (0.20)	–	M5	6.0 (13.2)
5A0022F		180 (7.09)	340 (13.39)	187 (7.36)	160 (6.30)	–	300 (11.81)	284 (11.18)	7.9 (0.31)	40 (1.57)	1.5 (0.06)	75 (2.95)	5 (0.20)	–	M5	6.0 (13.2)
5A0027F		220 (8.66)	400 (15.75)	197 (7.76)	192 (7.56)	–	35 (13.78)	335 (13.19)	7.9 (0.31)	50 (1.97)	1.5 (0.06)	78 (3.07)	5 (0.20)	–	M6	8.8 (19.2)
5A0032F		220 (8.66)	400 (15.75)	197 (7.76)	192 (7.56)	–	35 (13.78)	335 (13.19)	7.9 (0.31)	50 (1.97)	1.5 (0.06)	78 (3.07)	5 (0.20)	–	M6	8.8 (19.2)
5A0041F	2	279 (10.98)	515 (20.28)	258 (10.16)	220 (8.66)	7.9 (0.31)	450 (17.72)	435 (17.13)	7.7 (0.30)	65 (2.56)	–	100 (3.94)	2.2 (0.09)	2.2 (0.09)	M6	27 (59.5)
5A0052F		279 (10.98)	515 (20.28)	258 (10.16)	220 (8.66)	7.9 (0.31)	450 (17.72)	435 (17.13)	7.7 (0.30)	65 (2.56)	–	100 (3.94)	2.2 (0.09)	2.2 (0.09)	M6	27 (59.5)
5A0062F		329 (12.95)	730 (28.74)	283 (11.14)	260 (10.24)	7.9 (0.31)	550 (21.65)	535 (21.06)	7.7 (0.30)	180 (7.09)	–	110 (4.33)	2.2 (0.09)	2.2 (0.09)	M6	45 (99.2)
5A0077F		329 (12.95)	730 (28.74)	283 (11.14)	260 (10.24)	7.9 (0.31)	550 (21.65)	535 (21.06)	7.7 (0.30)	180 (7.09)	–	110 (4.33)	2.2 (0.09)	2.2 (0.09)	M6	45 (99.2)
5A0099F		329 (12.95)	730 (28.74)	283 (11.14)	260 (10.24)	7.9 (0.31)	550 (21.65)	535 (21.06)	7.7 (0.30)	180 (7.09)	–	110 (4.33)	2.2 (0.09)	2.2 (0.09)	M6	45 (99.2)
Dimensions below are the dimensions of IP00/Open Type models after customer installation of the appropriate IP20/NEMA 1, UL Type 1 Kit.																
5A0125A	2	456 (17.95)	960 (37.80)	330 (12.99)	325 (12.80)	7.9 (0.31)	28 (27.76)	680 (26.77)	12 (0.49)	255 (10.04)	–	130 (5.12)	3.3 (0.13)	3.3 (0.13)	M10	87 (191.8)
5A0145A		456 (17.95)	960 (37.80)	330 (12.99)	325 (12.80)	7.9 (0.31)	28 (27.76)	680 (26.77)	12 (0.49)	255 (10.04)	–	130 (5.12)	3.3 (0.13)	3.3 (0.13)	M10	87 (191.8)
5A0192A		194 (19.84)	1168 (45.98)	35 (13.78)	370 (14.57)	7.9 (0.31)	800 (31.50)	773 (30.43)	13 (0.51)	368 (14.49)	–	130 (5.12)	4.6 (0.18)	4.6 (0.18)	M12	106 (233.7)
5A0242A		194 (19.84)	1168 (45.98)	35 (13.78)	370 (14.57)	7.9 (0.31)	800 (31.50)	773 (30.43)	13 (0.51)	368 (14.49)	–	130 (5.12)	4.6 (0.18)	4.6 (0.18)	M12	117 (257.9)

<1> Removing the top protective cover or bottom conduit bracket from an IP20/NEMA 1, UL Type 1 enclosure drive voids NEMA 1, UL Type 1 protection while maintaining IP20 conformity.

IP20/NEMA 1, UL Type 1 Enclosure Conduit Bracket Dimensions

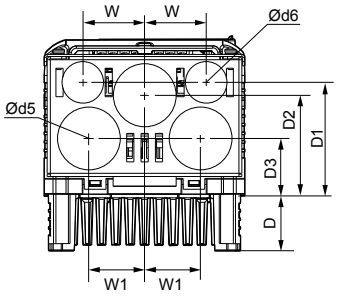

Figure 1

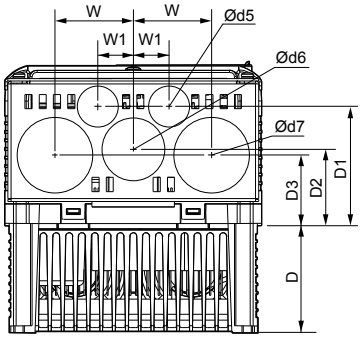

Figure 2

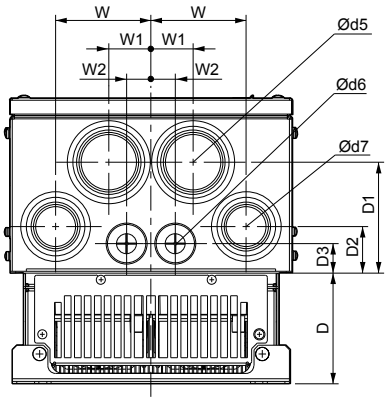

Figure 3

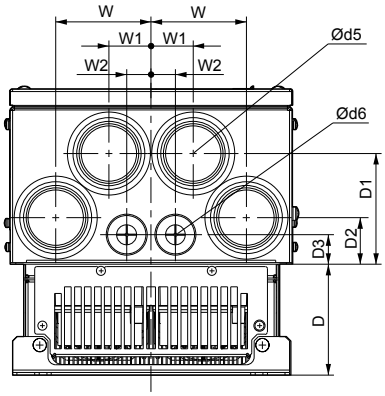

Figure 4

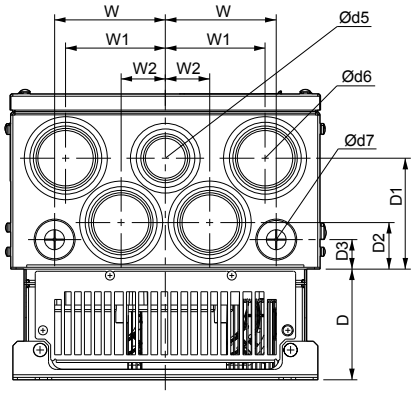

Figure 5

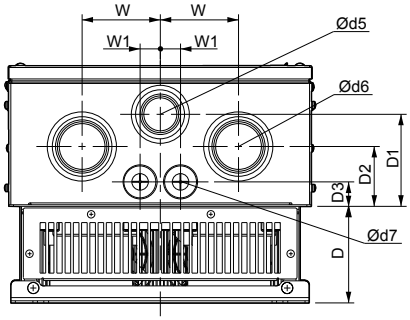

Figure 6

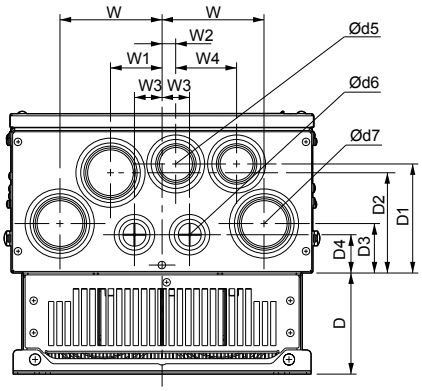

Figure 7

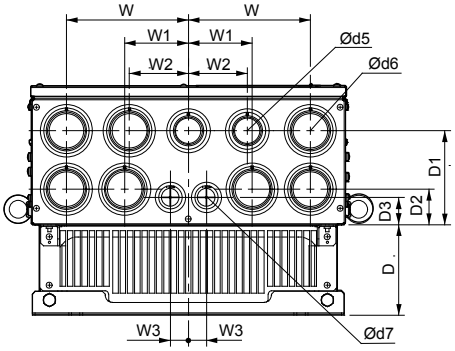

Figure 8

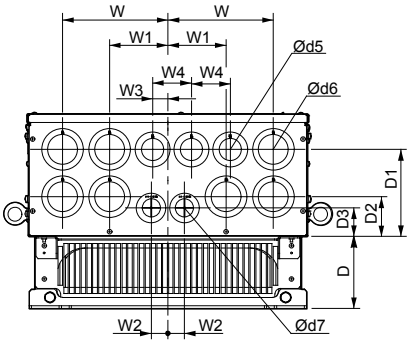

Figure 9

Table 2.8 Conduit Bracket Dimensions for IP20/NEMA 1, UL Type 1

Drive Model	Figure	Dimensions mm (in)										Diameter mm (in)		
		W	D	W1	W2	W3	W4	D1	D2	D3	D4	d5	d6	d7
200 V Class														
2A0004F	1	43 (1.7)	38 (1.5)	38 (1.5)	–	–	–	41 (1.6)	71 (2.8)	79 (3.1)	–	23 (0.9)	36 (1.4)	–
2A0006F		43 (1.7)	38 (1.5)	38 (1.5)	–	–	–	41 (1.6)	71 (2.8)	79 (3.1)	–	23 (0.9)	36 (1.4)	–
2A0008F		43 (1.7)	38 (1.5)	38 (1.5)	–	–	–	41 (1.6)	71 (2.8)	79 (3.1)	–	–	–	–
2A0010F		43 (1.7)	38 (1.5)	38 (1.5)	–	–	–	41 (1.6)	71 (2.8)	79 (3.1)	–	23 (0.9)	36 (1.4)	–
2A0012F		43 (1.7)	56 (2.2)	38 (1.5)	–	–	–	41 (1.6)	71 (2.8)	79 (3.1)	–	23 (0.9)	36 (1.4)	–

Drive Model	Figure	Dimensions mm (in)										Diameter mm (in)		
		W	D	W1	W2	W3	W4	D1	D2	D3	D4	d5	d6	d7
2A0018F	2	43 (1.7)	56 (2.2)	38 (1.5)	–	–	–	41 (1.6)	71 (2.8)	79 (3.1)	–	36 (1.4)	23 (0.9)	43 (1.7)
2A0021F		43 (1.7)	56 (2.2)	38 (1.5)	–	–	–	41 (1.6)	71 (2.8)	79 (3.1)	–	36 (1.4)	23 (0.9)	43 (1.7)
2A0030F		43 (1.7)	56 (2.2)	38 (1.5)	–	–	–	41 (1.6)	71 (2.8)	79 (3.1)	–	36 (1.4)	23 (0.9)	43 (1.7)
2A0040F		25 (1.0)	76 (3.0)	56 (2.2)	–	–	–	48 (1.9)	84 (3.3)	53 (2.1)	–	36 (1.4)	23 (0.9)	43 (1.7)
2A0056F		25 (1.0)	76 (3.0)	56 (2.2)	–	–	–	48 (1.9)	84 (3.3)	53 (2.1)	–	36 (1.4)	23 (0.9)	43 (1.7)
2A0069F		28 (1.1)	79 (3.1)	64 (2.5)	–	–	–	51 (2.0)	86 (3.4)	56 (2.2)	–	36 (1.4)	23 (0.9)	43 (1.7)
2A0081F		28 (1.1)	79 (3.1)	64 (2.5)	–	–	–	51 (2.0)	86 (3.4)	56 (2.2)	–	36 (1.4)	23 (0.9)	43 (1.7)
2A0110F	4	86 (3.4)	99 (3.9)	38 (1.5)	23 (0.9)	–	–	99 (3.9)	43 (1.7)	25 (1.0)	–	61 (2.4)	28 (1.1)	–
2A0138F	5	99 (3.9)	99 (3.9)	89 (3.5)	41 (1.6)	–	–	99 (3.9)	43 (1.7)	25 (1.0)	–	51 (2.0)	61 (2.4)	28 (1.1)
2A0169F	7	111 (4.4)	109 (4.3)	56 (2.2)	15 (0.6)	30 (1.2)	66 (2.6)	119 (4.7)	109 (4.3)	53 (2.1)	41 (1.6)	51 (2.0)	36 (1.4)	61 (2.4)
2A0211F		111 (4.4)	109 (4.3)	56 (2.2)	15 (0.6)	30 (1.2)	66 (2.6)	119 (4.7)	109 (4.3)	53 (2.1)	41 (1.6)	51 (2.0)	36 (1.4)	61 (2.4)
2A0250A	8	175 (6.9)	130 (5.1)	91 (3.6)	84 (3.3)	25 (1.0)	–	137 (5.4)	51 (2.0)	41 (1.6)	–	51 (2.0)	61 (2.4)	36 (1.4)
2A0312A		175 (6.9)	130 (5.1)	91 (3.6)	84 (3.3)	25 (1.0)	–	137 (5.4)	51 (2.0)	41 (1.6)	–	51 (2.0)	61 (2.4)	36 (1.4)
2A0360A	9	191 (7.5)	130 (5.1)	104 (4.1)	30 (1.2)	28 (1.1)	71 (2.8)	157 (6.2)	71 (2.8)	51 (2.0)	–	51 (2.0)	61 (2.4)	43 (1.7)
400 V Class														
4A0002F	1	43 (1.7)	38 (1.5)	38 (1.5)	–	–	–	41 (1.6)	71 (2.8)	79 (3.1)	–	23 (0.9)	36 (1.4)	–
4A0004F		43 (1.7)	38 (1.5)	38 (1.5)	–	–	–	41 (1.6)	71 (2.8)	79 (3.1)	–	23 (0.9)	36 (1.4)	–
4A0005F		43 (1.7)	38 (1.5)	38 (1.5)	–	–	–	41 (1.6)	71 (2.8)	79 (3.1)	–	23 (0.9)	36 (1.4)	–
4A0007F		43 (1.7)	56 (2.2)	38 (1.5)	–	–	–	41 (1.6)	71 (2.8)	79 (3.1)	–	23 (0.9)	36 (1.4)	–
4A0009F		43 (1.7)	56 (2.2)	38 (1.5)	–	–	–	41 (1.6)	71 (2.8)	79 (3.1)	–	23 (0.9)	36 (1.4)	–
4A0011F		43 (1.7)	56 (2.2)	38 (1.5)	–	–	–	41 (1.6)	71 (2.8)	79 (3.1)	–	23 (0.9)	36 (1.4)	–
4A0018F		43 (1.7)	56 (2.2)	38 (1.5)	–	–	–	41 (1.6)	71 (2.8)	79 (3.1)	–	23 (0.9)	36 (1.4)	–
4A0023F	2	25 (1.0)	76 (3.0)	56 (2.2)	–	–	–	48 (1.9)	84 (3.3)	53 (2.1)	–	36 (1.4)	23 (0.9)	43 (1.7)
4A0031F		25 (1.0)	76 (3.0)	56 (2.2)	–	–	–	48 (1.9)	84 (3.3)	53 (2.1)	–	36 (1.4)	23 (0.9)	43 (1.7)
4A0038F		28 (1.1)	79 (3.1)	64 (2.5)	–	–	–	51 (2.0)	86 (3.4)	56 (2.2)	–	36 (1.4)	23 (0.9)	43 (1.7)
4A0044F		28 (1.1)	79 (3.1)	64 (2.5)	–	–	–	51 (2.0)	86 (3.4)	56 (2.2)	–	36 (1.4)	23 (0.9)	43 (1.7)
4A0058F	3	86 (3.4)	99 (3.9)	38 (1.5)	23 (0.9)	–	–	99 (3.9)	43 (1.7)	25 (1.0)	–	61 (2.4)	28 (1.1)	51 (2.0)
4A0072F		89 (3.5)	99 (3.9)	41 (1.6)	23 (0.9)	–	–	99 (3.9)	43 (1.7)	25 (1.0)	–	61 (2.4)	28 (1.1)	51 (2.0)
4A0088F	6	84 (3.3)	104 (4.1)	23 (0.9)	–	–	–	99 (3.9)	66 (2.6)	25 (1.0)	–	51 (2.0)	61 (2.4)	28 (1.1)
4A0103F		84 (3.3)	104 (4.1)	23 (0.9)	–	–	–	99 (3.9)	66 (2.6)	25 (1.0)	–	51 (2.0)	61 (2.4)	28 (1.1)

Drive Model	Figure	Dimensions mm (in)										Diameter mm (in)		
		W	D	W1	W2	W3	W4	D1	D2	D3	D4	d5	d6	d7
4A0139F	7	111 (4.4)	109 (4.3)	56 (2.2)	15 (0.6)	30 (1.2)	66 (2.6)	119 (4.7)	109 (4.3)	53 (2.1)	41 (1.6)	51 (2.0)	36 (1.4)	61 (2.4)
4A0165F		111 (4.4)	109 (4.3)	56 (2.2)	15 (0.6)	30 (1.2)	66 (2.6)	119 (4.7)	109 (4.3)	53 (2.1)	41 (1.6)	51 (2.0)	36 (1.4)	61 (2.4)
4A0208A	8	175 (6.9)	130 (5.1)	91 (3.6)	84 (3.3)	25 (1.0)	–	137 (5.4)	51 (2.0)	41 (1.6)	–	51 (2.0)	61 (2.4)	36 (1.4)
4A0250A	9	191 (7.5)	130 (5.1)	104 (4.1)	30 (1.2)	28 (1.1)	71 (2.8)	157 (6.2)	71 (2.8)	51 (2.0)	–	51 (2.0)	61 (2.4)	43 (1.7)
4A0296A		191 (7.5)	130 (5.1)	104 (4.1)	30 (1.2)	28 (1.1)	71 (2.8)	157 (6.2)	71 (2.8)	51 (2.0)	–	51 (2.0)	61 (2.4)	43 (1.7)
4A0362A		191 (7.5)	130 (5.1)	104 (4.1)	30 (1.2)	28 (1.1)	71 (2.8)	157 (6.2)	71 (2.8)	51 (2.0)	–	51 (2.0)	61 (2.4)	43 (1.7)
600 V Class														
5A0003F	1	43 (1.7)	38 (1.5)	38 (1.5)	–	–	–	41 (1.6)	71 (2.8)	79 (3.1)	–	23 (0.9)	36 (1.4)	–
5A0004F		43 (1.7)	38 (1.5)	38 (1.5)	–	–	–	41 (1.6)	71 (2.8)	79 (3.1)	–	23 (0.9)	36 (1.4)	–
5A0006F		43 (1.7)	56 (2.2)	38 (1.5)	–	–	–	41 (1.6)	71 (2.8)	79 (3.1)	–	23 (0.9)	36 (1.4)	–
5A0009F		43 (1.7)	56 (2.2)	38 (1.5)	–	–	–	41 (1.6)	71 (2.8)	79 (3.1)	–	23 (0.9)	36 (1.4)	–
5A0011F		43 (1.7)	56 (2.2)	38 (1.5)	–	–	–	41 (1.6)	71 (2.8)	79 (3.1)	–	23 (0.9)	36 (1.4)	–
5A0017F	2	25 (1.0)	76 (3.0)	56 (2.2)	–	–	–	48 (1.9)	84 (3.3)	53 (2.1)	–	36 (1.4)	23 (0.9)	43 (1.7)
5A0022F		25 (1.0)	76 (3.0)	56 (2.2)	–	–	–	48 (1.9)	84 (3.3)	53 (2.1)	–	36 (1.4)	23 (0.9)	43 (1.7)
5A0027F		28 (1.1)	79 (3.1)	64 (2.5)	–	–	–	51 (2.0)	86 (3.4)	56 (2.2)	–	36 (1.4)	23 (0.9)	43 (1.7)
5A0032F		28 (1.1)	79 (3.1)	64 (2.5)	–	–	–	51 (2.0)	86 (3.4)	56 (2.2)	–	36 (1.4)	23 (0.9)	43 (1.7)
5A0041F	3	89 (3.5)	99 (3.9)	41 (1.6)	23 (0.9)	–	–	99 (3.9)	43 (1.7)	25 (1.0)	–	61 (2.4)	28 (1.1)	51 (2.0)
5A0052F		89 (3.5)	99 (3.9)	41 (1.6)	23 (0.9)	–	–	99 (3.9)	43 (1.7)	25 (1.0)	–	61 (2.4)	28 (1.1)	51 (2.0)
5A0062F	7	111 (4.4)	109 (4.3)	56 (2.2)	15 (0.6)	30 (1.2)	66 (2.6)	119 (4.7)	109 (4.3)	53 (2.1)	41 (1.6)	51 (2.0)	36 (1.4)	61 (2.4)
5A0077F		111 (4.4)	109 (4.3)	56 (2.2)	15 (0.6)	30 (1.2)	66 (2.6)	119 (4.7)	109 (4.3)	53 (2.1)	41 (1.6)	51 (2.0)	36 (1.4)	61 (2.4)
5A0099F		111 (4.4)	109 (4.3)	56 (2.2)	15 (0.6)	30 (1.2)	66 (2.6)	119 (4.7)	109 (4.3)	53 (2.1)	41 (1.6)	51 (2.0)	36 (1.4)	61 (2.4)
5A0125A	8	175 (6.9)	130 (5.1)	91 (3.6)	84 (3.3)	25 (1.0)	–	137 (5.4)	51 (2.0)	41 (1.6)	–	51 (2.0)	61 (2.4)	36 (1.4)
5A0145A		175 (6.9)	130 (5.1)	91 (3.6)	84 (3.3)	25 (1.0)	–	137 (5.4)	51 (2.0)	41 (1.6)	–	51 (2.0)	61 (2.4)	36 (1.4)
5A0192A	9	191 (7.5)	130 (5.1)	104 (4.1)	30 (1.2)	28 (1.1)	71 (2.8)	157 (6.2)	71 (2.8)	51 (2.0)	–	51 (2.0)	61 (2.4)	43 (1.7)
5A0242A		191 (7.5)	130 (5.1)	104 (4.1)	30 (1.2)	28 (1.1)	71 (2.8)	157 (6.2)	71 (2.8)	51 (2.0)	–	51 (2.0)	61 (2.4)	43 (1.7)

Note: Removing the top protective cover or bottom conduit bracket from an IP20/NEMA 1, UL Type 1 enclosure drive voids NEMA 1, UL Type 1 protection while maintaining IP20 conformity.

■ IP00/Open Type Enclosure Drives

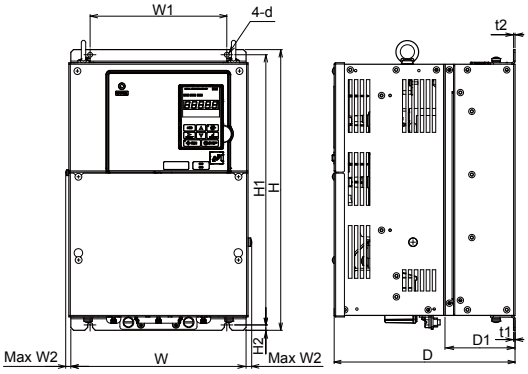

Figure 1

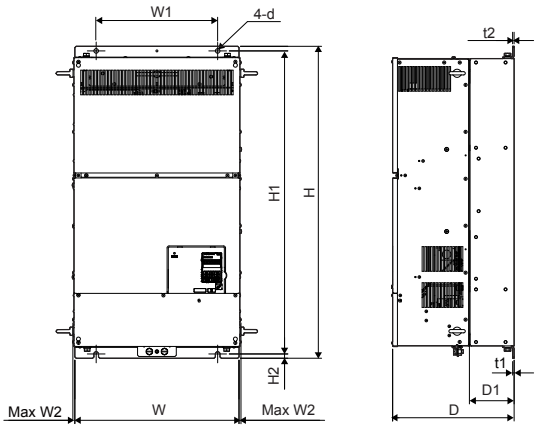

Figure 2

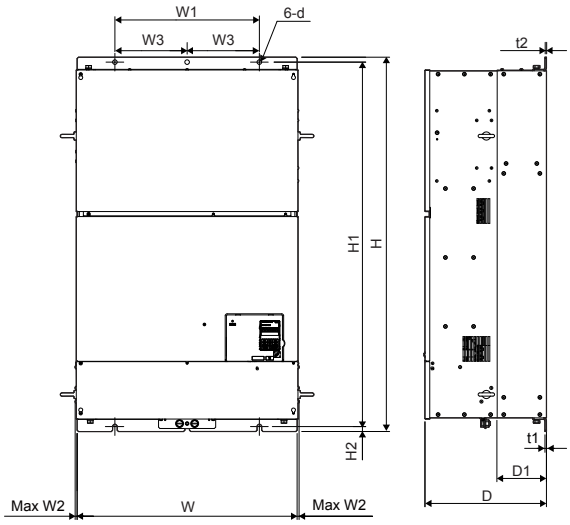

Figure 3

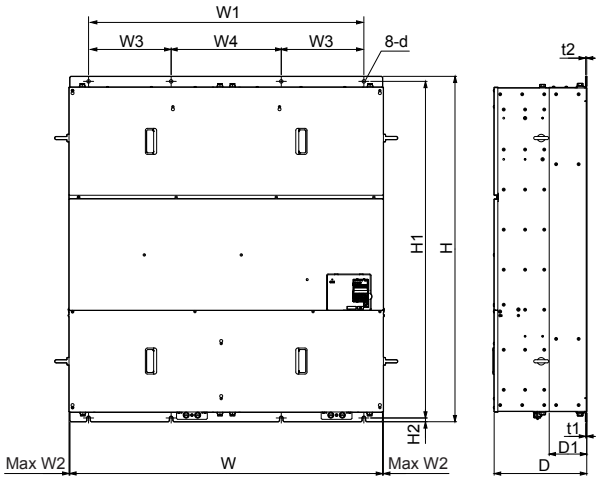

Figure 4

Table 2.9 Dimensions for IP00/Open Type Enclosure: 200 V Class

Drive Model	Figure	Dimensions mm (in)											Wt. kg (lb)
		W	H	D	W1	W2	H1	H2	D1	t1	t2	d	
2A0250A <1>	1	450 (17.72)	705 (27.76)	330 (12.99)	325 (12.80)	10 (0.39)	680 (26.77)	12 (0.49)	130 (5.12)	3.3 (0.13)	3.3 (0.13)	M10	76 (167.6)
2A0312A <1>		450 (17.72)	705 (27.76)	330 (12.99)	325 (12.80)	10 (0.39)	680 (26.77)	12 (0.49)	130 (5.12)	3.3 (0.13)	3.3 (0.13)	M10	80 (176.4)
2A0360A <1>		500 (19.69)	800 (31.50)	350 (13.78)	370 (14.57)	10 (0.39)	773 (30.43)	13 (0.51)	130 (5.12)	4.6 (0.18)	4.6 (0.18)	M12	98 (216.1)
2A0415A		500 (19.69)	800 (31.50)	350 (13.78)	370 (14.57)	10 (0.39)	773 (30.43)	13 (0.51)	130 (5.12)	4.6 (0.18)	4.6 (0.18)	M12	99 (218.3)

<1> Customers may convert these models to IP20/NEMA 1, UL Type 1 enclosures using an IP20/NEMA 1, UL Type 1 Kit.

Table 2.10 Dimensions for IP00/Open Type Enclosure: 400 V Class

Drive Model	Figure	Dimensions mm (in)													Wt. kg (lb)
		W	H	D	W1	W2	W3	W4	H1	H2	D1	t1	t2	d	
4A0208A <1>	1	450 (17.72)	705 (27.76)	330 (12.99)	325 (12.80)	10 (0.39)	–	–	680 (26.77)	12.4 (0.49)	130 (5.12)	3.3 (0.13)	3.3 (0.13)	M10	79 (174.2)
4A0250A <1>		500 (19.69)	800 (31.50)	350 (13.78)	370 (14.57)	10 (0.39)	–	–	773 (30.43)	13 (0.51)	130 (5.12)	4.6 (0.18)	4.6 (0.18)	M12	96 (211.6)
4A0296A <1>		500 (19.69)	800 (31.50)	350 (13.78)	370 (14.57)	10 (0.39)	–	–	773 (30.43)	13 (0.51)	130 (5.12)	4.6 (0.18)	4.6 (0.18)	M12	102 (224.9)
4A0362A <1>		500 (19.69)	800 (31.50)	350 (13.78)	370 (14.57)	10 (0.39)	–	–	773 (30.43)	13 (0.51)	130 (5.12)	4.6 (0.18)	4.6 (0.18)	M12	107 (235.9)
4A0414A	2	500 (19.69)	950 (37.40)	370 (14.57)	370 (14.57)	7.9 (0.31)	–	–	923 (36.34)	13 (0.51)	135 (5.31)	4.6 (0.18)	4.6 (0.18)	M12	125 (275.6)
4A0515A	3	670 (26.38)	1140 (44.88)	370 (14.57)	440 (17.32)	6 (0.24)	220 (8.66)	–	1110 (43.70)	15 (0.59)	150 (5.91)	4.6 (0.18)	4.6 (0.18)	M12	216 (476.2)
4A0675A		670 (26.38)	1140 (44.88)	370 (14.57)	440 (17.32)	6 (0.24)	220 (8.66)	–	1110 (43.70)	15 (0.59)	150 (5.91)	4.6 (0.18)	4.6 (0.18)	M12	221 (487.2)
4A0930A	4	1250 (49.21)	1380 (54.33)	370 (14.57)	1110 (43.70)	6 (0.24)	330 (13.00)	440 (17.32)	1345 (52.95)	15 (0.59)	150 (5.91)	4.6 (0.18)	4.6 (0.18)	M12	545 (1201.5)
4A1200A	4	1250 (49.21)	1380 (54.33)	370 (14.57)	1110 (43.70)	6 (0.24)	330 (13.00)	440 (17.32)	1345 (52.95)	15 (0.59)	150 (5.91)	4.6 (0.18)	4.6 (0.18)	M12	555 (1223.6)

<1> Customers may convert these models to IP20/NEMA 1, UL Type 1 enclosures using an IP20/NEMA 1, UL Type 1 Kit.

Table 2.11 Dimensions for IP00/Open Type Enclosure: 600 V Class

Drive Model	Figure	Dimensions mm (in)													Wt. kg (lb)
		W	H	D	W1	W2	W3	W4	H1	H2	D1	t1	t2	d	
5A0125A <1>	1	450 (17.72)	705 (27.76)	330 (12.99)	325 (12.80)	10 (0.39)	–	–	680 (26.77)	12.4 (0.49)	130 (5.12)	3.3 (0.13)	3.3 (0.13)	M10	79 (174.2)
5A0145A <1>		450 (17.72)	705 (27.76)	330 (12.99)	325 (12.80)	10 (0.39)	–	–	680 (26.77)	12.4 (0.49)	130 (5.12)	3.3 (0.13)	3.3 (0.13)	M10	79 (174.2)
5A0192A <1>		500 (19.69)	800 (31.50)	350 (13.78)	370 (14.57)	10 (0.39)	–	–	773 (30.43)	13 (0.51)	130 (5.12)	4.6 (0.18)	4.6 (0.18)	M12	107 (235.9)
5A0242A <1>		500 (19.69)	800 (31.50)	350 (13.78)	370 (14.57)	10 (0.39)	–	–	773 (30.43)	13 (0.51)	130 (5.12)	4.6 (0.18)	4.6 (0.18)	M12	107 (235.9)

<1> Customers may convert these models to IP20/NEMA 1, UL Type 1 enclosures using an IP20/NEMA 1, UL Type 1 Kit.

IP20/NEMA 1, UL Type 1 Kit Selection

Customers may convert IP00/Open Type models to IP20/NEMA 1, UL Type 1 enclosures. Refer to ***Table 2.12*** to select the appropriate IP20/NEMA 1, UL Type 1 Kit when performing the conversion.

Contact a Yaskawa representative for IP20/NEMA 1, UL Type 1 Kit availability for IP00/Open Type models not listed.

Table 2.12 IP20/NEMA 1, UL Type 1 Kit Selection

IP00/Open Type Drive Model	IP20/NEMA 1, UL Type 1 Kit Code	Comments
2A0250A	100-054-503	***Refer to IP20/NEMA 1, UL Type 1 Enclosure Drives on page 62*** for drive dimensions with the IP20/NEMA 1, UL Type 1 Kit installed.
2A0312A		
2A0360A		
4A0208A		
4A0250A	100-054-504	
4A0296A		
4A0362A		
5A0125A	100-054-503	
5A0145A		
5A0192A	100-054-504	
5A0242A		

2.3 Flange Type Enclosure (NEMA 12 Backside) Dimensions & Heat Loss

NOTICE

Refer to the A1000 6-Phase/12-Pulse Input Installation Manual TOEPYAIA1U02 for information on 12-pulse Flange and non-Flange models. This manual is posted on the Yaskawa website, www.yaskawa.com.

◆ Flange Type Models 2A0004 to 2A0012, 4A0002 to 4A0005, and 5A0003 and 5A0004

■ Flange Type Exterior and Mounting Dimensions

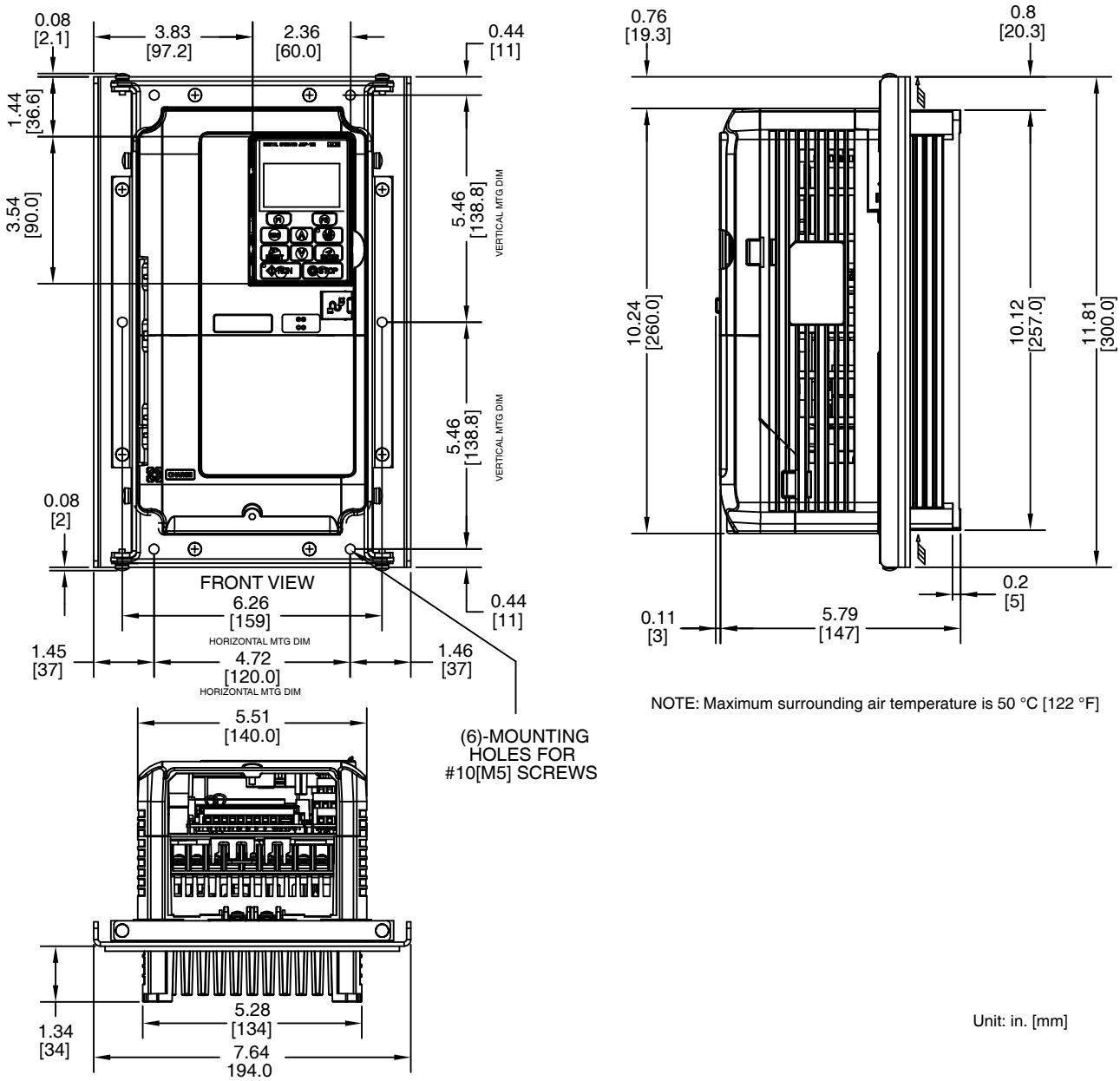

Figure 2.15 Models 2A0004 to 2A0012, 4A0002 to 4A0005, and 5A0003 and 5A0004

■ Flange Type Heat Loss Data

Table 2.13 Models 2A0004 to 2A0012, 4A0002 to 4A0005, and 5A0003 and 5A0004

Drive Model	Voltage Class	Heat Loss (W)						Wt. kg (lb)
		ND (Fc = 2 kHz)			HD (Fc = 8 kHz)			
		Internal	External	Total	Internal	External	Total	
2A0004	200	47.3	18.4	65.7	44.4	14.8	59.2	3.3 (7.3)
2A0006		51.4	30.8	82.2	47.6	24.1	71.7	3.3 (7.3)
2A0008		52.1	42.9	95.0	48.9	34.8	83.7	3.4 (7.5)
2A0010		58.4	56.7	115.1	52.1	42.9	95.0	3.4 (7.5)
2A0012		64.4	76.9	141.3	57.9	63.7	121.6	3.4 (7.5)

Drive Model	Voltage Class	Heat Loss (W)						Wt. kg (lb)
		ND (Fc = 2 kHz)			HD (Fc = 8 kHz)			
		Internal	External	Total	Internal	External	Total	
4A0002	400	47.9	19.8	67.7	44.7	15.9	60.6	3.4 (7.5)
4A0004		49.2	32.1	81.3	45.7	24.6	70.3	3.4 (7.5)
4A0005		52.8	44.6	97.4	49.4	37.4	86.8	3.4 (7.5)

Drive Model	Voltage Class	Heat Loss (W)						Wt. kg (lb)
		ND (Fc = 2 kHz)			HD (Fc = 8 kHz)			
		Internal	External	Total	Internal	External	Total	
5A0003	600	23.3	21.5	44.8	19.8	28.9	48.7	3.4 (7.5)
5A0004		33.6	27.5	61.1	27.6	54.3	81.9	3.4 (7.5)

■ Flange Type Panel Cutout Dimensions for External Heatsink Mounting

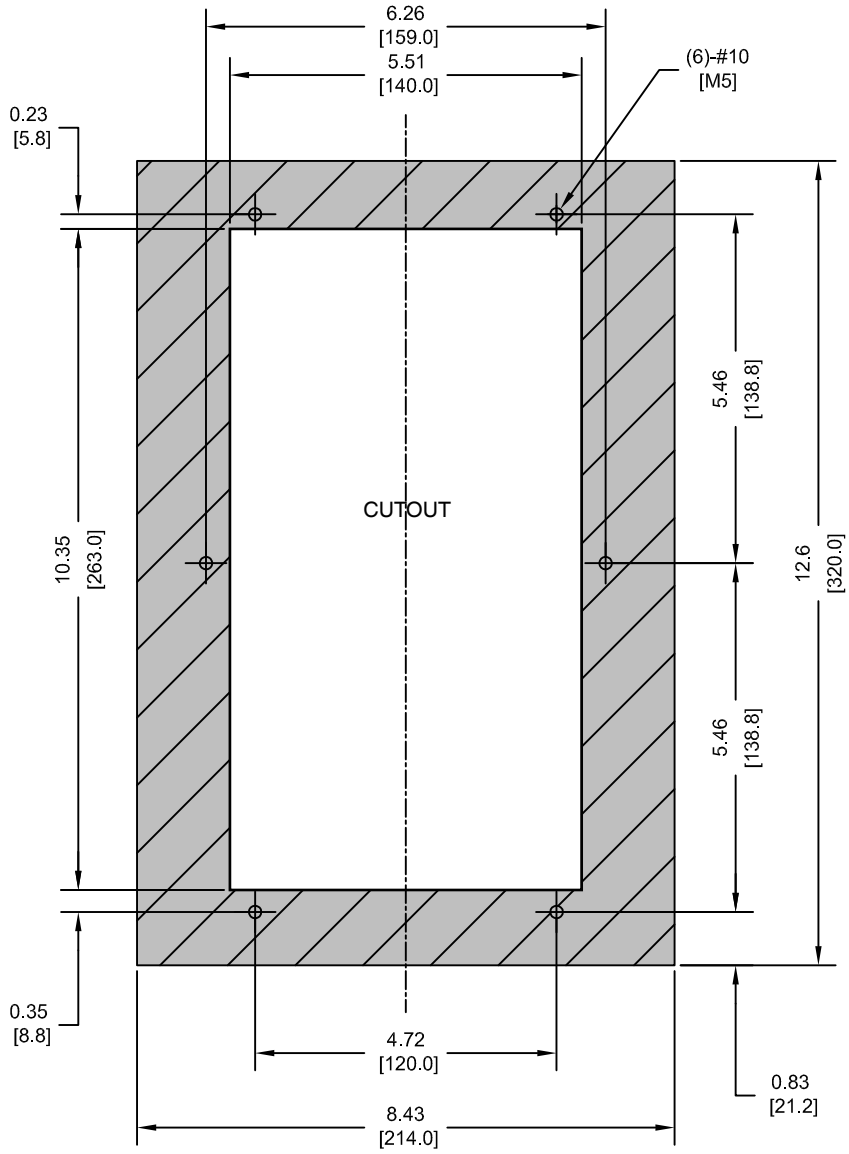

NOTES:
1. CUTOUT TOLERANCES:
   +/- 0.02 in. [0.5 mm]
2. EXPOSED HEATSINK
   RECOMMENDED CLEARANCE
   D=1.97 in. [50 mm] MINUS PANEL THICKNESS

Unit: in. [mm]

Figure 2.16 Models 2A0004 to 2A0012, 4A0002 to 4A0005, and 5A0003 and 5A0004

◆ Flange Type Models 2A0018 and 2A0021, 4A0007 to 4A0011, and 5A0006 and 5A0009

■ Flange Type Exterior and Mounting Dimensions

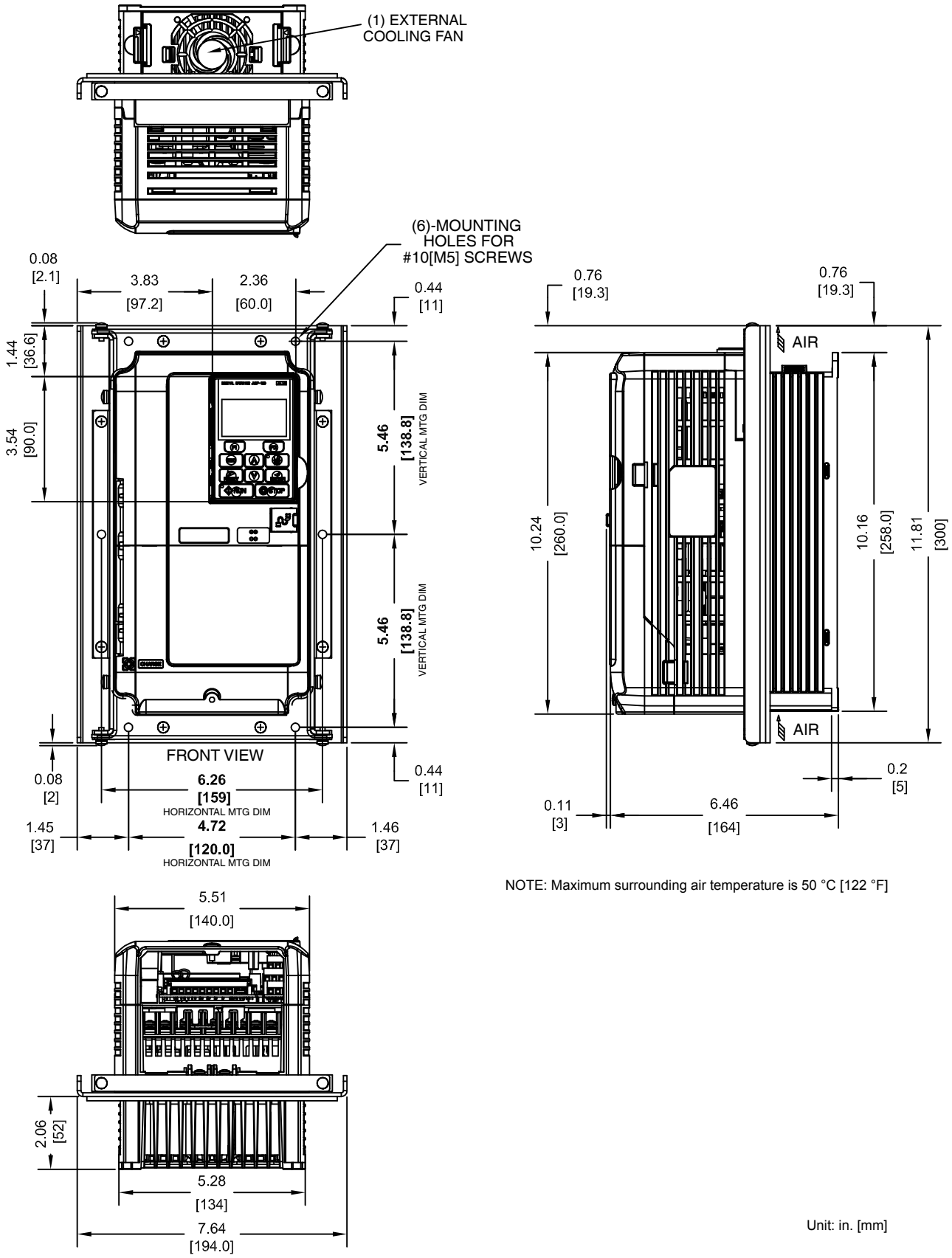

NOTE: Maximum surrounding air temperature is 50 °C [122 °F]

Figure 2.17 Models 2A0018 and 2A0021, 4A0007 to 4A0011, and 5A0006 and 5A0009

■ Flange Type Heat Loss Data

Table 2.14 Models 2A0018 and 2A0021, 4A0007 to 4A0011, and 5A0006 and 5A0009

Drive Model	Voltage Class	Heat Loss (W)						Wt. kg (lb)
		ND (Fc = 2 kHz)			HD (Fc = 8 kHz)			
		Internal	External	Total	Internal	External	Total	
2A0018	200	67.4	100.7	168.1	60.0	77.0	137.0	3.7 (8.1)
2A0021		83.3	138.4	221.7	67.4	100.7	168.1	3.7 (8.1)

Drive Model	Voltage Class	Heat Loss (W)						Wt. kg (lb)
		ND (Fc = 2 kHz)			HD (Fc = 8 kHz)			
		Internal	External	Total	Internal	External	Total	
4A0007	400	59.0	62.1	121.1	53.0	47.7	100.7	3.6 (7.9)
4A0009		60.4	65.8	126.2	55.3	53.1	108.4	3.7 (8.1)
4A0011		73.0	88.7	161.7	61.0	68.5	129.5	3.7 (8.1)

Drive Model	Voltage Class	Heat Loss (W)						Wt. kg (lb)
		ND (Fc = 2 kHz)			HD (Fc = 8 kHz)			
		Internal	External	Total	Internal	External	Total	
5A0006	600	43.7	28.1	71.8	27.0	53.0	80.0	3.7 (8.1)
5A0009		68.9	43.4	112.3	36.4	78.7	115.1	3.7 (8.1)

■ Flange Type Panel Cutout Dimensions for External Heatsink Mounting

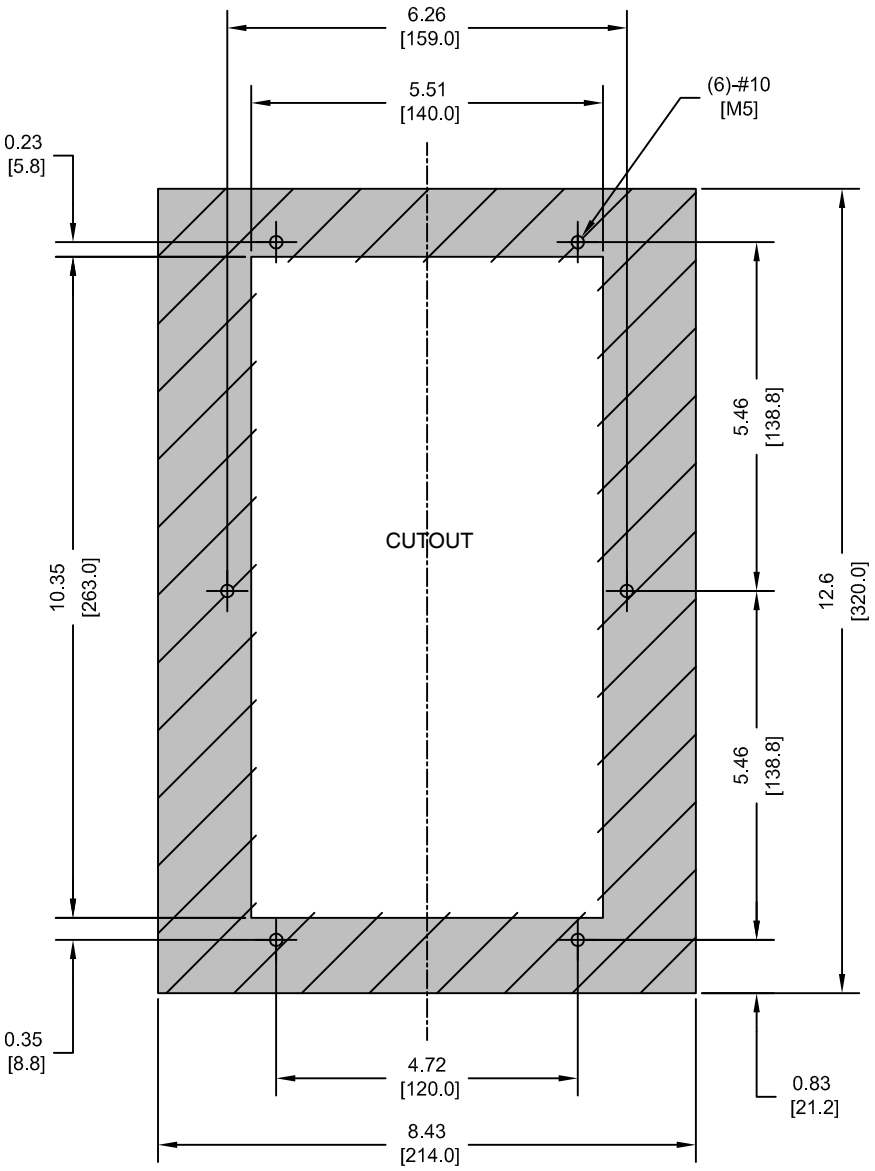

NOTES:
1. CUTOUT TOLERANCES:
   +/- 0.02 in. [0.5 mm]
2. EXPOSED HEATSINK
   RECOMMENDED CLEARANCE
   D=2.36 in. MINUS PANEL THICKNESS

Unit: in. [mm]

Figure 2.18 Models 2A0018 and 2A0021, 4A0007 to 4A0011, and 5A0006 and 5A0009

◆ Flange Type Models 2A0030 and 2A0040, 4A0018 and 4A0023, and 5A0011

■ Flange Type Exterior and Mounting Dimensions

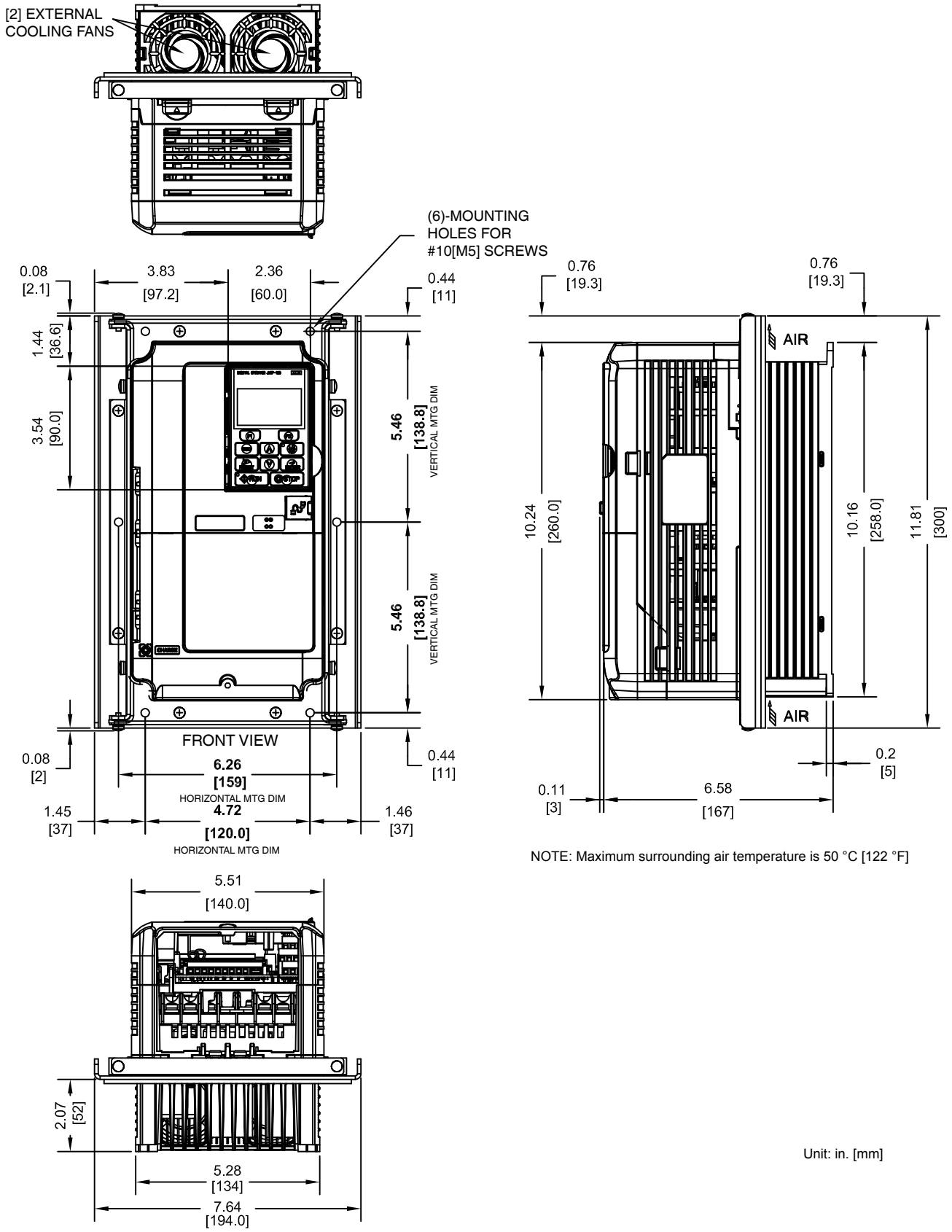

NOTE: Maximum surrounding air temperature is 50 °C [122 °F]

Figure 2.19 Models 2A0030 and 2A0040, 4A0018 and 4A0023, and 5A0011

■ Flange Type Heat Loss Data

Table 2.15 Models 2A0030 and 2A0040, 4A0018 and 4A0023, and 5A0011

Drive Model	Voltage Class	Heat Loss (W)						Wt. kg (lb)
		ND (Fc = 2 kHz)			HD (Fc = 8 kHz)			
		Internal	External	Total	Internal	External	Total	
2A0030	200	117.1	261.5	378.6	92.3	194.4	286.7	4.2 (9.2)
2A0040		144.5	292.8	437.3	104.8	213.8	318.6	4.2 (9.2)

Drive Model	Voltage Class	Heat Loss (W)						Wt. kg (lb)
		ND (Fc = 2 kHz)			HD (Fc = 8 kHz)			
		Internal	External	Total	Internal	External	Total	
4A0018	400	108.0	177.3	285.3	85.7	135.4	221.1	4.1 (9.0)
4A0023		138.1	215.9	354.0	97.0	149.9	246.9	4.1 (9.0)

Drive Model	Voltage Class	Heat Loss (W)						Wt. kg (lb)
		ND (Fc = 2 kHz)			HD (Fc = 8 kHz)			
		Internal	External	Total	Internal	External	Total	
5A0011	600	88.0	56.1	144.1	49.5	110.9	160.4	4.1 (9.0)

■ Flange Type Panel Cutout Dimensions for External Heatsink Mounting

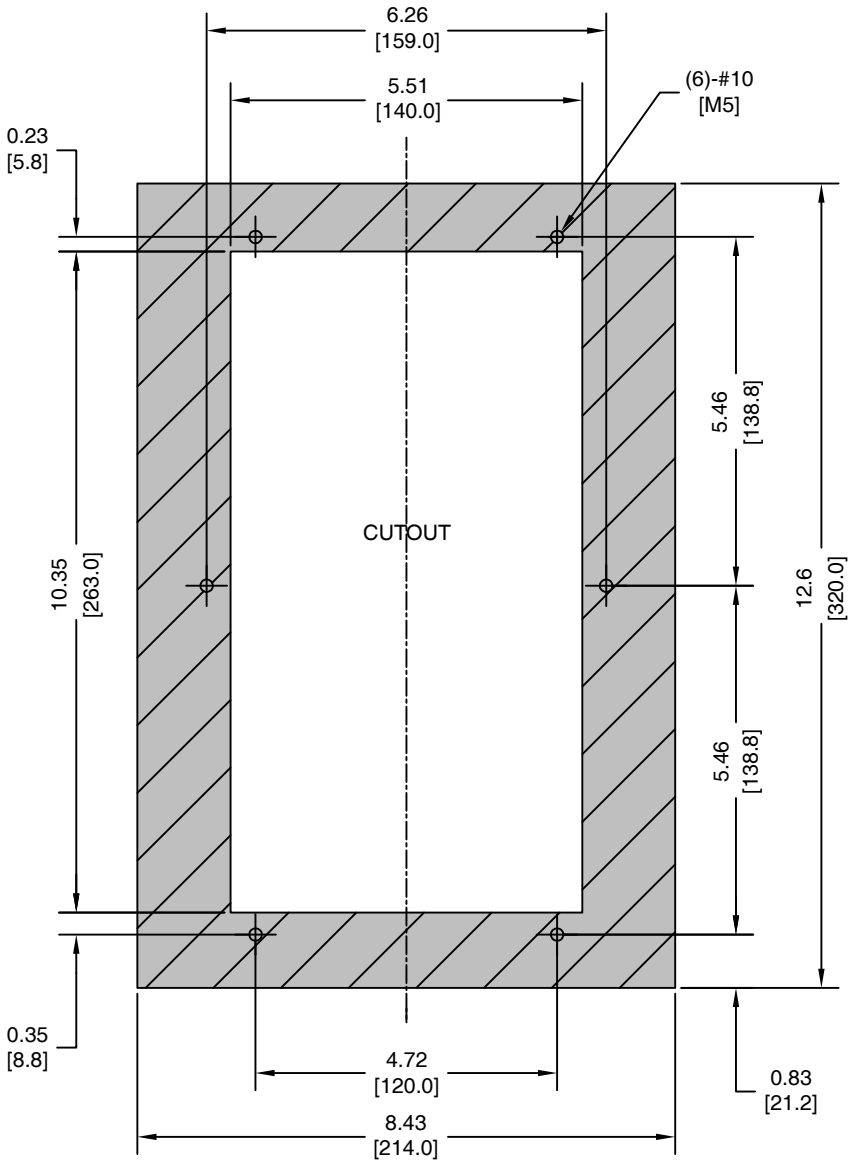

NOTES:
1. CUTOUT TOLERANCES:
   =/- 0.02 in. [0.5 mm]
2. EXPOSED HEATSINK
   RECOMMENDED CLEARANCE
   D=2.36 in. [60 mm] MINUS PANEL THICKNESS

Unit: in. [mm]

Figure 2.20 Models 2A0030 and 2A0040, 4A0018 and 4A0023, and 5A0011

◆ Flange Type Model 4A0031

■ Flange Type Exterior and Mounting Dimensions

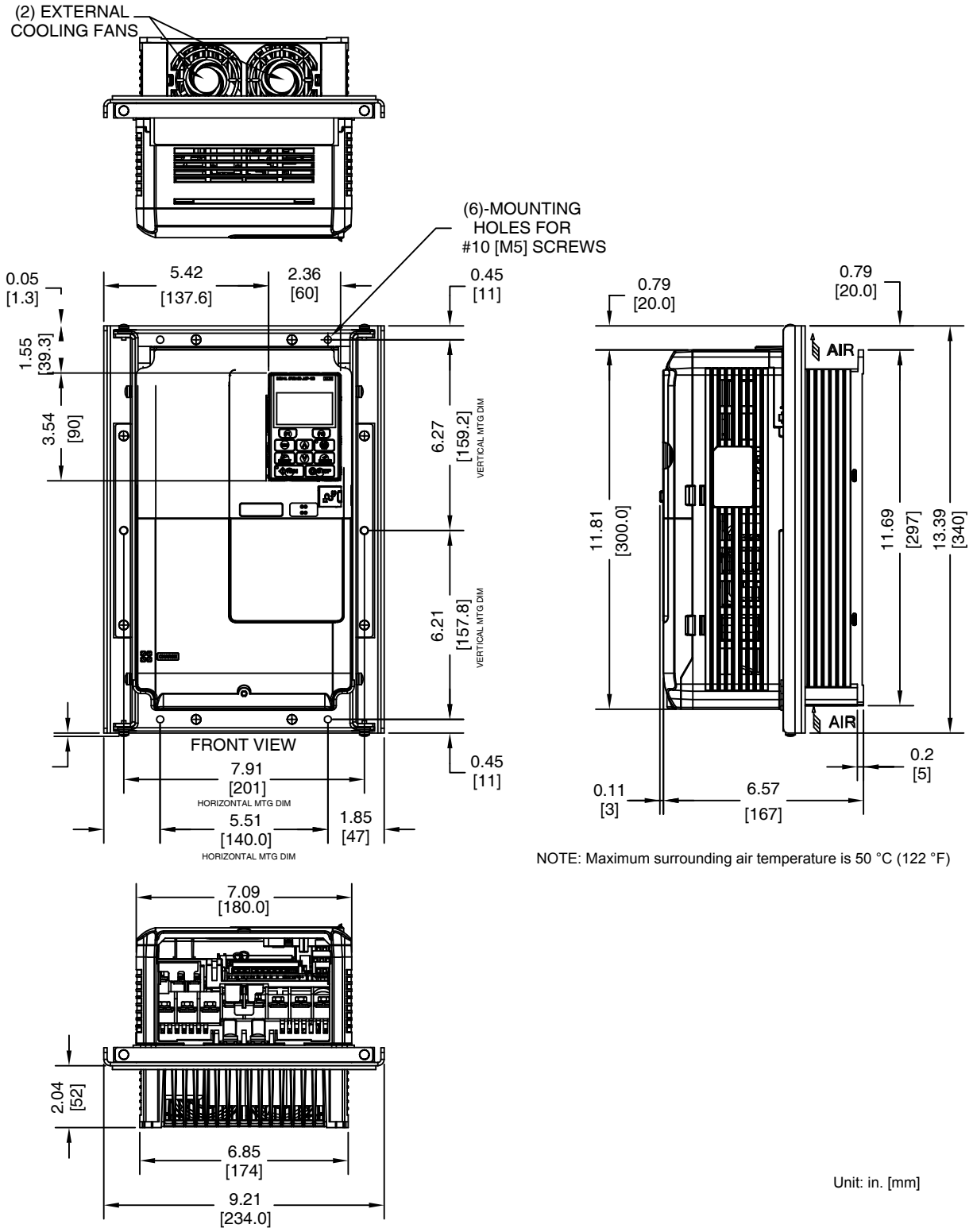

NOTE: Maximum surrounding air temperature is 50 °C (122 °F)

Unit: in. [mm]

Figure 2.21 Model 4A0031

■ Flange Type Heat Loss Data

Table 2.16 Model 4A0031

Drive Model	Voltage Class	Heat Loss (W)						Wt. kg (lb)
		ND (Fc = 2 kHz)			HD (Fc = 8 kHz)			
		Internal	External	Total	Internal	External	Total	
4A0031	400	160.5	294.6	455.1	115.1	208.0	323.1	5.7 (12.5)

■ Flange Type Panel Cutout Dimensions for External Heatsink Mounting

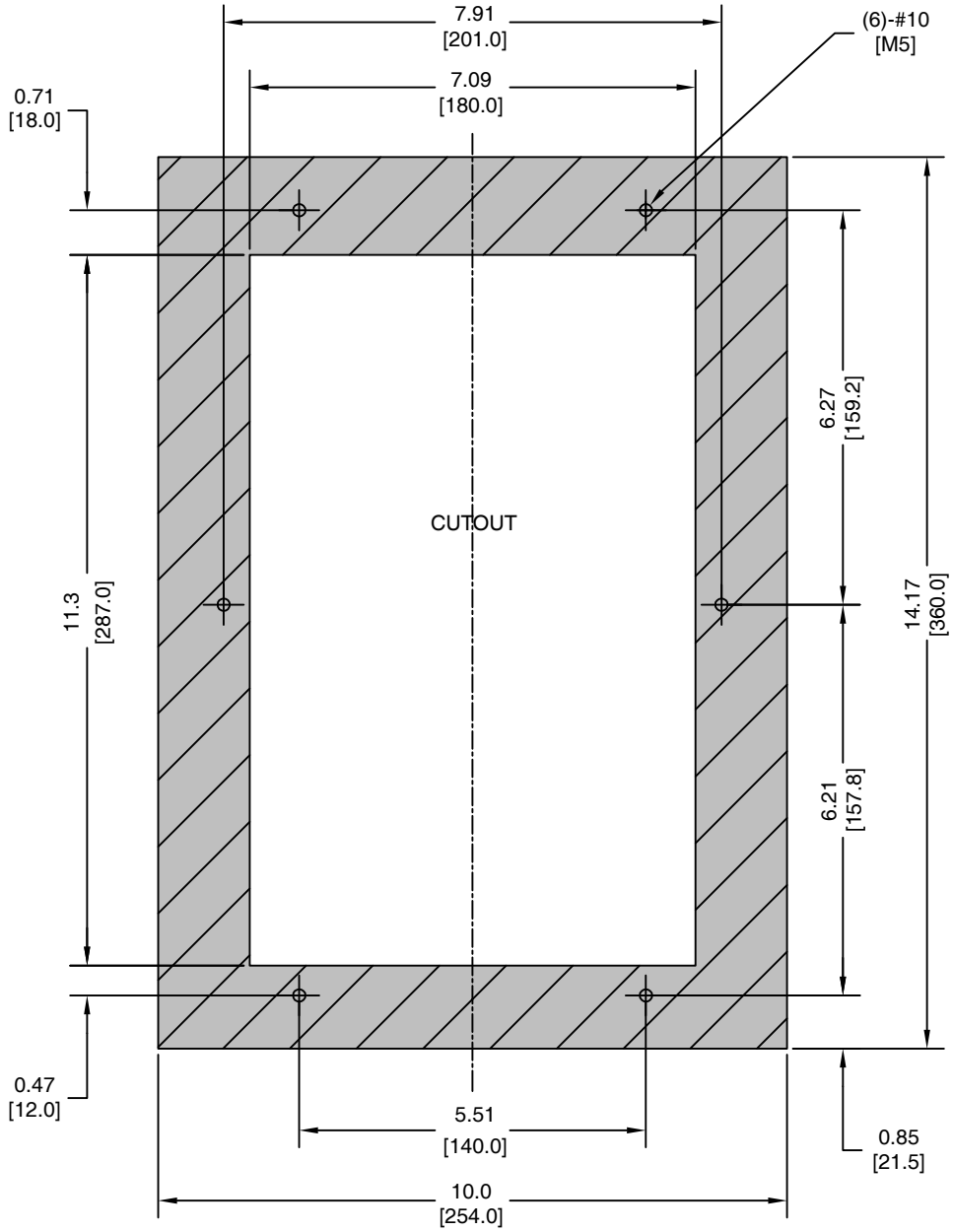

NOTES:
1. CUTOUT TOLERANCES:
   +/- 0.02 in. [0.5 mm]
2. EXPOSED HEATSINK
   RECOMMENDED CLEARANCE
   D=1.97 in. [50 mm] MINUS PANEL THICKNESS

Unit: in. [mm]

Figure 2.22 Model 4A0031

◆ Flange Type Models 2A0056, 4A0038, and 5A0017 and 5A0022

■ Flange Type Exterior and Mounting Dimensions

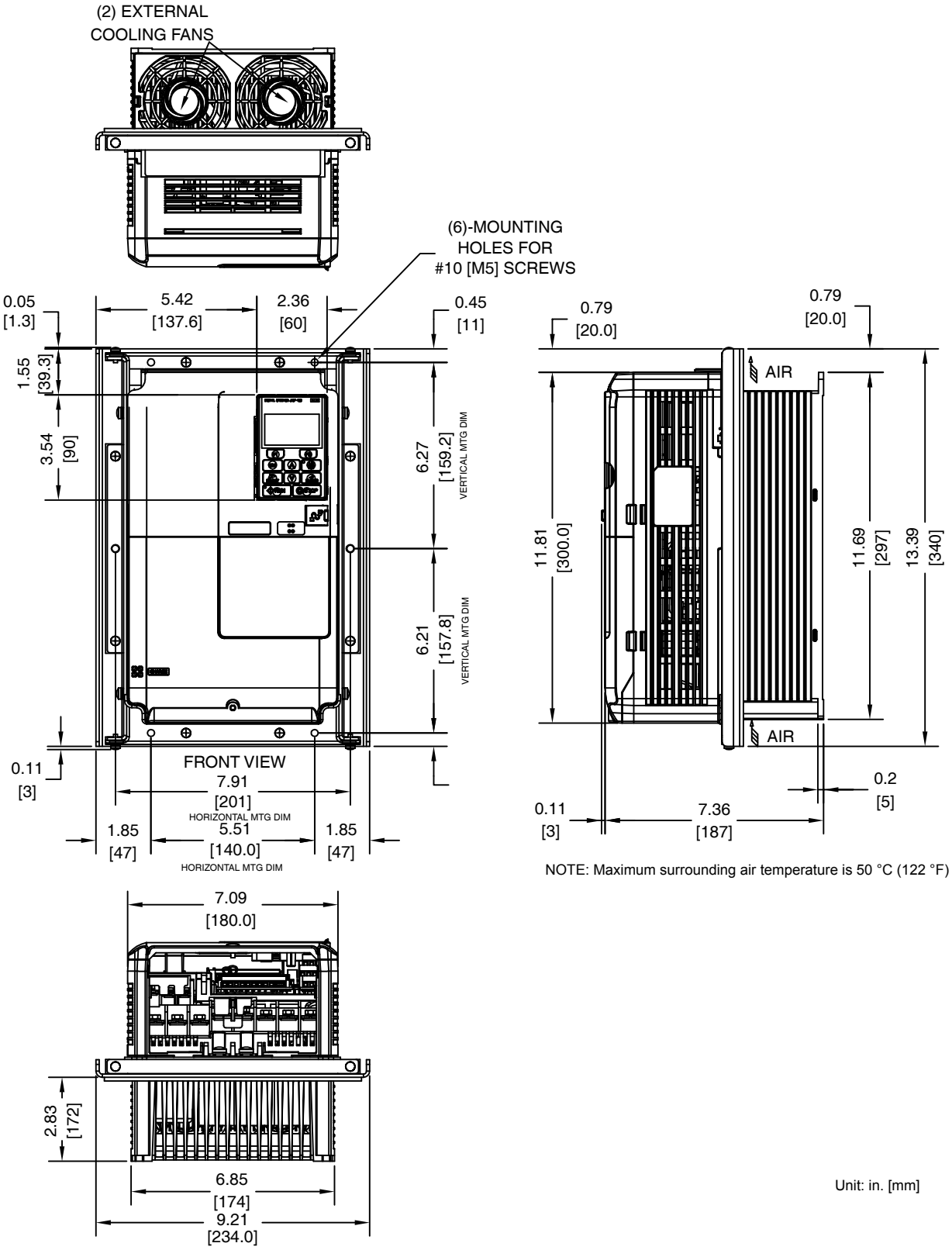

NOTE: Maximum surrounding air temperature is 50 °C (122 °F)

Figure 2.23 Models 2A0056, 4A0038, and 5A0017 and 5A0022

■ Flange Type Heat Loss Data

Table 2.17 Models 2A0056, 4A0038, and 5A0017 and 5A0022

Drive Model	Voltage Class	Heat Loss (W)						Wt. kg (lb)
		ND (Fc = 2 kHz)			HD (Fc = 8 kHz)			
		Internal	External	Total	Internal	External	Total	
2A0056	200	175.4	370.7	546.1	129.9	280.2	410.1	5.9 (13.0)

Drive Model	Voltage Class	Heat Loss (W)						Wt. kg (lb)
		ND (Fc = 2 kHz)			HD (Fc = 8 kHz)			
		Internal	External	Total	Internal	External	Total	
4A0038	400	181.6	339.6	521.2	140.8	262.6	403.4	6.0 (13.2)

Drive Model	Voltage Class	Heat Loss (W)						Wt. kg (lb)
		ND (Fc = 2 kHz)			HD (Fc = 8 kHz)			
		Internal	External	Total	Internal	External	Total	
5A0017	600	146.7	96.6	243.3	67.5	144.7	212.2	6.0 (13.2)
5A0022		178.3	99.4	277.7	81.1	203.8	284.9	6.0 (13.2)

■ Flange Type Panel Cutout Dimensions for External Heatsink Mounting

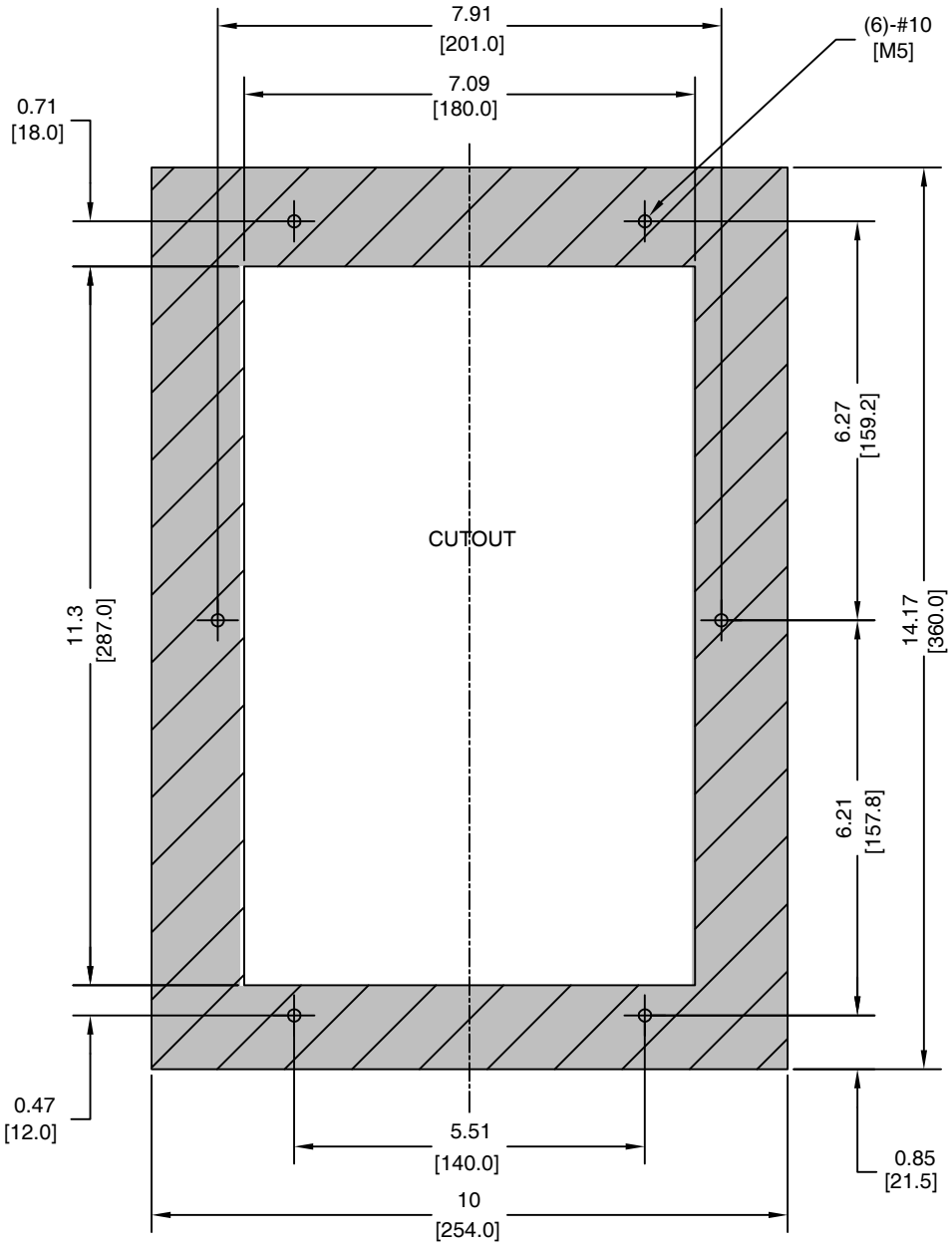

NOTES:
1. CUTOUT TOLERANCES:
   +/- 0.021 in. [0.5 mm]
2. EXPOSED HEATSINK
   RECOMMENED CLEARANCE
   D=3.5 in. [88.9 mm] MINUS PANEL THICKNESS

Unit: in. [mm]

Figure 2.24 Models 2A0056, 4A0038, and 5A0017 and 5A0022

◆ Flange Type Models 2A0069 and 2A0081, 4A0044, and 5A0027 and 5A0032

■ Flange Type Exterior and Mounting Dimensions

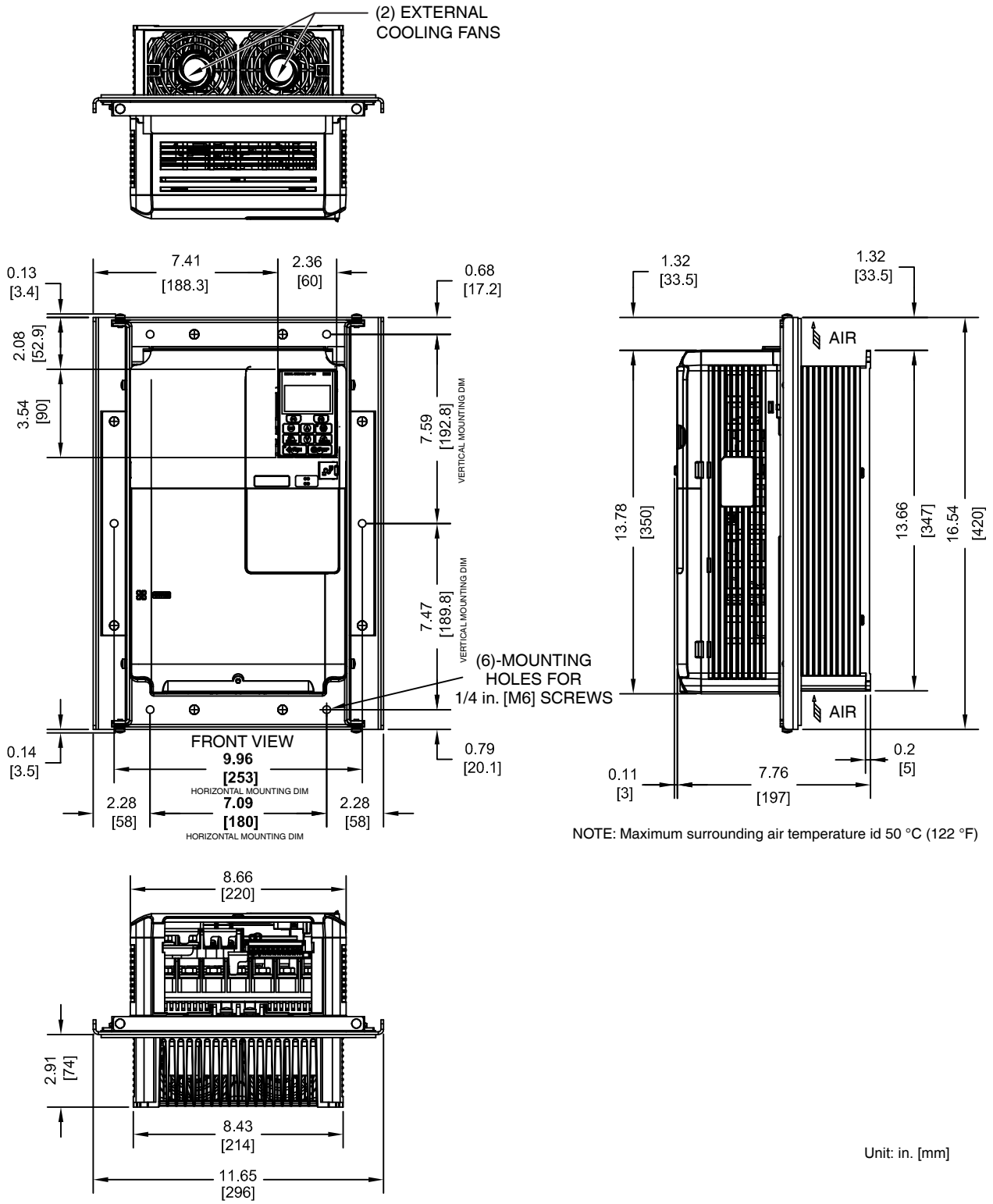

Figure 2.25 Models 2A0069 and 2A0081, 4A0044, and 5A0027 and 5A0032

■ Flange Type Heat Loss Data

Table 2.18 Models 2A0069 and 2A0081, 4A0044, and 5A0027 and 5A0032

Drive Model	Voltage Class	Heat Loss (W)						Wt. kg (lb)
		ND (Fc = 2 kHz)			HD (Fc = 8 kHz)			
		Internal	External	Total	Internal	External	Total	
2A0069	200	204.5	491.3	695.8	162.8	394.9	557.7	9.1 (20.0)
2A0081		257.4	527.4	784.8	220.9	459.8	680.7	10.0 (22.0)

Drive Model	Voltage Class	Heat Loss (W)						Wt. kg (lb)
		ND (Fc = 2 kHz)			HD (Fc = 8 kHz)			
		Internal	External	Total	Internal	External	Total	
4A0044	400	208.9	389.6	598.5	179.4	329.8	509.2	8.7 (19.1)

Drive Model	Voltage Class	Heat Loss (W)						Wt. kg (lb)
		ND (Fc = 2 kHz)			HD (Fc = 8 kHz)			
		Internal	External	Total	Internal	External	Total	
5A0027	600	227.2	132.1	359.3	113.9	267.2	381.1	8.7 (19.1)
5A0032		279.9	141.6	421.5	132.2	332.9	465.1	8.7 (19.1)

■ Flange Type Panel Cutout Dimensions for External Heatsink Mounting

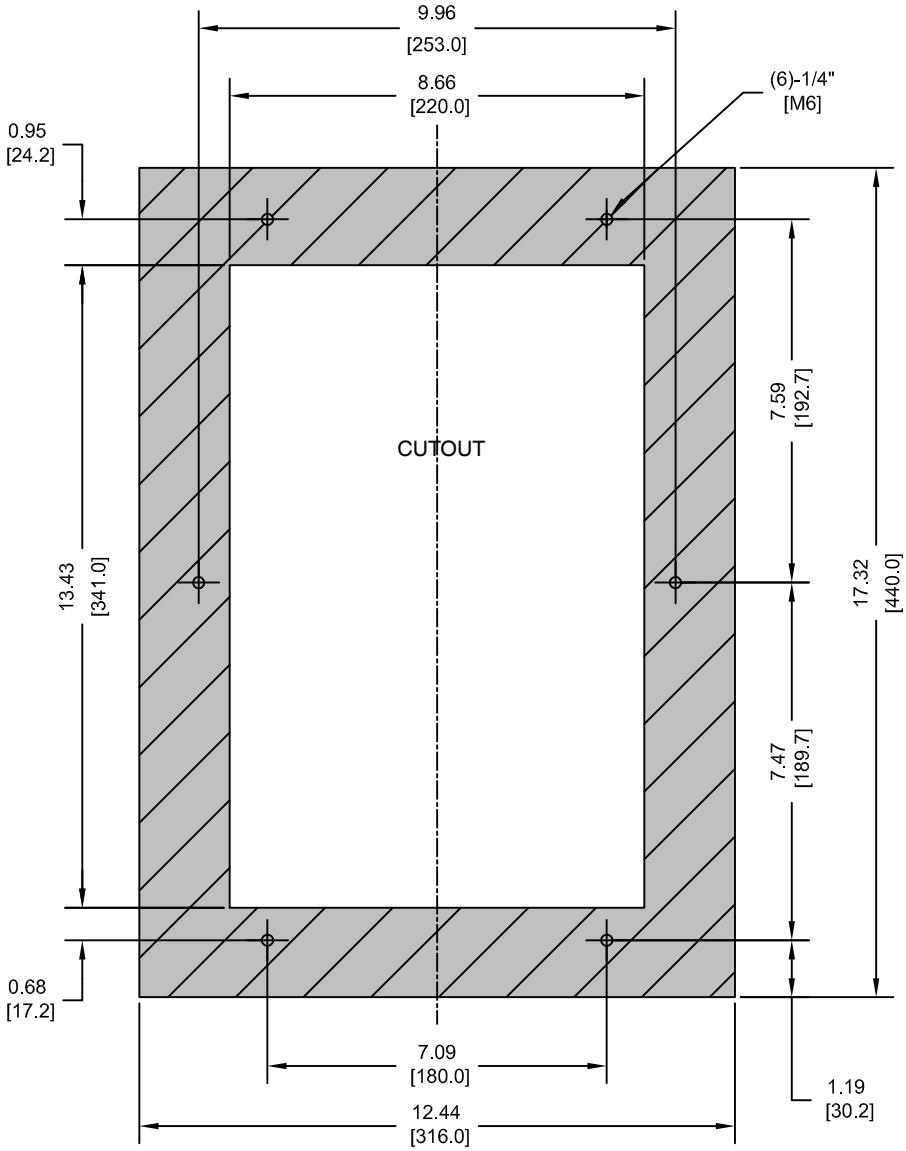

NOTES:
1. CUTOUT TOLERANCES:
   +/- 0.02 in. [0.5 mm]
2. EXPOSED HEATSINK
   RECOMMENDED CLEARANCE
   D=3.35 in. [85 mm] MINUS PANEL THICKNESS

Unit: in. [mm]

Figure 2.26 Models 2A0069 and 2A0081, 4A0044, and 5A0027 and 5A0032

◆ Flange Type Models 2A0110 and 4A0058

■ Flange Type Exterior and Mounting Dimensions

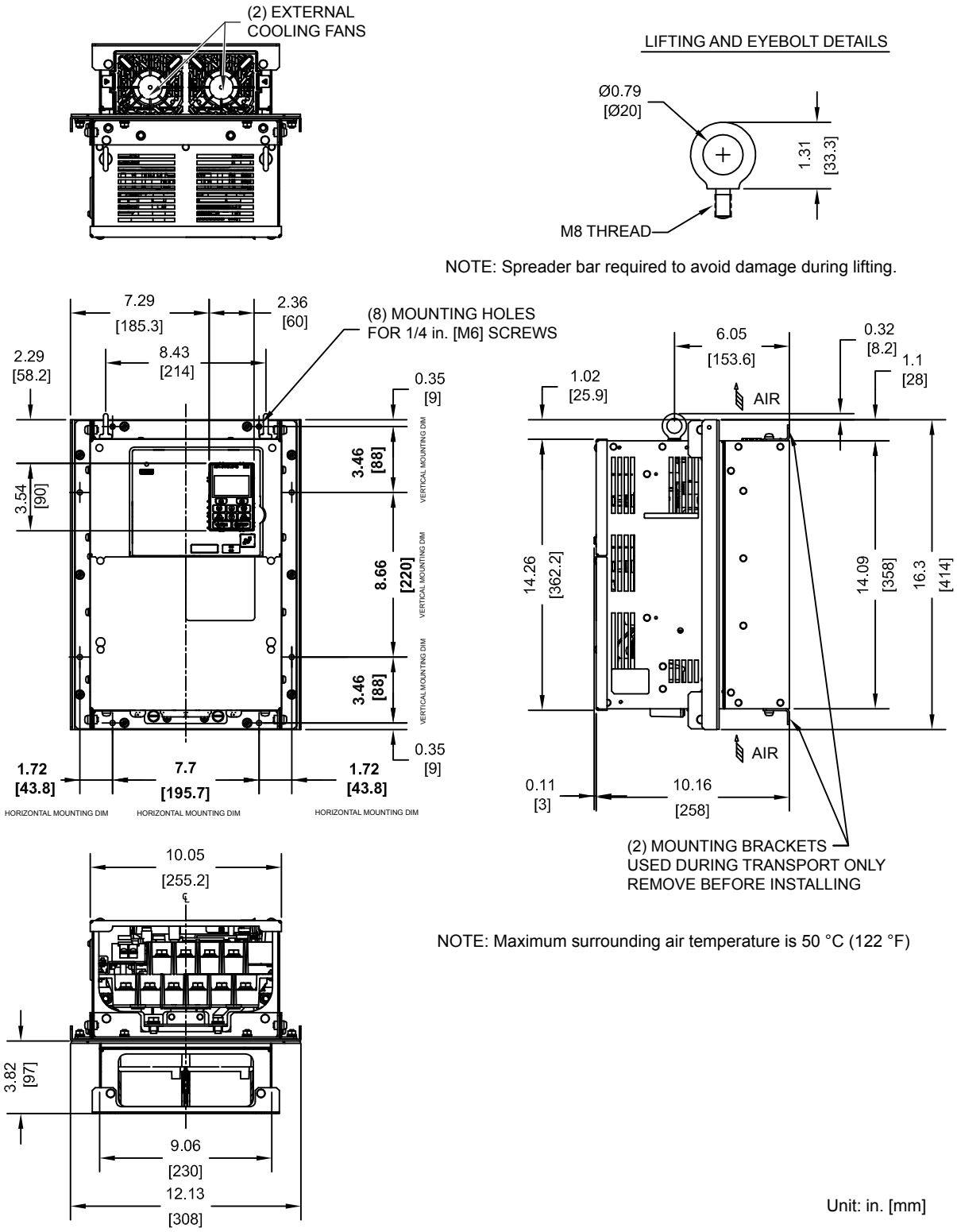

Figure 2.27 Models 2A0110 and 4A0058

■ Flange Type Heat Loss Data

Table 2.19 Models 2A0110 and 4A0058

Drive Model	Voltage Class	Heat Loss (W)						Wt. kg (lb)
		ND (Fc = 2 kHz)			HD (Fc = 8 kHz)			
		Internal	External	Total	Internal	External	Total	
2A0110	200	286	719	1005	211	510	721	23 (50.6)

Drive Model	Voltage Class	Input Type	Heat Loss (W)						Wt. kg (lb)
			ND (Fc = 2 kHz)			HD (Fc = 8 kHz)			
			Internal	External	Total	Internal	External	Total	
4A0058	400	6-Pulse	215	471	686	170	349	519	23 (50.6)

■ Flange Type Panel Cutout Dimensions for External Heatsink Mounting

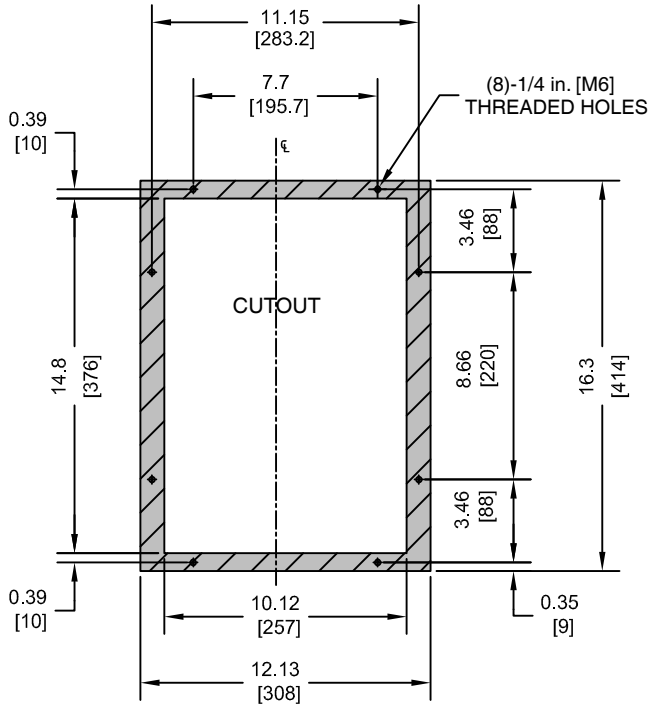

NOTES:
1. CUTOUT TOLERANCES:
   +/- 0.02 in. [0.5 mm]
2. EXPOSED HEATSINK DEPTH
   D=3.82 in. [97 mm] MINUS PANEL THICKNESS
3. MINIMUM RECOMMENDED PANEL
   THICKNESS: 12 GA

Unit: in. [mm]

Figure 2.28 Models 2A0110 and 4A0058

◆ Flange Type Models 2A0138, 4A0072, and 5A0041 and 5A0052

■ Flange Type Exterior and Mounting Dimensions

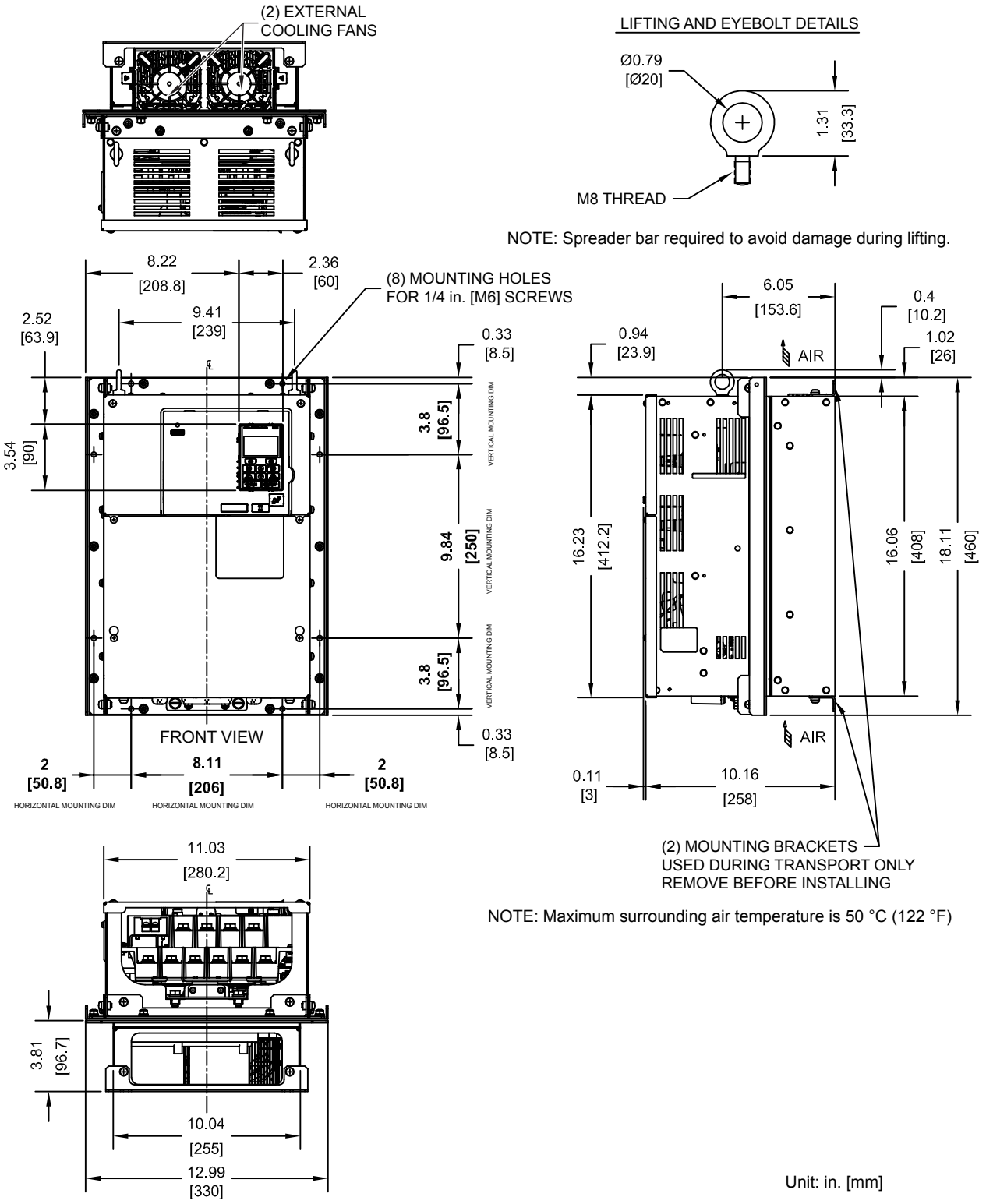

Figure 2.29 Models 2A0138, 4A0072, and 5A0041 and 5A0052

■ Flange Type Heat Loss Data

Table 2.20 Models 2A0138, 4A0072, and 5A0041 and 5A0052

Drive Model	Voltage Class	Heat Loss (W)						Wt. kg (lb)
		ND (Fc = 2 kHz)			HD (Fc = 8 kHz)			
		Internal	External	Total	Internal	External	Total	
2A0138	200	312	842	1154	250	662	912	28 (61.6)

Drive Model	Voltage Class	Input Type	Heat Loss (W)						Wt. kg (lb)
			ND (Fc = 2 kHz)			HD (Fc = 8 kHz)			
			Internal	External	Total	Internal	External	Total	
4A0072	400	6-Pulse	265	605	870	217	484	701	27 (59.4)

Drive Model	Voltage Class	Heat Loss (W)						Wt. kg (lb)
		ND (Fc = 2 kHz)			HD (Fc = 8 kHz)			
		Internal	External	Total	Internal	External	Total	
5A0041	600	136	331	467	128	406	534	27 (59.4)
5A0052		166	428	594	161	527	688	27 (59.4)

■ Flange Type Panel Cutout Dimensions for External Heatsink Mounting

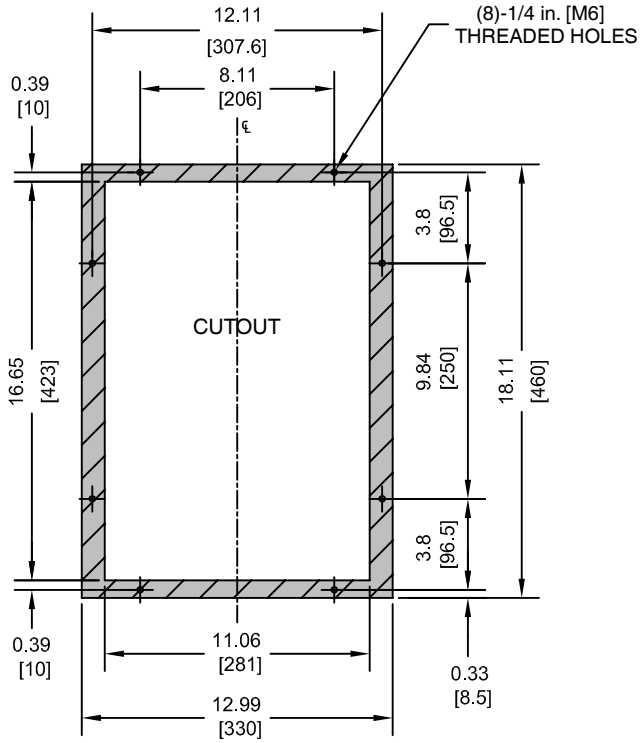

NOTES:
1. CUTOUT TOLERANCES:
   +/- 0.02 in. [0.5 mm]
2. EXPOSED HEATSINK DEPTH
   D=3.81 in. [97 mm] MINUS PANEL THICKNESS
3. MINIMUM RECOMMENDED PANEL
   THICKNESS: 12 GA

Unit: in. [mm]

Figure 2.30 Models 2A0138, 4A0072, and 5A0041 and 5A0052

◆ Flange Type Models 4A0088 and 4A0103

■ Flange Type Exterior and Mounting Dimensions

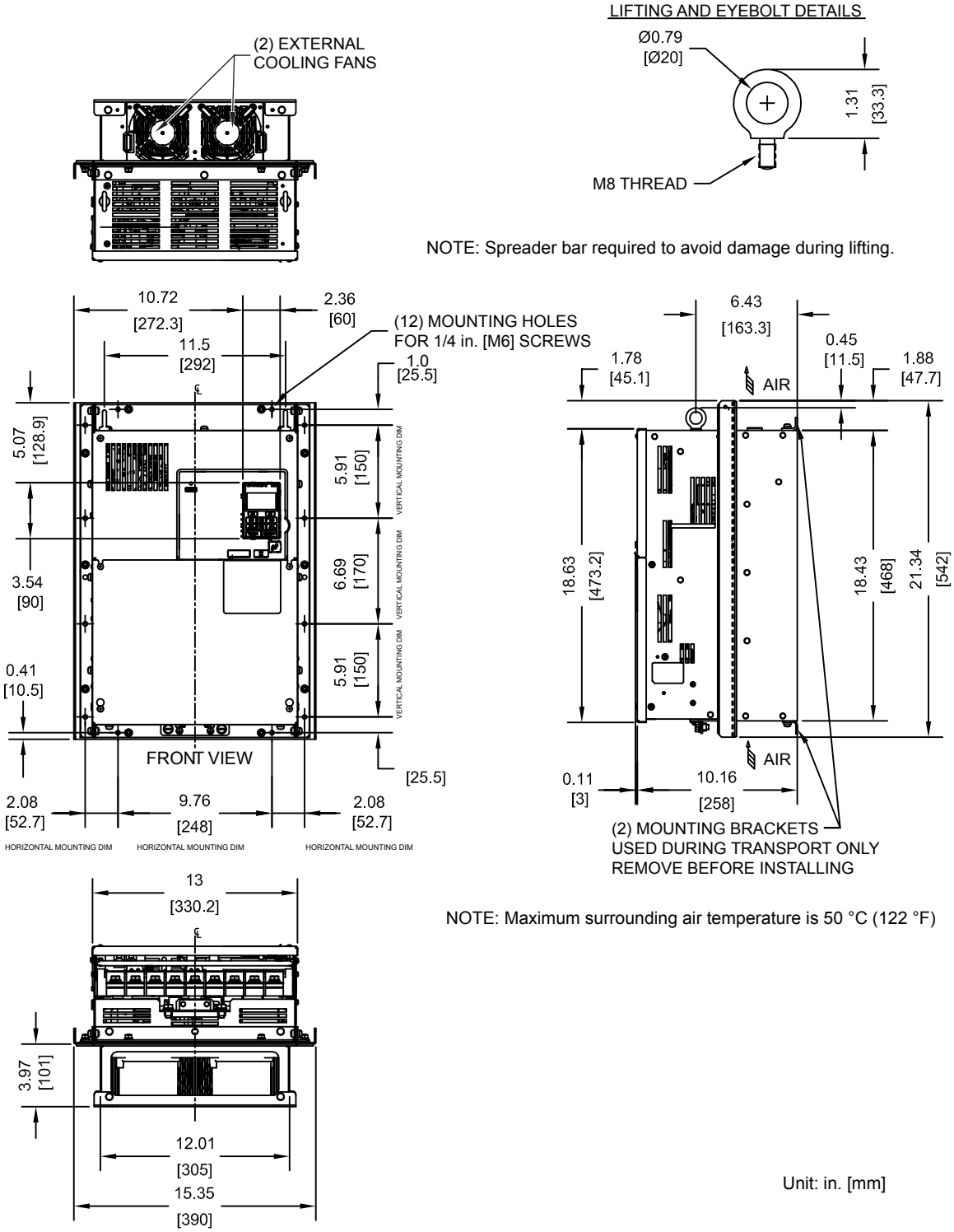

Figure 2.31 Models 4A0088 and 4A0103

■ Flange Type Heat Loss Data

Table 2.21 Models 4A0088 and 4A0103

Drive Model	Voltage Class	Input Type	Heat Loss (W)						Wt. kg (lb)
			ND (Fc = 2 kHz)			HD (Fc = 8 kHz)			
			Internal	External	Total	Internal	External	Total	
4A0088	400	6-Pulse	308	684	992	254	563	817	39 (85.8)
4A0103			357	848	1205	299	723	1022	39 (85.8)

■ Flange Type Panel Cutout Dimensions for External Heatsink Mounting

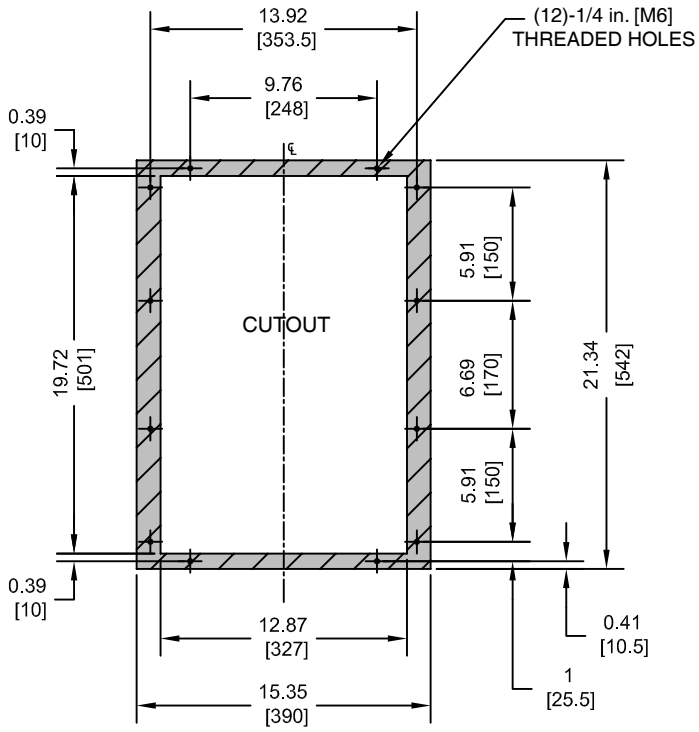

NOTES:
1. CUTOUT TOLERANCES:
   +/- 0.02 in. [0.5 mm]
2. EXPOSED HEATSINK DEPTH
   D=3.97 in. [101 mm] MINUS PANEL THICKNESS
3. MINIMUM RECOMMENDED PANEL
   THICKNESS: 12 GA

Unit: in. [mm]

Figure 2.32 Models 4A0088 and 4A0103

◆ Flange Type Models 2A0169 and 2A0211, 4A0139 and 4A0165, and 5A0062 to 5A0099

■ Flange Type Exterior and Mounting Dimensions

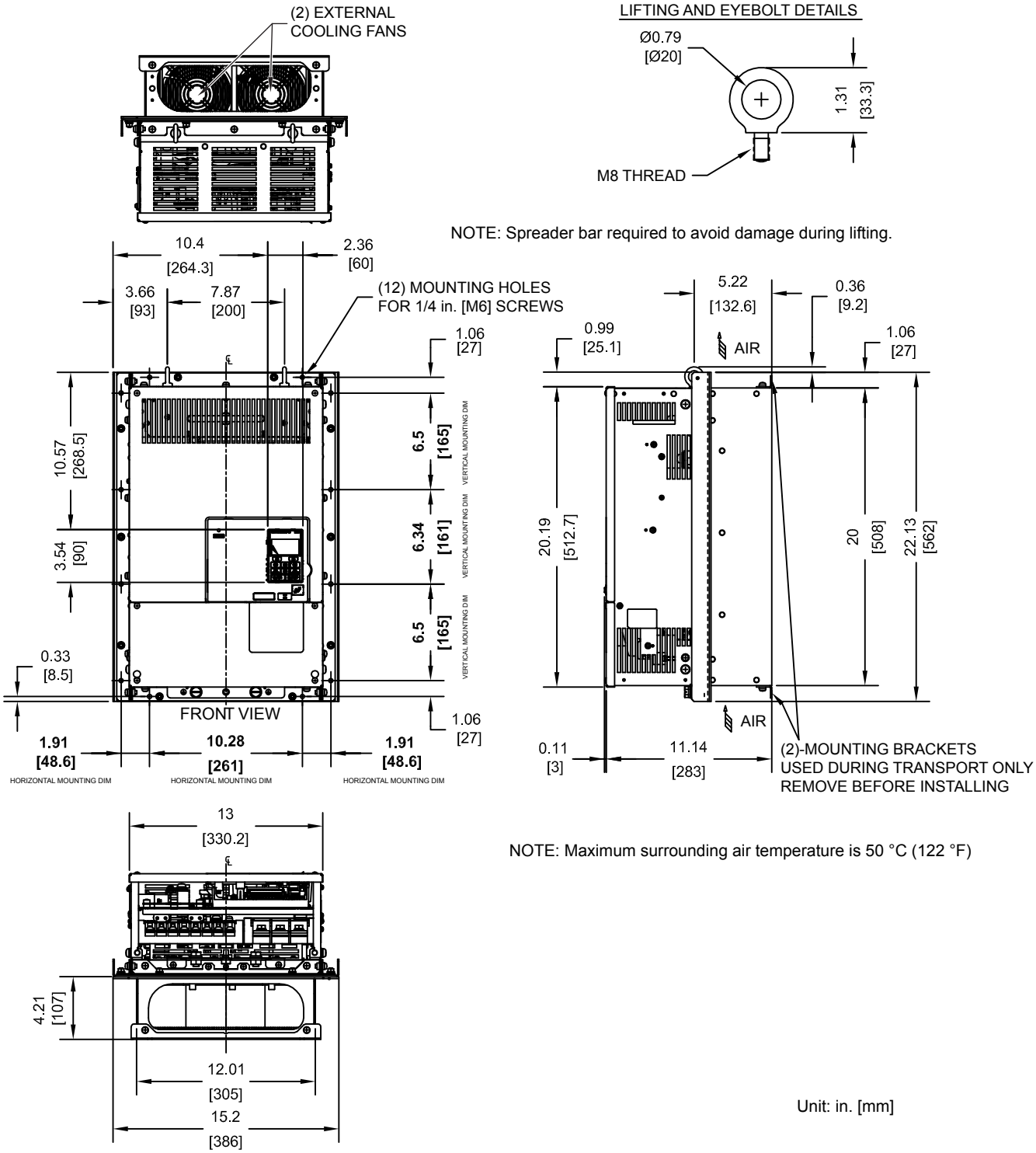

Figure 2.33 Models 2A0169 and 2A0211, 4A0139 and 4A0165, and 5A0062 to 5A0099

■ Flange Type Heat Loss Data

Table 2.22 Models 2A0169 and 2A0211, 4A0139 and 4A0165, and 5A0062 to 5A0099

Drive Model	Voltage Class	Heat Loss (W)						Wt. kg (lb)
		ND (Fc = 2 kHz)			HD (Fc = <1>)			
		Internal	External	Total	Internal	External	Total	
2A0169	200	380	1014	1394	306	816	1122	41 (90.2)
2A0211		473	1218	1691	378	976	1354	42 (92.4)

<1> Carrier frequency is set to 8 kHz in model 2A0169 and set to 5 kHz in model 2A0211.

Drive Model	Voltage Class	Input Type	Heat Loss (W)						Wt. kg (lb)
			ND (Fc = 2 kHz)			HD (Fc = <1>)			
			Internal	External	Total	Internal	External	Total	
4A0139	400	6-Pulse	534	1215	1749	416	908	1324	45 (99.0)
4A0165			668	1557	2225	580	1340	1920	46 (101.2)

<1> Carrier frequency is set to 8 kHz in model 4A0139 and set to 5 kHz in model 4A0165.

Drive Model	Voltage Class	Heat Loss (W)						Wt. kg (lb)
		ND (Fc = 2 kHz)			HD (Fc = <1>)			
		Internal	External	Total	Internal	External	Total	
5A0062	600	279	791	1070	335	1272	1607	45 (99.0)
5A0077		329	959	1288	379	1457	1836	45 (99.0)
5A0099		412	1253	1665	352	1267	1619	45 (99.0)

<1> Carrier frequency is set to 8 kHz in models 5A0062 and 5A0077 and set to 5 kHz in model 5A0099.

■ Flange Type Panel Cutout Dimensions for External Heatsink Mounting

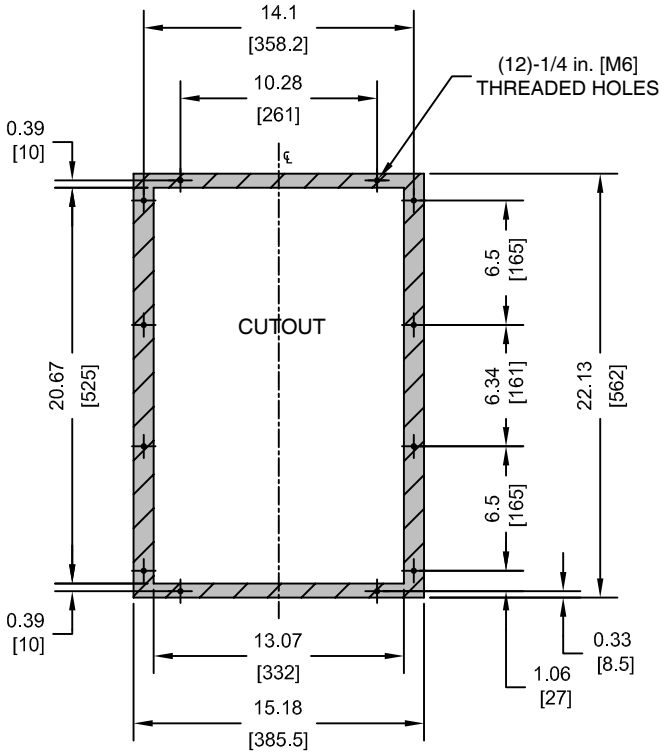

NOTES:
1. CUTOUT TOLERANCES:
   +/- 0.02 in. [0.5 mm]
2. EXPOSED HEATSINK DEPTH
   D=4.21 in. [107 mm] MINUS PANEL THICKNESS
3. MINIMUM RECOMMENDED PANEL
   THICKNESS: 12 GA

Unit: in. [mm]

Figure 2.34 Models 2A0169 and 2A0211, 4A0139 and 4A0165, and 5A0062 to 5A0099

◆ Flange Type Models 2A0250 and 2A0312, 4A0208, and 5A0125 and 5A0145

■ Flange Type Exterior and Mounting Dimensions

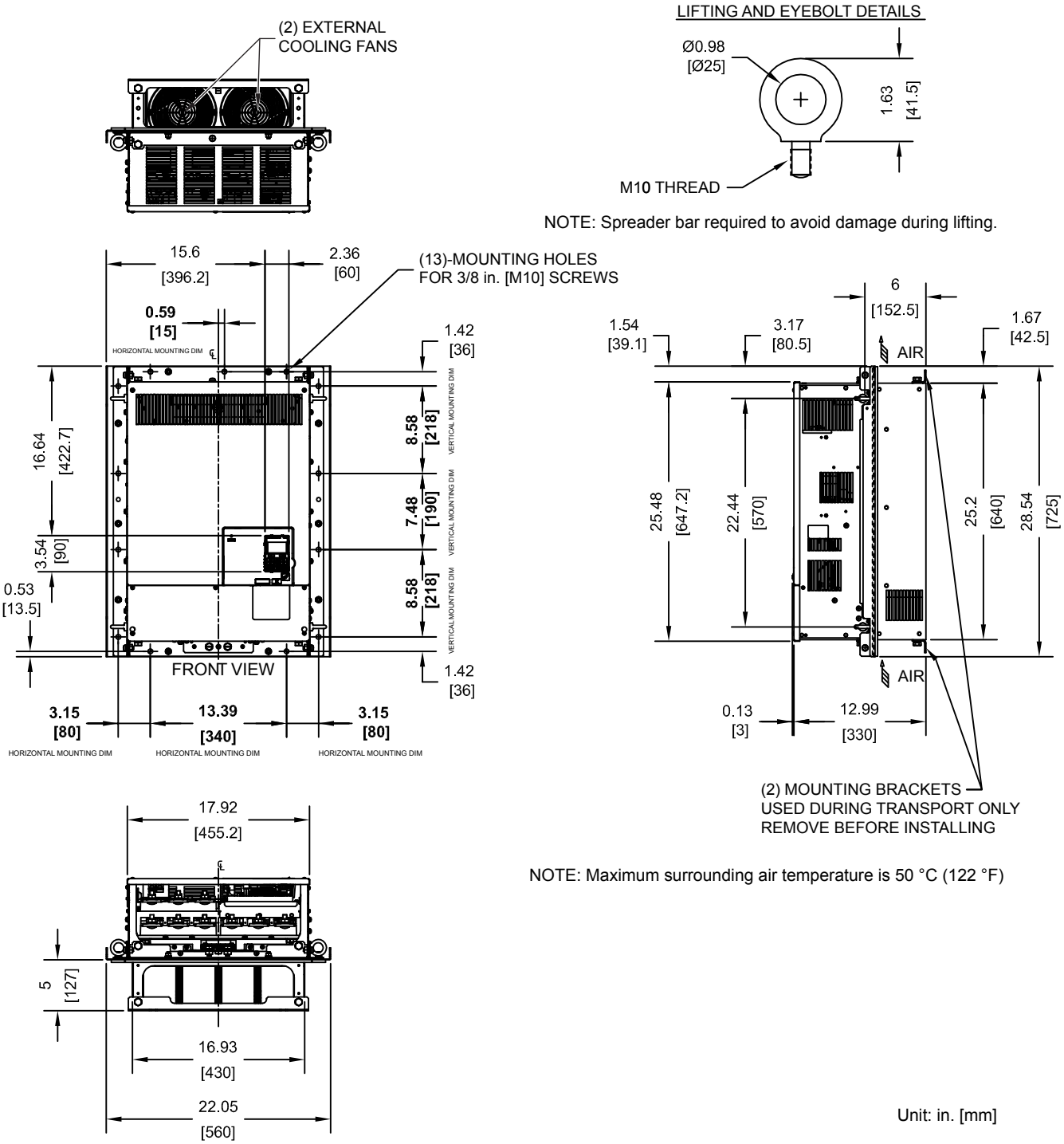

Figure 2.35 Models 2A0250 and 2A0312, 4A0208, and 5A0125 and 5A0145

■ Flange Type Heat Loss Data

Table 2.23 Models 2A0250 and 2A0312, 4A0208, and 5A0125 and 5A0145

Drive Model	Voltage Class	Heat Loss (W)						Wt. kg (lb)
		ND (Fc = 2 kHz)			HD (Fc = 5 kHz)			
		Internal	External	Total	Internal	External	Total	
2A0250	200	594	1764	2358	466	1514	1980	83 (183)
2A0312		665	2020	2685	588	1936	2524	88 (194)

Drive Model	Voltage Class	Input Type	Heat Loss (W)						Wt. kg (lb)
			ND (Fc = 2 kHz)			HD (Fc = 5 kHz)			
			Internal	External	Total	Internal	External	Total	
4A0208	400	6-Pulse	607	1800	2407	541	1771	2312	87 (191)

Drive Model	Voltage Class	Heat Loss (W)						Wt. kg (lb)
		ND (Fc = 2 kHz)			HD (Fc = 2 kHz)			
		Internal	External	Total	Internal	External	Total	
5A0125	600	537	1641	2178	422	1328	1750	87 (191)
5A0145		603	1860	2463	508	1638	2146	87 (191)

■ Flange Type Panel Cutout Dimensions for External Heatsink Mounting

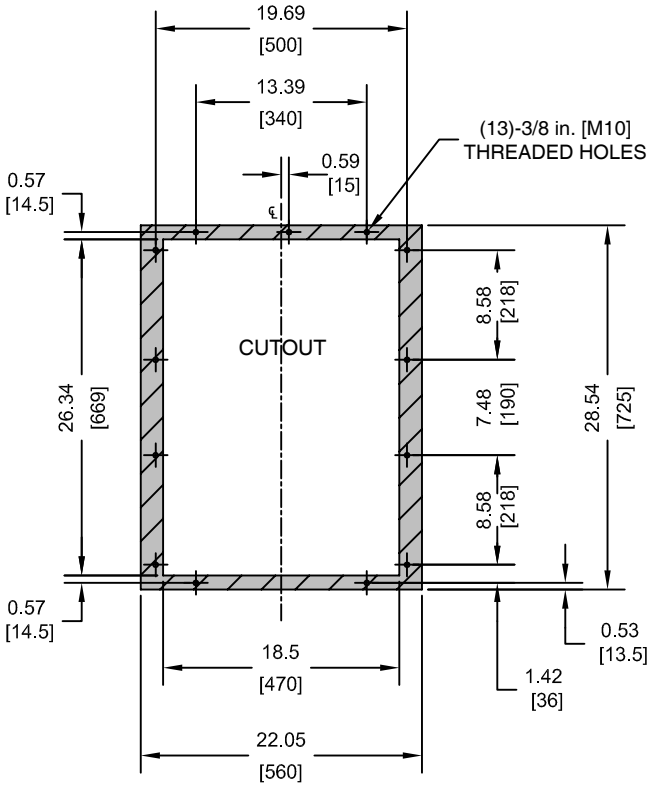

NOTES:
1. CUTOUT TOLERANCES:
   +/- 0.02 in. [0.5 mm]
2. EXPOSED HEATSINK DEPTH
   D=5.00 in. [127 mm] MINUS PANEL THICKNESS
3. MINIMUM RECOMMENDED PANEL
   THICKNESS: 10 GA

Unit: in. [mm]

Figure 2.36 Models 2A0250 and 2A0312, 4A0208, and 5A0125 and 5A0145

◆ Flange Type Models 2A0360 and 2A0415, 4A0250 to 4A0362, and 5A0192 and 5A0242

■ Flange Type Exterior and Mounting Dimensions

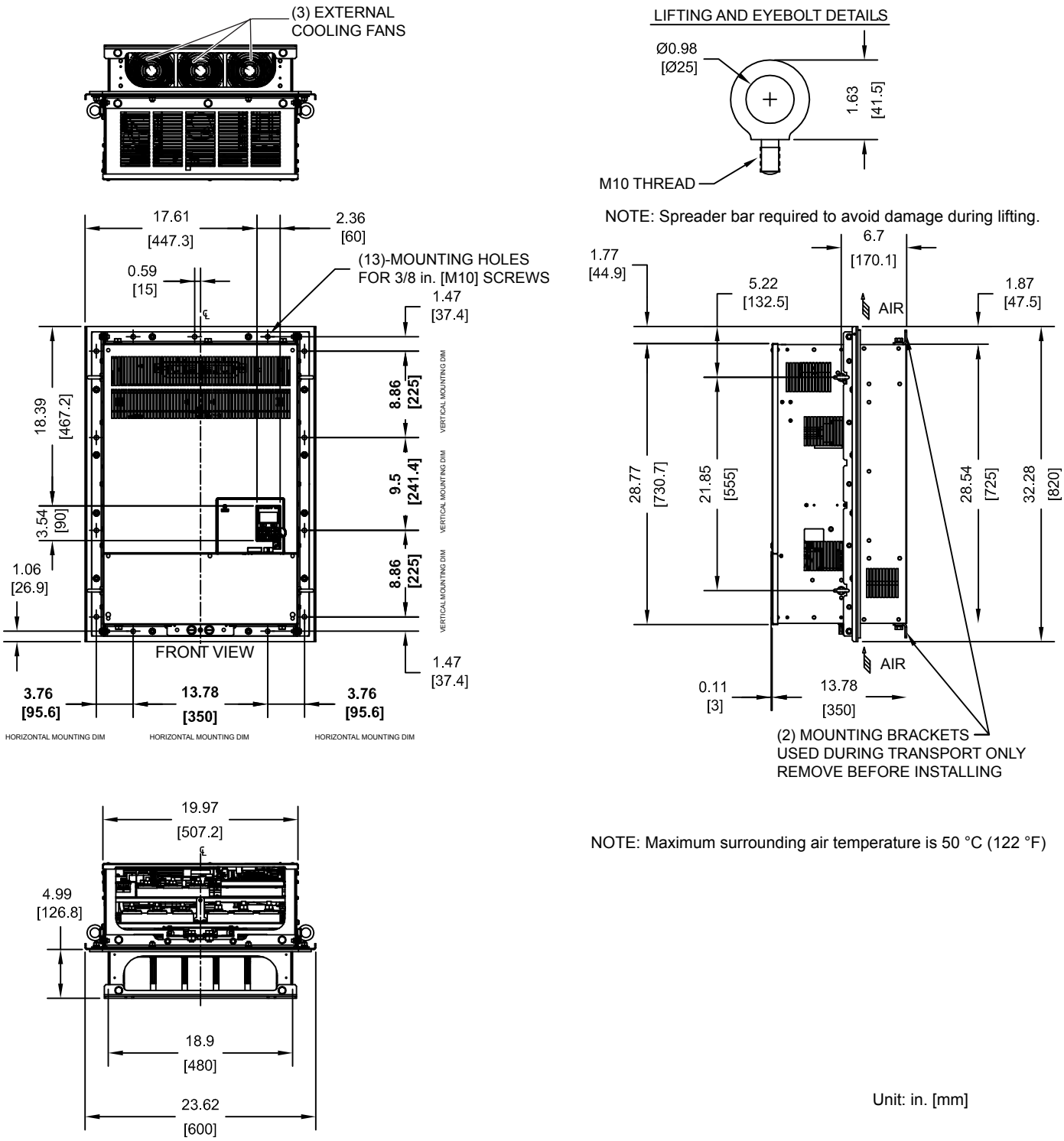

Figure 2.37 Models 2A0360 and 2A0415, 4A0250 to 4A0362, and 5A0192 and 5A0242

■ Flange Type Heat Loss Data

Table 2.24 Models 2A0360 and 2A0415, 4A0250 to 4A0362, and 5A0192 and 5A0242

Drive Model	Voltage Class	Heat Loss (W)						Wt. kg (lb)
		ND (Fc = 2 kHz)			HD (Fc = <1>)			
		Internal	External	Total	Internal	External	Total	
2A0360	200	894	2698	3592	783	2564	3347	108 (238)
2A0415		954	2672	3626	954	2672	3626	–

<1> Carrier frequency is set to 5 kHz in model 2A0360 and set to 2 kHz in model 2A0415.

Drive Model	Voltage Class	Input Type	Heat Loss (W)						Wt. kg (lb)
			ND (Fc = 2 kHz)			HD (Fc = <1>)			
			Internal	External	Total	Internal	External	Total	
4A0250	400	6-Pulse	803	2379	3182	715	2360	3075	106 (233)
4A0296			905	2448	3353	787	2391	3178	112 (246)
4A0362			1130	3168	4298	985	3075	4060	117 (257)

<1> Carrier frequency is set to 5 kHz in models 4A0250 and 4A0296, and set to 2 kHz in model 4A0362.

Drive Model	Voltage Class	Heat Loss (W)						Wt. kg (lb)
		ND (Fc = 2 kHz)			HD (Fc = 2 kHz)			
		Internal	External	Total	Internal	External	Total	
5A0192	600	769	2420	3189	648	2114	2762	117 (257)
5A0242		1131	3100	4231	896	2526	3422	117 (257)

■ Flange Type Panel Cutout Dimensions for External Heatsink Mounting

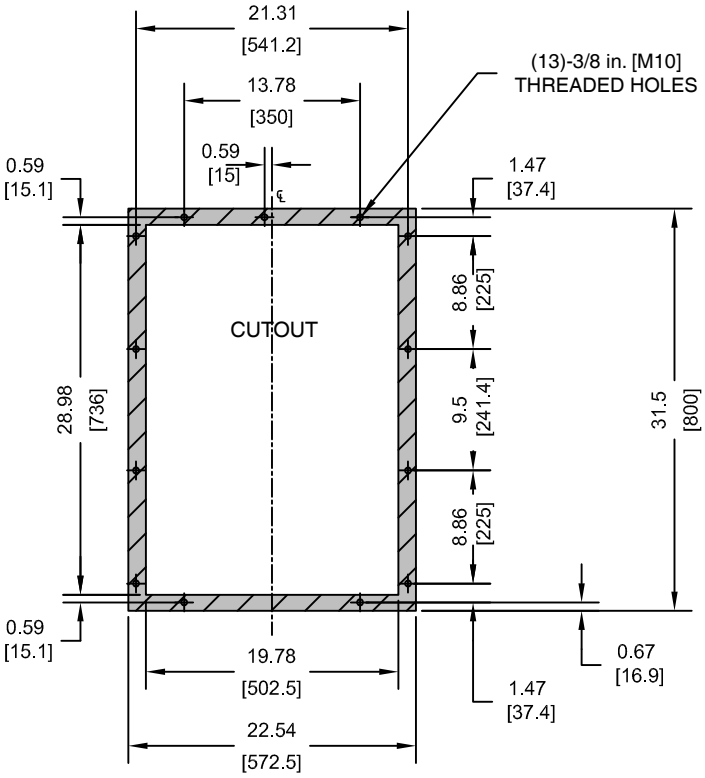

NOTES:
1. CUTOUT TOLERANCES:
   +/- 0.02 in. [0.5 mm]
2. EXPOSED HEATSINK DEPTH
   D=4.99 in. [127 mm] MINUS PANEL THICKNESS
3. MINIMUM RECOMMENDED PANEL
   THICKNESS: 10 GA

Unit: in. [mm]

Figure 2.38 Models 2A0360 and 2A0415, 4A0250 to 4A0362, and 5A0192 and 5A0242

◆ Flange Type Model 4A0414

■ Flange Type Exterior and Mounting Dimensions

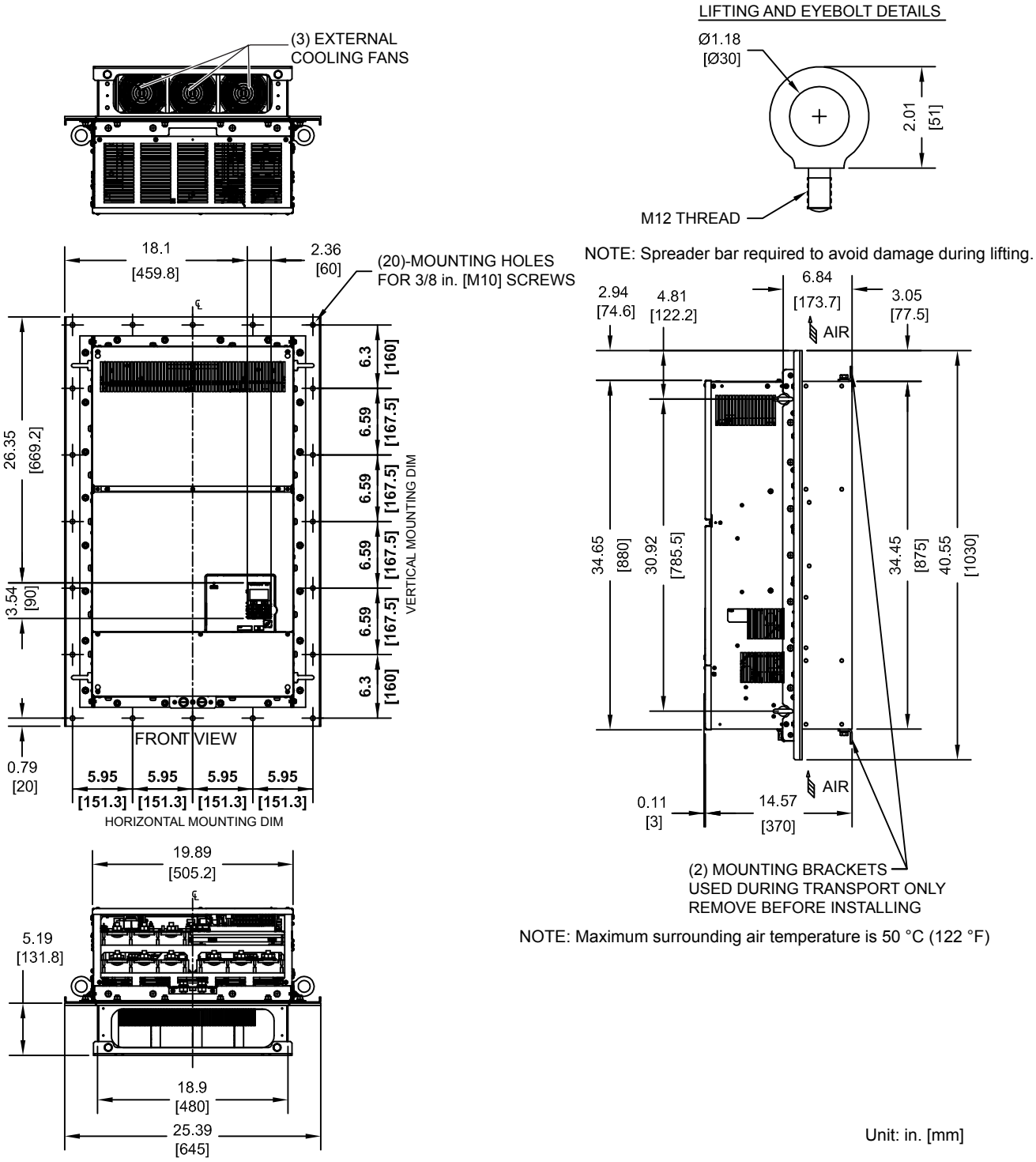

Figure 2.39 Model 4A0414

■ Flange Type Heat Loss Data

Table 2.25 Model 4A0414

Drive Model	Voltage Class	Heat Loss (W)						Wt. kg (lb)
		ND (Fc = 2 kHz)			HD (Fc = 8 kHz)			
		Internal	External	Total	Internal	External	Total	
4A0414	400	1295	3443	4738	1164	3578	4742	138 (304)

■ Flange Type Panel Cutout Dimensions for External Heatsink Mounting

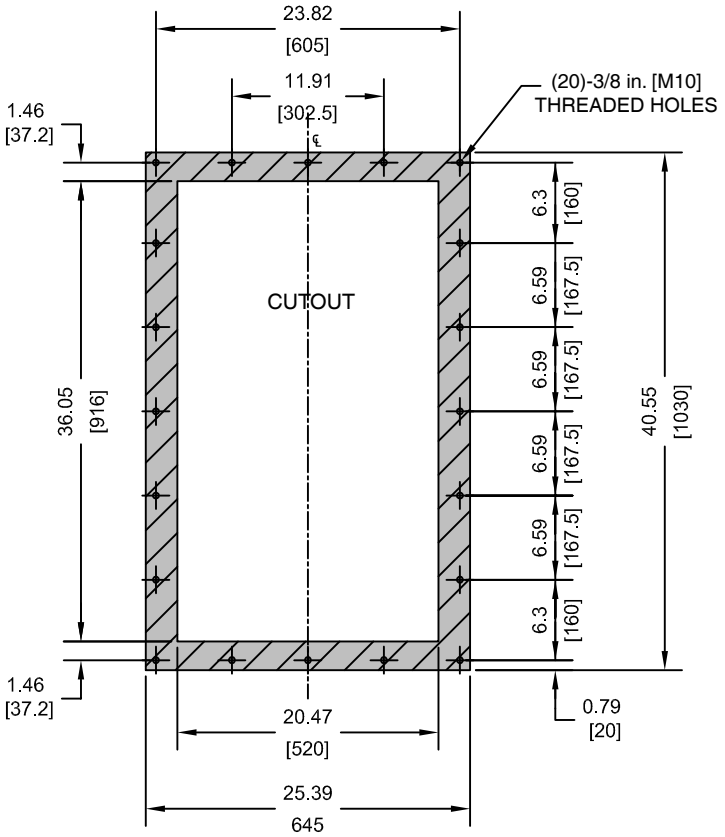

NOTES:
1. CUTOUT TOLERANCES:
   +/- 0.02 in. [0.5 mm]
2. EXPOSED HEATSINK DEPTH
   D=5.19 in. [132 mm] MINUS PANEL THICKNESS
3. MINIMUM RECOMMENDED PANEL
   THICKNESS: 10 GA

Unit: in. [mm]

Figure 2.40 Model 4A0414

◆ Flange Type Models 4A0515 and 4A0675

■ Flange Type Exterior and Mounting Dimensions

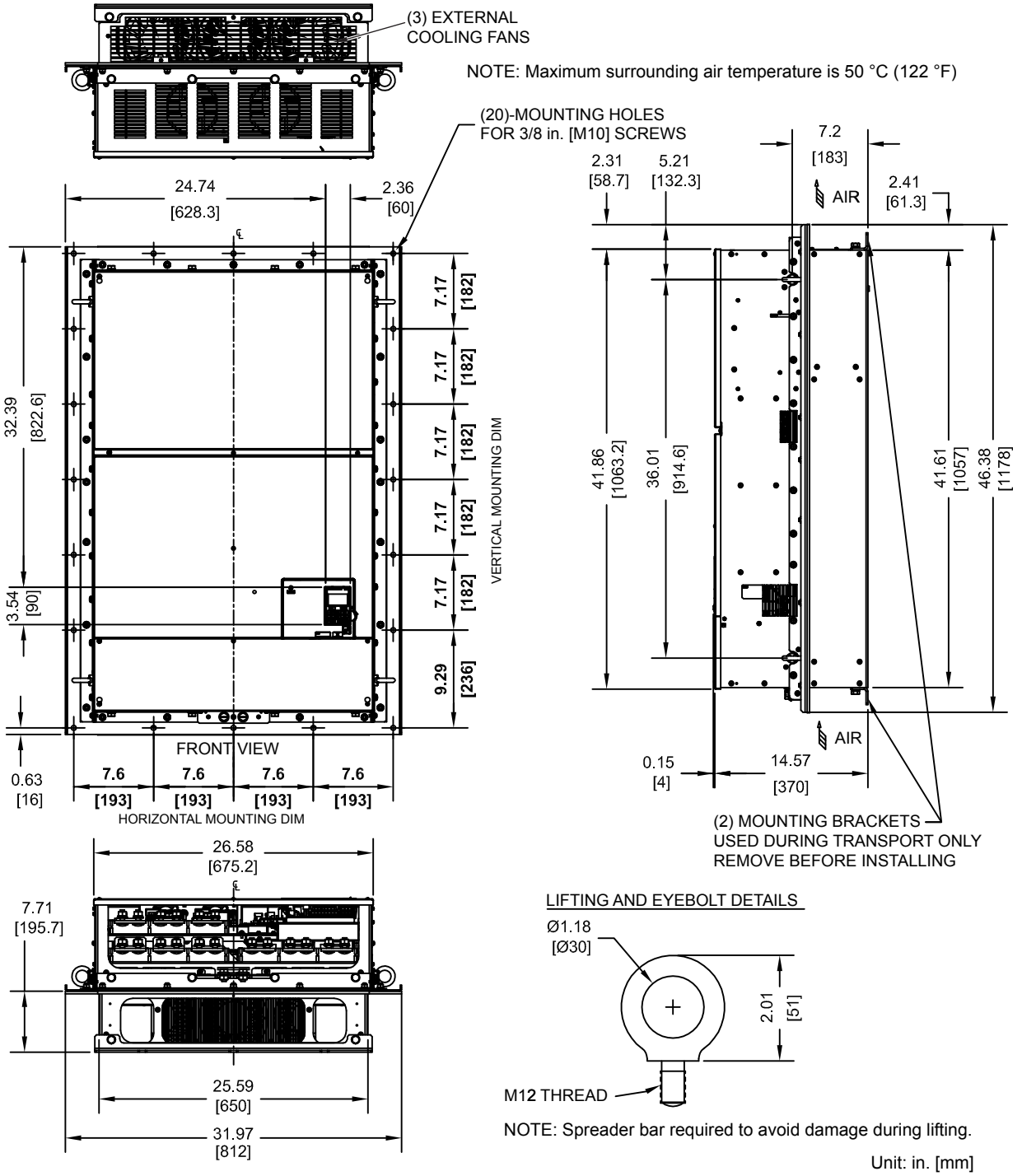

Figure 2.41 Models 4A0515 and 4A0675

■ Flange Type Heat Loss Data

Table 2.26 Models 4A0515 and 4A0675

Drive Model	Voltage Class	Heat Loss (W)						Wt. kg (lb)
		ND (Fc = 2 kHz)			HD (Fc = 8 kHz)			
		Internal	External	Total	Internal	External	Total	
4A0515	400	1668	4850	6518	1386	3972	5358	223 (492)
4A0675		2037	4861	6898	1685	4191	5876	228 (503)

■ Flange Type Panel Cutout Dimensions for External Heatsink Mounting

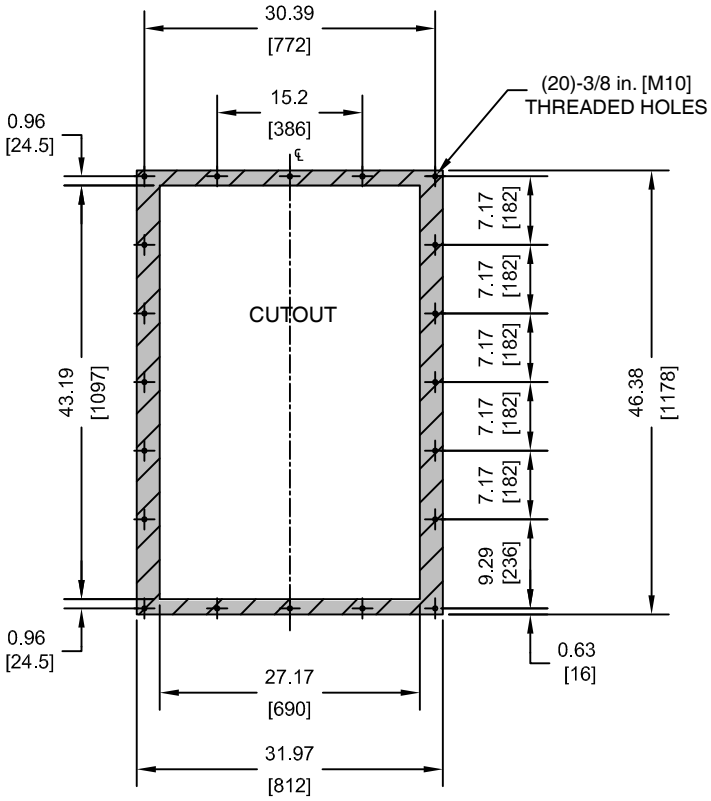

NOTES:
1. CUTOUT TOLERANCES:
   +/- 0.02 in. [0.5 mm]
2. EXPOSED HEATSINK DEPTH
   D=7.71 in. [196 mm] MINUS PANEL THICKNESS
3. MINIMUM RECOMMENDED PANEL
   THICKNESS: 10 GA

Unit: in. [mm]

Figure 2.42 Models 4A0515 and 4A0675

◆ Flange Type Models 4A0930 and 4A1200

■ Flange Type Exterior and Mounting Dimensions

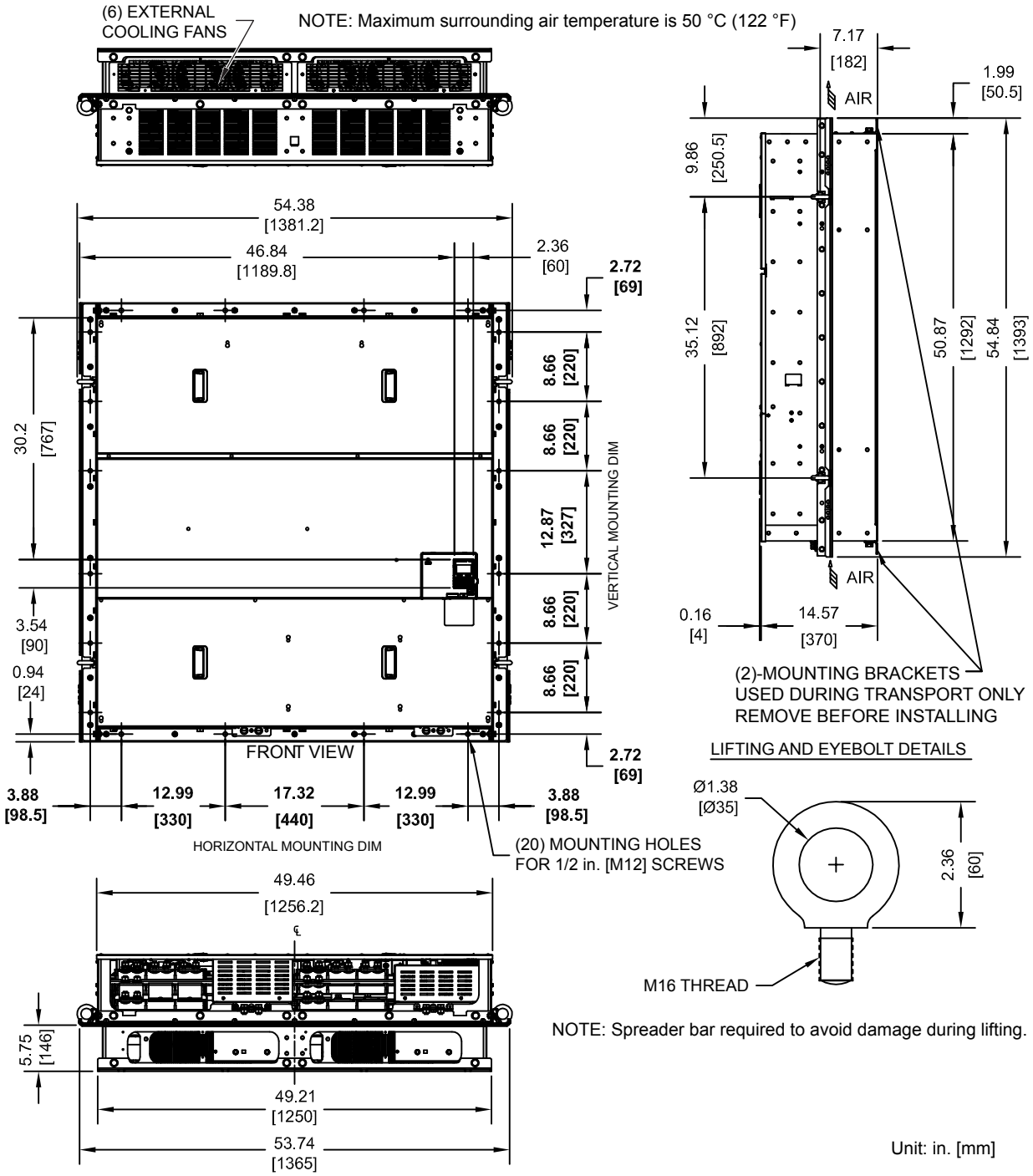

Figure 2.43 Models 4A0930 and 4A1200

■ Flange Type Heat Loss Data

Table 2.27 Models 4A0930 and 4A1200

Drive Model	Voltage Class	Heat Loss (W)						Wt. kg (lb)
		ND (Fc = 2 kHz)			HD (Fc = 8 kHz)			
		Internal	External	Total	Internal	External	Total	
4A0930	400	2952	8476	11428	2455	6912	9367	575 (1265)
4A1200		3612	8572	12184	3155	7626	10781	587 (1291)

■ Flange Type Panel Cutout Dimensions for External Heatsink Mounting

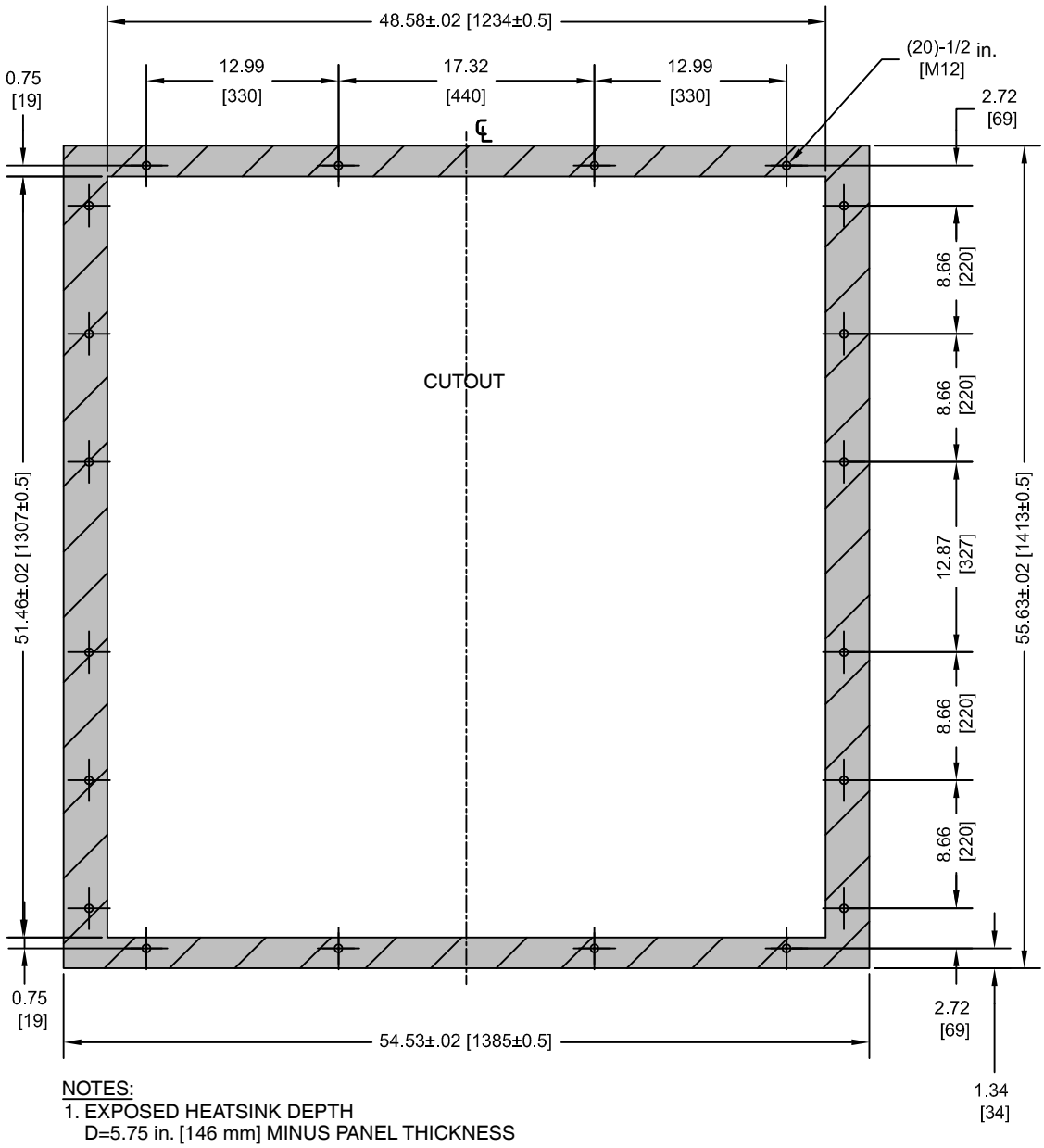

NOTES:
1. EXPOSED HEATSINK DEPTH
   D=5.75 in. [146 mm] MINUS PANEL THICKNESS
2. MINIMUM RECOMMENDED PANEL
   THICKNESS: 10 GA

Unit: in. [mm]

Figure 2.44 Models 4A0930 and 4A1200

This Page Intentionally Blank

3

Electrical Installation

This chapter explains proper procedures for wiring the control circuit terminals, motor, and power supply.

3.1 SECTION SAFETY....110
3.2 STANDARD CONNECTION DIAGRAM....112
3.3 MAIN CIRCUIT CONNECTION DIAGRAM....115
3.4 TERMINAL BLOCK CONFIGURATION....119
3.5 TERMINAL COVER....121
3.6 DIGITAL OPERATOR AND FRONT COVER....123
3.7 TOP PROTECTIVE COVER....126
3.8 MAIN CIRCUIT WIRING....127
3.9 CONTROL CIRCUIT WIRING....139
3.10 CONTROL I/O CONNECTIONS....145
3.11 CONNECT TO A PC....149
3.12 EXTERNAL INTERLOCK....150
3.13 WIRING CHECKLIST....151

3.1 Section Safety

⚠ DANGER

Electrical Shock Hazard

Before servicing, disconnect all power to the equipment. The internal capacitor remains charged even after the power supply is turned off. The charge indicator LED will extinguish when the DC bus voltage is below 50 Vdc. To prevent electric shock, wait for at least the time specified on the warning label, once all indicators are OFF, measure for unsafe voltages to confirm the drive is safe prior to servicing.

Failure to comply will result in death or serious injury.

⚠ WARNING

Electrical Shock Hazard

Do not operate equipment with covers removed.

Failure to comply could result in death or serious injury.

The diagrams in this section may show drives without covers or safety shields to show details. Be sure to reinstall covers or shields before operating the drives and run the drives according to the instructions described in this manual.

Make sure the protective earthing conductor complies with technical standards and local safety regulations.

Because the leakage current exceeds 3.5 mA in models 4A0414 and larger, IEC/EN 61800-5-1 states that either the power supply must be automatically disconnected in case of discontinuity of the protective earthing conductor or a protective earthing conductor with a cross-section of at least 10 mm^2 (Cu) or 16 mm^2 (Al) must be used. Failure to comply may result in death or serious injury.

Always use appropriate equipment for Ground Fault Circuit Interrupters (GFCIs).

The drive can cause a residual current with a DC component in the protective earthing conductor. Where a residual current operated protective or monitoring device is used for protection in case of direct or indirect contact, always use a type B GFCI according to IEC/EN 60755.

Always ground the motor-side grounding terminal.

Improper equipment grounding could result in death or serious injury by contacting the motor case.

Do not perform work on the drive while wearing loose clothing, jewelry or without eye protection.

Failure to comply could result in death or serious injury.

Remove all metal objects such as watches and rings, secure loose clothing, and wear eye protection before beginning work on the drive.

Do not remove covers or touch circuit boards while the power is on.

Failure to comply could result in death or serious injury.

Do not allow unqualified personnel to perform work on the drive.

Failure to comply could result in death or serious injury.

Installation, maintenance, inspection, and servicing must be performed only by authorized personnel familiar with installation, adjustment, and maintenance of AC drives.

Do not touch any terminals before the capacitors have fully discharged.

Failure to comply could result in death or serious injury.

Before wiring terminals, disconnect all power to the equipment. The internal capacitor remains charged even after the power supply is turned off. After shutting off the power, wait for at least the amount of time specified on the drive before touching any components.

⚠ WARNING

Fire Hazard

Tighten all terminal screws to the specified tightening torque.

Loose electrical connections could result in death or serious injury by fire due to overheating of electrical connections.

Do not use improper combustible materials.

Failure to comply could result in death or serious injury by fire.

Do not install the drive to a combustible surface. Never place combustible materials on the drive.

Do not use an improper voltage source.

Failure to comply could result in death or serious injury by fire.

Verify that the rated voltage of the drive matches the voltage of the incoming power supply before applying power.

When installing dynamic braking options, perform all wiring exactly as specified in the wiring diagrams provided.

Failure to do so can result in fire. Improper wiring may damage braking components.

⚠ CAUTION

Do not carry the drive by the front cover or the terminal cover.

Failure to comply may cause the main body of the drive to fall, resulting in minor or moderate injury.

NOTICE

Observe proper electrostatic discharge procedures (ESD) when handling the drive and circuit boards.

Failure to comply may result in ESD damage to the drive circuitry.

Never connect or disconnect the motor from the drive while the drive is outputting voltage.

Improper equipment sequencing could result in damage to the drive.

Do not use unshielded cable for control wiring.

Failure to comply may cause electrical interference resulting in poor system performance. Use shielded, twisted-pair wires and ground the shield to the ground terminal of the drive.

Do not allow unqualified personnel to use the product.

Failure to comply could result in damage to the drive or braking circuit.

Carefully review instruction manual TOBPC72060000 or TOBPC72060001 when connecting a dynamic braking option to the drive.

Do not modify the drive circuitry.

Failure to comply could result in damage to the drive and will void warranty.

Yaskawa is not responsible for any modification of the product made by the user. This product must not be modified.

Check all the wiring to ensure that all connections are correct after installing the drive and connecting any other devices.

Failure to comply could result in damage to the drive.

3.2 Standard Connection Diagram

Connect the drive and peripheral devices as shown in ***Figure 3.1***. It is possible to set and run the drive via the digital operator without connecting digital I/O wiring. This section does not discuss drive operation; ***Refer to Start-Up Programming & Operation on page 153*** for instructions on operating the drive.

NOTICE: *Inadequate wiring could result in damage to the drive. Install adequate branch circuit short circuit protection per applicable codes. The drive is suitable for circuits capable of delivering not more than 100,000 RMS symmetrical amperes, 240 Vac maximum (200 V class), 480 Vac maximum (400 V class), 600 Vac maximum (600 V class).*

NOTICE: *When the input voltage is 440 V or higher or the wiring distance is greater than 100 meters, pay special attention to the motor insulation voltage or use a drive duty motor. Failure to comply could lead to motor insulation breakdown.*

NOTICE: *Do not connect AC control circuit ground to drive enclosure. Improper drive grounding can cause control circuit malfunction.*

NOTICE: *Route motor leads U/T1, V/T2, and W/T3 separate from all other leads to reduce possible interference related issues. Failure to comply may result in abnormal operation of drive and nearby equipment.*

NOTICE: *Correctly set Sink/Source jumper S3 for internal power supply. Failure to comply may result in damage to the drive.* ***Refer to Control I/O Connections on page 145*** *for details.*

Note: The minimum load for the relay outputs M1-M2, M3-M4, M5-M6, and MA-MB-MC is 10 mA.

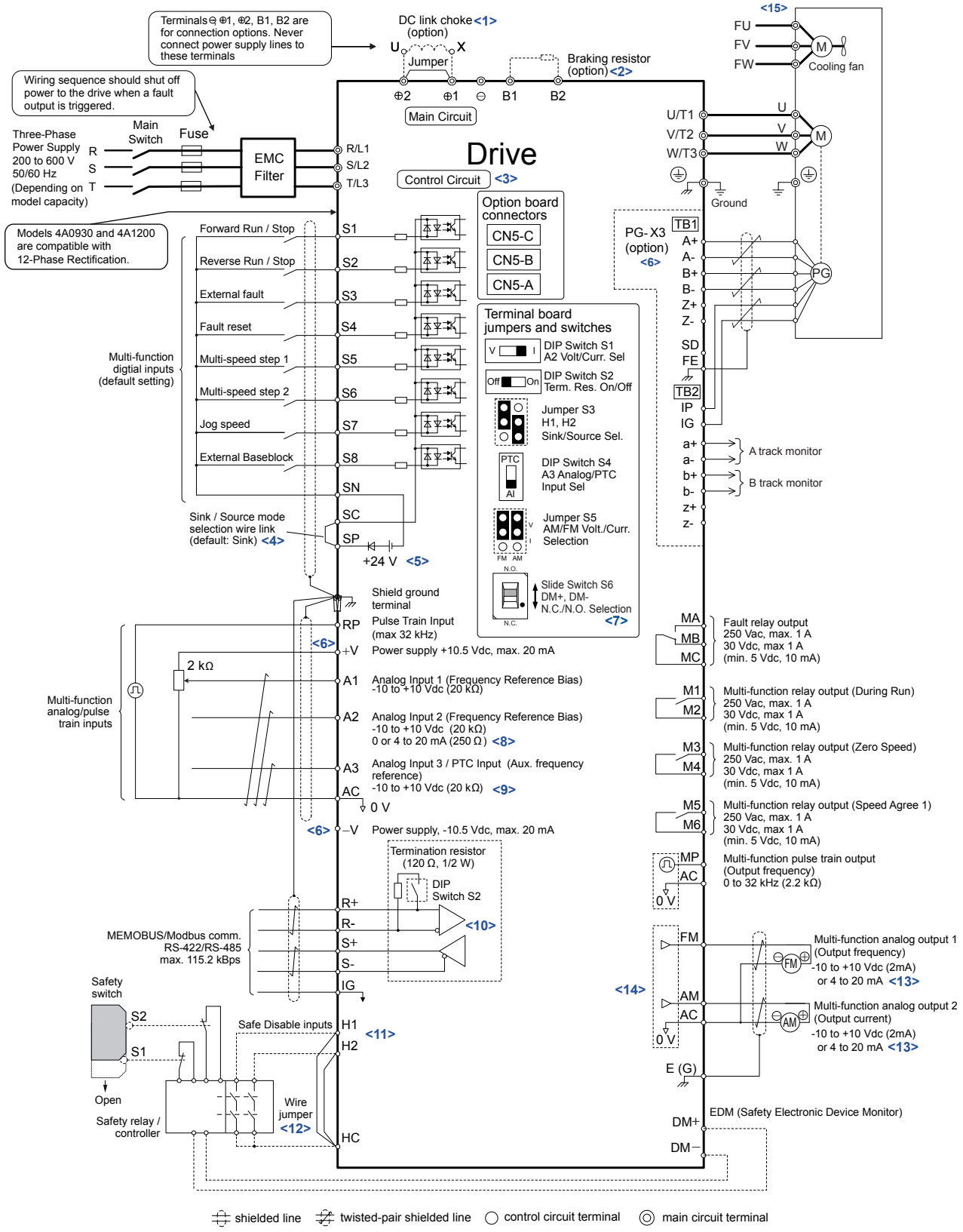

Figure 3.1 Drive Standard Connection Diagram (example: model 2A0040)

<1> Remove the jumper when installing a DC link choke. Models 2A0110 to 2A0415 and 4A0058 to 4A1200 come with a built-in DC link choke.

<2> Set L8-55 to 0 to disable the protection function of the built-in braking transistor of the drive when using an optional regenerative converter or dynamic braking option. Leaving L8-55 enabled may cause a braking resistor fault (rF). Additionally, disable Stall Prevention (L3-04 = 0) when using an optional regenerative converter, regenerative or braking units, or dynamic braking option. Leaving If L3-04 enabled may prevent the drive from stopping within the specified deceleration time.

<3> Supplying power to the control circuit separately from the main circuit requires 24 V power supply (option).

<4> This figure illustrates an example of a sequence input to S1 through S8 using a non-powered relay or an NPN transistor. Install the wire link between terminals SC-SP for Sink mode, between SC-SN for Source mode, or leave the link out for external power supply. Never short terminals SP and SN, as it will damage the drive. ***Refer to Sinking/Sourcing Mode for Digital Inputs on page 145*** for details.

<5> This voltage source supplies a maximum current of 150 mA when not using a digital input card DI-A3.

<6> The maximum output current capacity for the +V and -V terminals on the control circuit is 20 mA. Never short terminals +V, -V, and AC, as it can cause erroneous operation or damage the drive.

<7> Slide switch S6 selects N.C. or N.O. as the state of the DM+ and DM- terminals for EDM output. Slide switch S6 is available on removable terminal circuit boards ETC740300, ETC740301 and later.

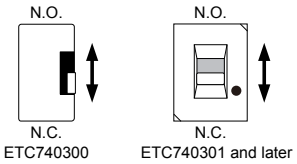

<8> Set DIP switch S1 to select between a voltage or current input signal to terminal A2. The default setting is for current input.

<9> Set DIP switch S4 to select between analog or PTC input for terminal A3.

<10> Set DIP switch S2 to the ON position to enable the termination resistor in the last drive in a MEMOBUS/Modbus network.

<11> Use jumper S3 to select between Sink mode, Source mode, and external power supply for the Safe Disable inputs.

<12> Disconnect the wire jumper between H1 - HC and H2 - HC when utilizing the Safe Disable input.

<13> Monitor outputs work with devices such as analog frequency meters, ammeters, voltmeters, and wattmeters. They are not intended for use as a feedback-type signal.

<14> Use jumper S5 to select between voltage or current output signals at terminals AM and FM. Set parameters H4-07 and H4-08 accordingly.

<15> Self-cooling motors do not require the same wiring necessary for motors with cooling fans.

WARNING! *Sudden Movement Hazard. Do not close the wiring for the control circuit unless the multifunction input terminal parameters are properly set. Improper sequencing of run/stop circuitry could result in death or serious injury from moving equipment.*

WARNING! *Sudden Movement Hazard. Ensure start/stop and safety circuits are wired properly and in the correct state before energizing the drive. Failure to comply could result in death or serious injury from moving equipment. When programmed for 3-Wire control, a momentary closure on terminal S1 may cause the drive to start.*

WARNING! *Sudden Movement Hazard. When using a 3-Wire sequence, set the drive to 3-Wire sequence prior to wiring the control terminals and set parameter b1-17 to 0 so the drive will not accept a Run command at power up (default). If the drive is wired for a 3-Wire sequence but set up for a 2-Wire sequence (default), and parameter b1-17 is set to 1 so the drive accepts a Run command at power up, the motor will rotate in reverse direction at drive power up and may cause injury.*

WARNING! *Sudden Movement Hazard. Confirm the drive I/O signals and external sequence before executing the application preset function. Executing the application preset function or setting A1-06 ≠ 0 will change the drive I/O terminal functions and may cause unexpected equipment operation. Failure to comply may cause death or serious injury.*

NOTICE: *When using the automatic fault restart function with wiring designed to shut off the power supply upon drive fault, make sure the drive does not trigger a fault output during fault restart (L5-02 = 0, default). Failure to comply will prevent the automatic fault restart function from working properly.*

NOTICE: *Do not connect more than one multi-function input to one terminal. Improper wiring may result in drive malfunction. Use an external power supply when sharing a terminal with more than one input. Do not use the built-in +24 V power supply.*

3.3 Main Circuit Connection Diagram

Refer to diagrams in this section when wiring the main circuit of the drive. Connections may vary based on drive capacity. The DC power supply for the main circuit also provides power to the control circuit.

NOTICE: *Do not use the negative DC bus terminal "–" as a ground terminal. This terminal is at high DC voltage potential. Improper wiring connections could damage the drive.*

NOTICE: *Route motor leads U/T1, V/T2 and W/T3 separate from all other leads to reduce possible interference and noise related issues. Failure to comply may result in abnormal operation of drive and nearby equipment.*

◆ Three-Phase 200 V Class Models 2A0004 to 2A0081 Three-Phase 400 V Class Models 4A0002 to 4A0044 Three-Phase 600 V Class Models 5A0003 to 5A0032

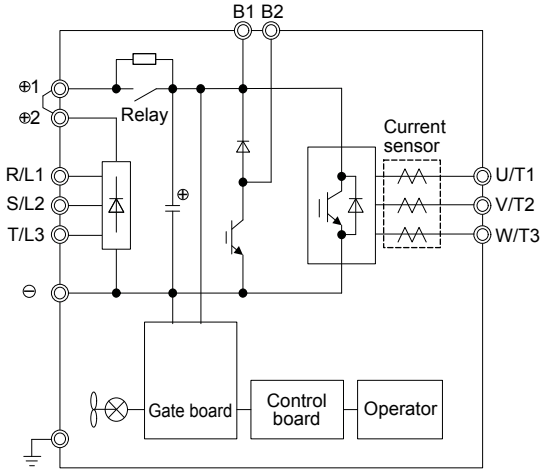

Figure 3.2 Connecting Main Circuit Terminals

◆ Three-Phase 200 V Class Models 2A0110, 2A0138 Three-Phase 400 V Class Models 4A0058, 4A0072 Three-Phase 600 V Class Models 5A0041, 5A0052

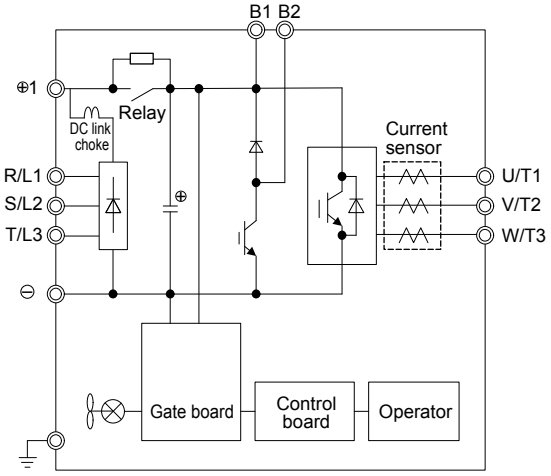

Figure 3.3 Connecting Main Circuit Terminals

◆ Three-Phase 200 V Class Models 2A0169 to 2A0211 Three-Phase 400 V Class Models 4A0088 to 4A0139 Three-Phase 600 V Class Models 5A0062 to 5A0099

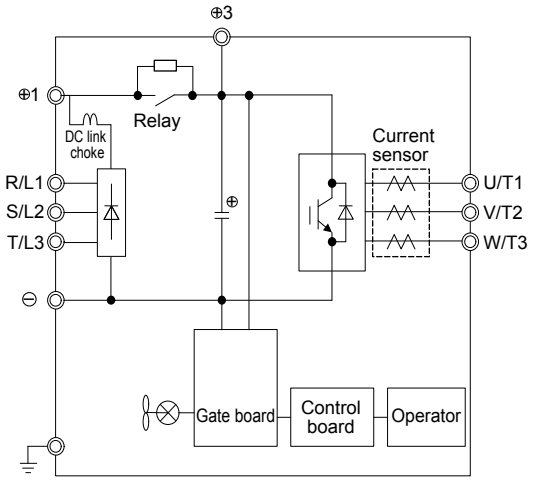

Figure 3.4 Connecting Main Circuit Terminals

◆ Three-Phase 200 V Class Models 2A0250 to 2A0415 Three-Phase 400 V Class Models 4A0165 to 4A0675 Three-Phase 600 V Class Models 5A0125 to 5A0242

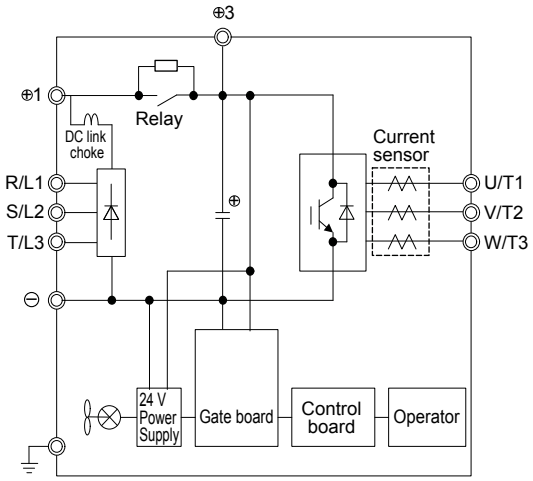

Figure 3.5 Connecting Main Circuit Terminals

◆ Three-Phase 400 V Class Models 4A0930, 4A1200

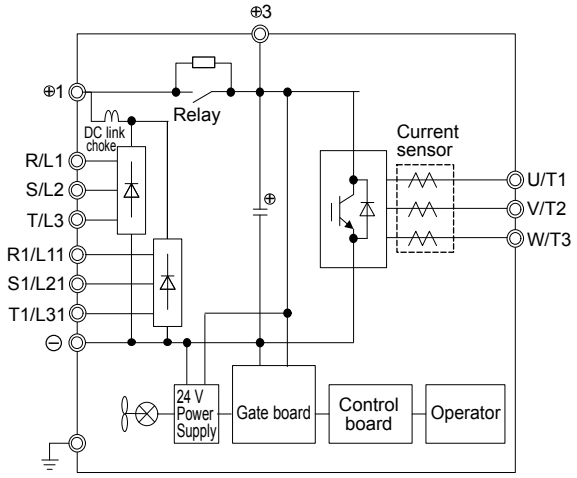

Figure 3.6 Connecting Main Circuit Terminals

Note: Models 4A0930 and 4A1200 are compatible for operation with 12-pulse rectification. *Refer to 12-Pulse Rectification on page 117* for details.

◆ 12-Pulse Rectification

■ Removing the Jumper

Models 4A0930 and 4A1200 are compatible for operation with 12-pulse rectification. Operation with 12-pulse rectification requires the user to separately prepare a 3-winding transformer for the power supply. Contact Yaskawa or your nearest sales representative for transformer specifications.

WARNING! *Fire Hazard. Failure to remove jumpers shorting the power supply terminals on the main circuit when operating with 12-pulse rectification may cause death or serious injury by fire.*

■ Application Notes

Models 4A0930 and 4A1200 are shipped from the factory with jumpers short-circuiting terminals R/L1-R1/L11, S/L2-S1/L21, and T/L3-T1/L31.

Remove M5 screws and jumpers as shown in *Figure 3.7* to operate with 12-pulse rectification.

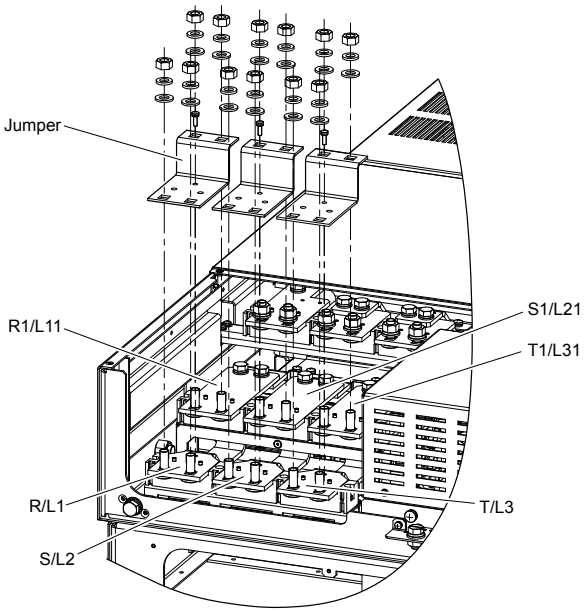

Figure 3.7 Removing the Jumper

■ Connection Diagram

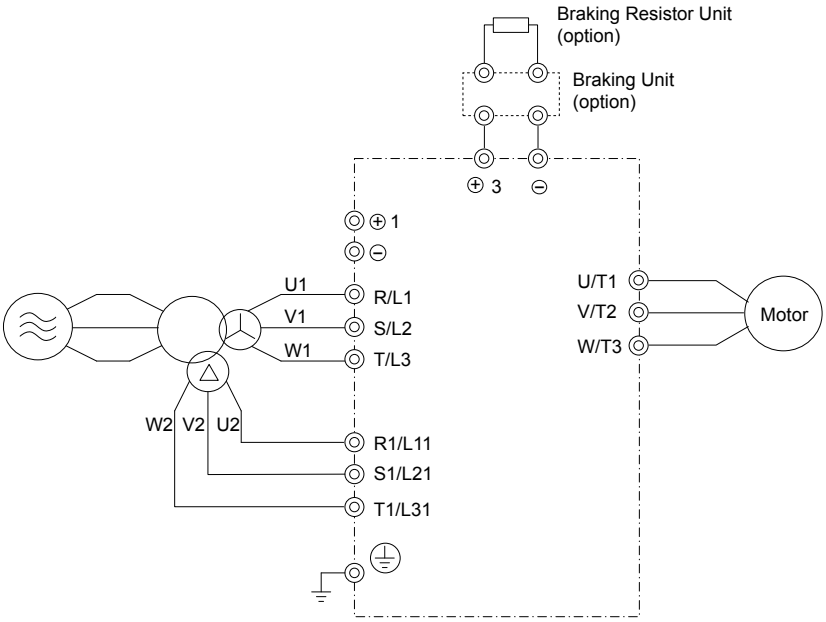

Figure 3.8 Connecting Main Circuit Terminals

3.4 Terminal Block Configuration

Figure 3.9 and *Figure 3.10* show the different main circuit terminal arrangements for the drive capacities.

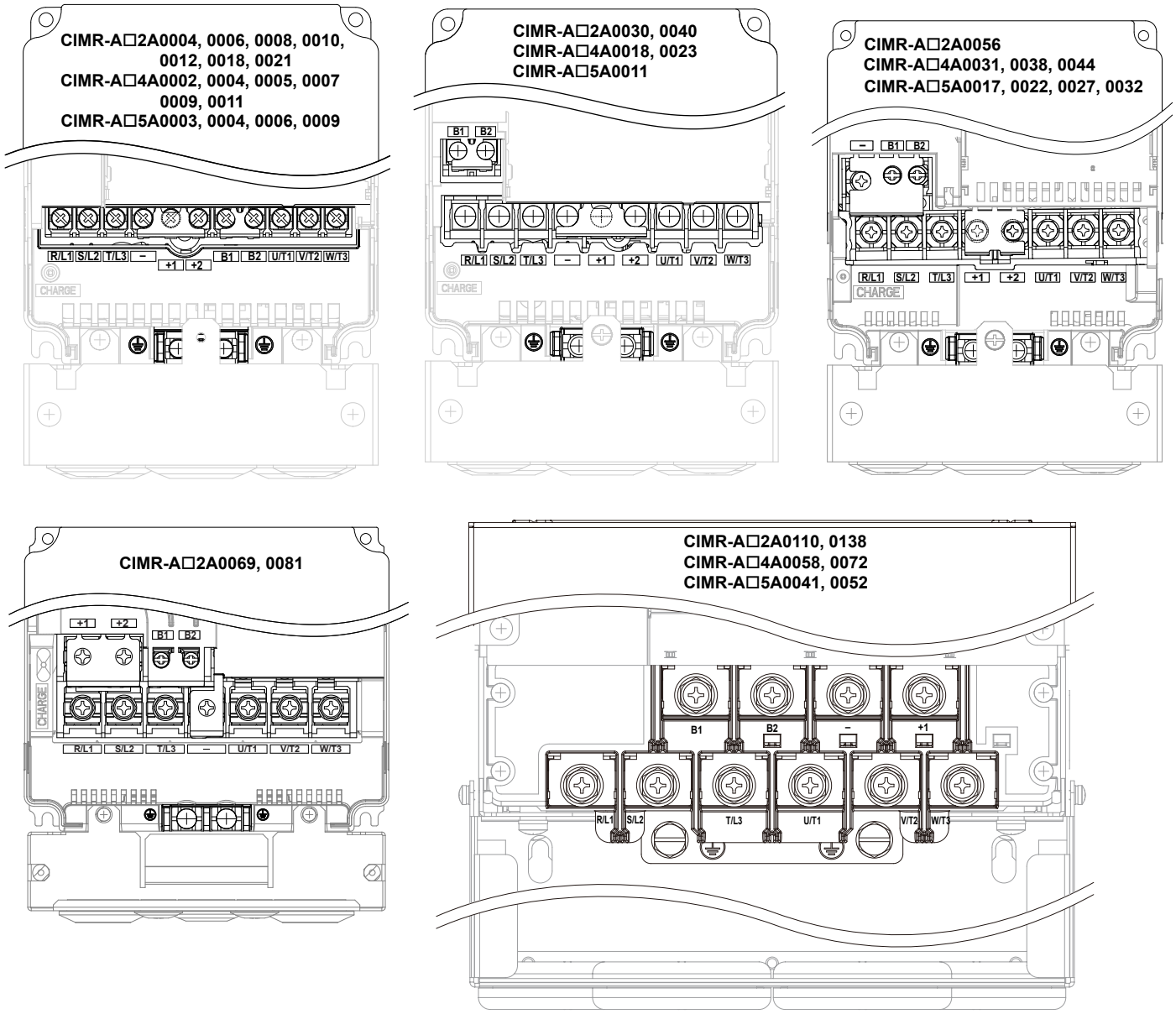

Figure 3.9 Main Circuit Terminal Block Configuration

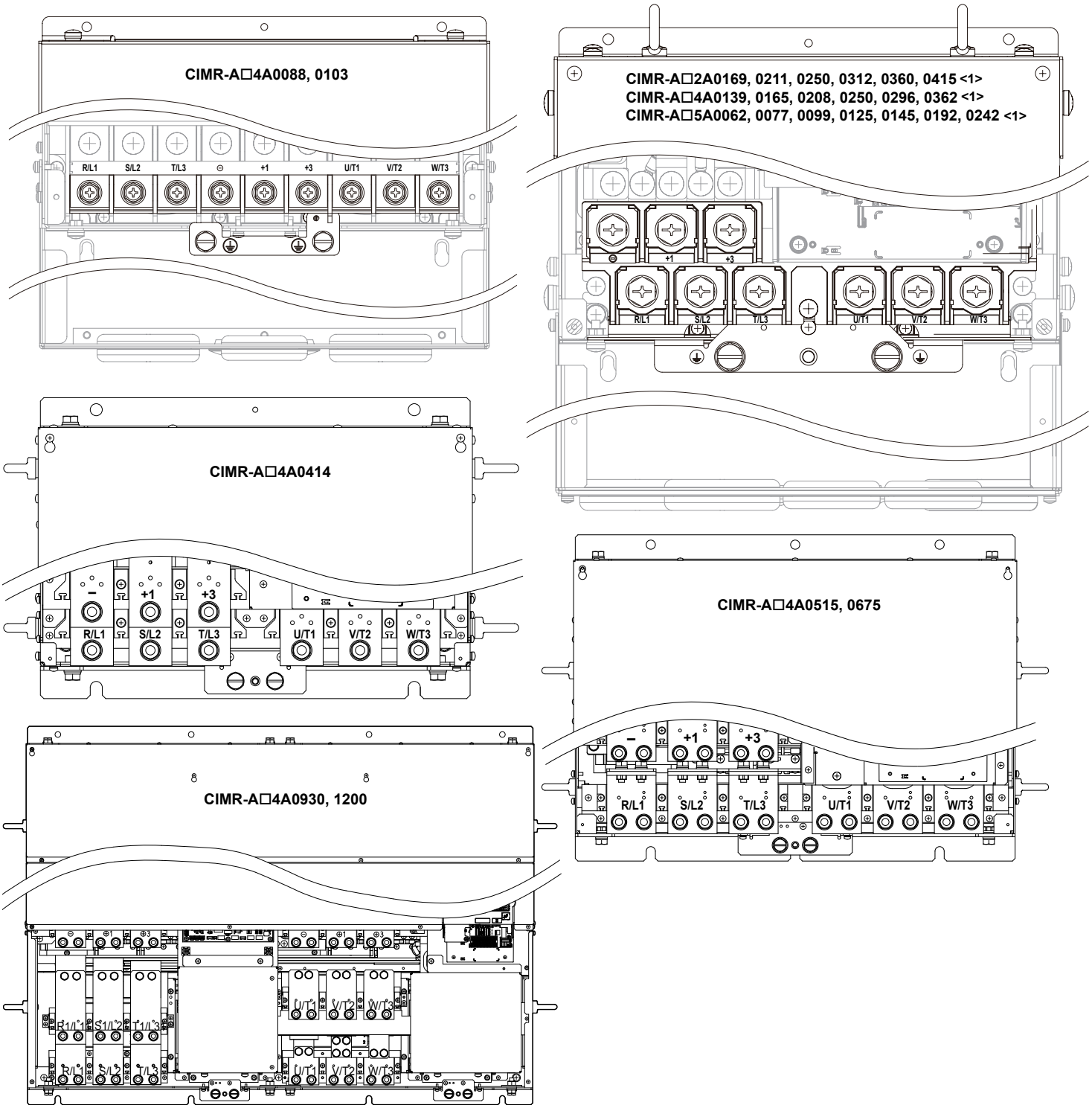

Figure 3.10 Main Circuit Terminal Block Configuration (continued)

<1> Terminal block design differs slightly for models 2A0250 to 2A0415, 4A0208 to 4A0362, and 5A0125 to 5A0242.

3.5 Terminal Cover

Follow the procedure below to remove the terminal cover for wiring and to reattach the terminal cover after wiring is complete.

◆ Models 2A0004 to 2A0081, 4A0002 to 4A0044, 5A0003 to 5A0032 (IP20/NEMA 1, UL Type 1 Enclosure)

■ Removing the Terminal Cover

1. Loosen the terminal cover screw using a #2 Phillips screwdriver. Screw sizes vary by drive model.

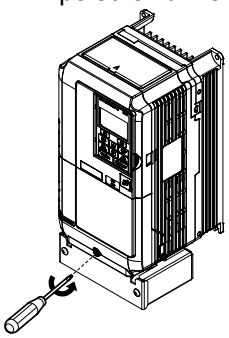

Figure 3.11 Removing the Terminal Cover on an IP20/UL Type 1 Enclosure Drive

2. Push in on the tab located on the bottom of the terminal cover and gently pull forward to remove the terminal cover.

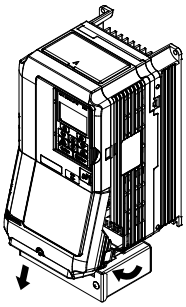

Figure 3.12 Removing the Terminal Cover on an IP20/UL Type 1 Enclosure Drive

■ Reattaching the Terminal Cover

Power lines and signal wiring should pass through the opening provided. *Refer to Wiring the Main Circuit Terminal on page 138* and *Wiring the Control Circuit Terminal* on page *142* for details on wiring.

Reattach the terminal cover after completing the wiring to the drive and other devices.

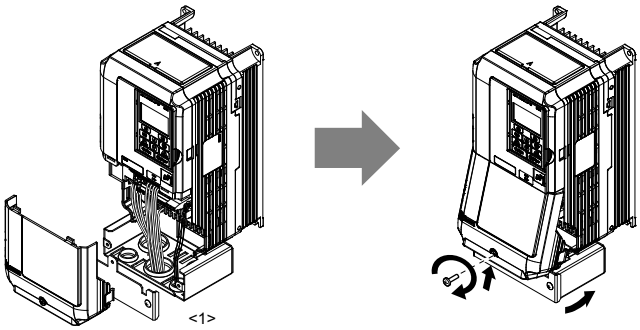

Figure 3.13 Reattaching the Terminal Cover on an IP20/UL Type 1 Enclosure Drive

<1> Connect the ground wiring first, then the main circuit wiring, and finally the control circuit wiring.

◆ Models 2A0110 to 2A0250, 4A0208 to 4A1200, and 5A0125 to 5A0242 (IP00/Open Type Enclosure)

■ Removing the Terminal Cover

1. Loosen the screws on the terminal cover, then pull down on the cover.

Note: The terminal cover and the number of terminal cover screws differ depending on the drive model. ***Refer to Component Names on page 41*** for details.

CAUTION! *Do not completely remove the cover screws, just loosen them. If the cover screws are removed completely, the terminal cover may fall off causing an injury.*

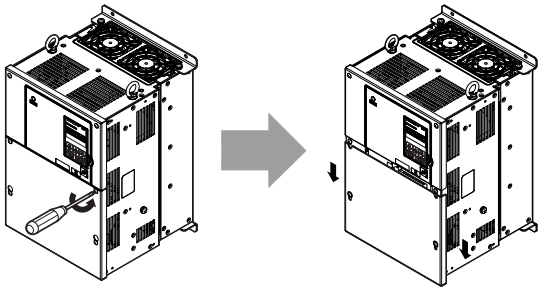

Figure 3.14 Removing the Terminal Cover on an IP00/Open Type Enclosure Drive

2. Pull forward on the terminal cover to free it from the drive.

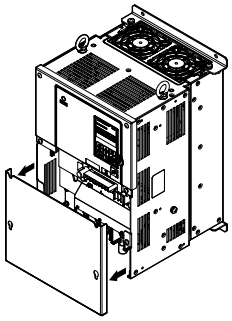

Figure 3.15 Removing the Terminal Cover on an IP00/Open Type Enclosure Drive

■ Reattaching the Terminal Cover

After wiring the terminal board and other devices, double-check connections and reattach the terminal cover. ***Refer to Wiring the Main Circuit Terminal on page 138*** and ***Wiring the Control Circuit Terminal*** on page ***142*** for details on wiring.

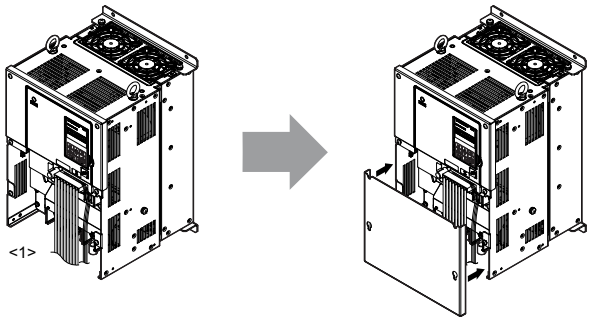

Figure 3.16 Reattaching the Terminal Cover on an IP00/Open Type Enclosure Drive

<1> Connect the ground wiring first, then the main circuit wiring, and finally the control circuit wiring.

3.6 Digital Operator and Front Cover

Detach the digital operator from the drive for remote operation or when opening the front cover to install an option card.

NOTICE: *Be sure to remove the digital operator prior to opening or reattaching the front cover. Leaving the digital operator plugged into the drive when removing the front cover can result in erroneous operation caused by a poor connection. Firmly fasten the front cover back into place before reattaching the digital operator.*

◆ Removing/Reattaching the Digital Operator

■ Removing the Digital Operator

While pressing on the tab located on the right side of the digital operator, pull the digital operator forward to remove it from the drive.

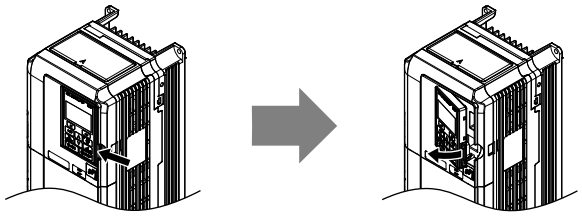

Figure 3.17 Removing the Digital Operator

■ Reattaching the Digital Operator

Insert the digital operator into the opening in the top cover while aligning it with the notches on the left side of the opening. Next, press gently on the right side of the operator until it clicks into place.

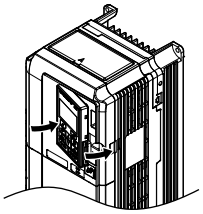

Figure 3.18 Reattaching the Digital Operator

◆ Removing/Reattaching the Front Cover

■ Removing the Front Cover

Models 2A0004 to 2A0081, 4A0002 to 4A0044, and 5A0003 to 5A0032

After removing the terminal cover and the digital operator, loosen the screw that affixes the front cover (models 2A0056, 4A0038, 5A0022, and 5A0027 do not use a screw to affix the front cover) . Pinch in on the tabs found on each side of the front cover, then pull forward to remove it from the drive.

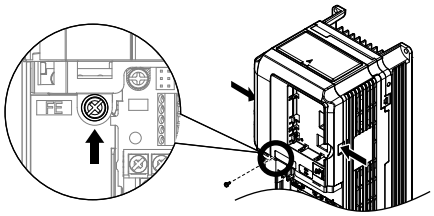

Figure 3.19 Remove the Front Cover (2A0004 to 2A0081, 4A0002 to 4A0044, and 5A0003 to 5A0032)

Models 2A0110 to 2A0415 and 4A0058 to 4A1200

1. Remove the terminal cover and the digital operator.
2. Loosen the installation screw on the front cover.
3. Use a straight-edge screwdriver to loosen the hooks on each side of the cover that hold it in place.

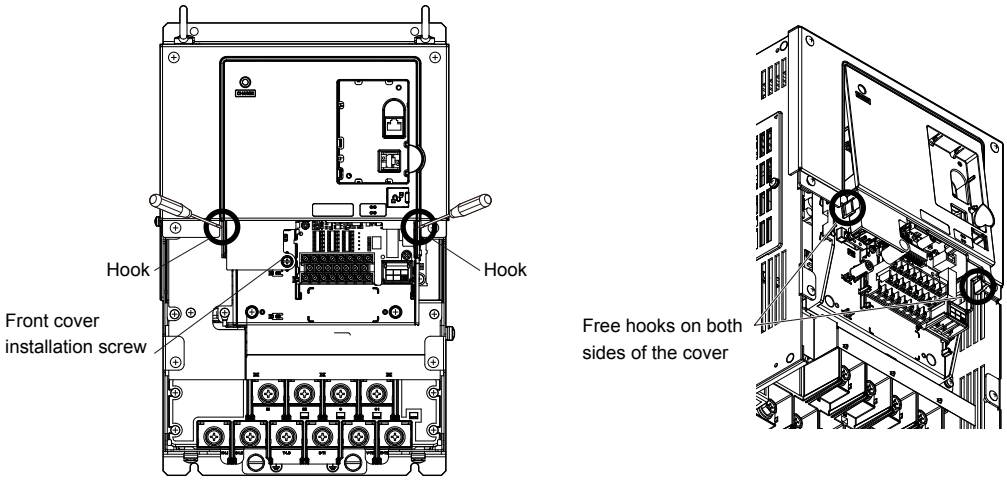

Figure 3.20 Remove the Front Cover (2A0010 to 2A0415 and 4A0058 to 4A1200)

4. Unhook the left side of the front cover then swing the left side towards you as shown in ***Figure 3.21*** until the cover comes off.

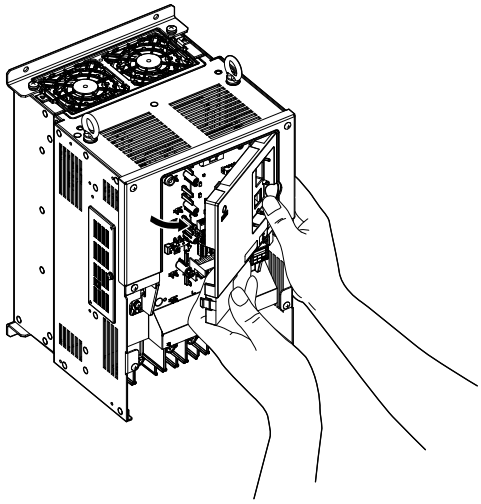

Figure 3.21 Remove the Front Cover (2A0010 to 2A0415 and 4A0058 to 4A1200)

■ Reattaching the Front Cover

Models 2A0004 to 2A0081, 4A0002 to 4A0044, and 5A0003 to 5A0032

Reverse the instructions given in *Remove the Front Cover (2A0004 to 2A0081, 4A0002 to 4A0044, and 5A0003 to 5A0032)* on page *123* to reattach the front cover. Pinch inwards on the hooks found on each side of the front cover while guiding it back into the drive. Make sure it clicks firmly into place.

Models 2A0110 to 2A0415 and 4A0058 to 4A1200

1. Slide the front cover so the hooks on the top connect to the drive.

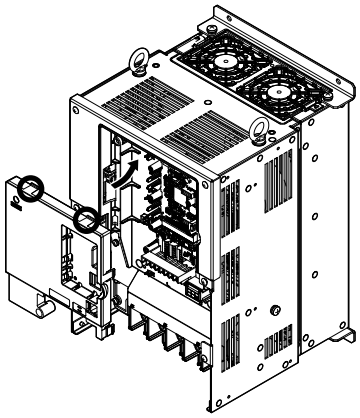

Figure 3.22 Reattach the Front Cover (2A0110 to 2A0415 and 4A0058 to 4A1200)

2. After connecting the hooks to the drive, press firmly on the cover to lock it into place.

3.7 Top Protective Cover

Drive models 2A0004 to 2A0081, 4A0002 to 4A0044, and 5A0003 to 5A0032 are designed to IP20/NEMA 1, UL Type 1 specifications with a protective cover on the top. Removing this top protective cover or the bottom conduit bracket from an IP20/NEMA 1, UL Type 1 enclosure drive voids the NEMA 1, UL Type 1 protection while maintaining IP20 conformity.

◆ Removing the Top Protective Cover

Insert the tip of a straight-edge screwdriver into the small opening located on the front edge of the top protective cover. Gently apply pressure as shown in the figure below to free the cover from the drive.

Note: Removing the top protective cover or the bottom conduit bracket from an IP20/UL Type 1 enclosure drive voids the UL Type 1 protection while maintaining IP20 conformity.

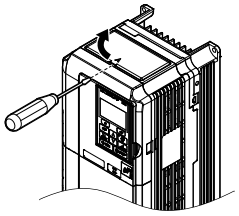

Figure 3.23 Removing the Top Protective Cover

◆ Reattaching the Top Protective Cover

Insert the two small protruding hooks on the rear side of the top protective cover into the provided mounting holes near the back of the drive, then press down on the front side of the top protective cover to fasten the cover into place.

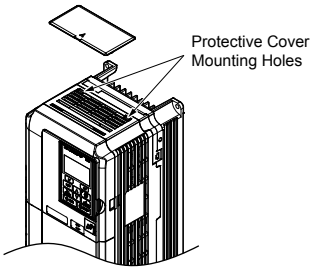

Figure 3.24 Reattaching the Protective Cover

3.8 Main Circuit Wiring

This section describes the functions, specifications, and procedures required to safely and properly wire the main circuit in the drive.

NOTICE: *Do not solder the ends of wire connections to the drive. Soldered wiring connections can loosen over time. Improper wiring practices could result in drive malfunction due to loose terminal connections.*

NOTICE: *Do not switch the drive input to start or stop the motor. Frequently switching the drive on and off shortens the life of the DC bus charge circuit and the DC bus capacitors, and can cause premature drive failures. For the full performance life, refrain from switching the drive on and off more than once every 30 minutes.*

Refer to Factory Recommended Branch Circuit Protection for UL Compliance on page 760 for details on fuse selection.

◆ Main Circuit Terminal Functions

Table 3.1 Main Circuit Terminal Functions

Terminal		Type				Function	Page
200 V Class	Drive Model	2A0004 to 2A0081	2A0110, 2A0138	2A0169 to 2A0415	–		
400 V Class		4A0002 to 4A0044	4A0058, 4A0072	4A0088 to 4A0675	4A0930, 4A1200		
600 V Class		5A0003 to 5A0032	5A0041, 5A0052	5A0062 to 5A0242	–		
R/L1		Main circuit power supply input				Connects line power to the drive	113
S/L2							
T/L3							
R1-L11		Not available			Main circuit power supply input	Connects line power to the drive Remove the shorting bars connecting R/L1-R1/L11, S/L2-S1/L21, T/L3-T1/L31 when using 12-pulse rectification.	
S1-L21							
T1-L31							
U/T1		Drive output				Connects to the motor	113
V/T2							
W/T3							
B1		Braking resistor		Not available		Available for connecting a braking resistor or a braking resistor unit option	514
B2							
⊕2		• DC link choke connection (⊕1, ⊕2) (remove the shorting bar between ⊕1 and ⊕2) • DC power supply input (⊕1, ⊖)	Not available			For connecting: • the drive to a DC power supply • dynamic braking options • a DC link choke	518
⊕1			DC power supply input (⊕1, ⊖)	• DC power supply input (⊕1, ⊖) • Braking unit connection (⊕3, ⊖)			
⊖							
⊕3		Not available					
⏚		For 200 V class: 100 Ω or less For 400 V class: 10 Ω or less For 600 V class: 10 Ω or less				Grounding terminal	137

Note: Use terminals B1 and ⊖ when installing a CDBR-type braking unit on drives with built-in braking transistors (Models 2A0004 to 2A0138, 4A0002 to 4A0072, and 5A0003 to 5A0052).

Wiring Fuses for Models 4A0930 and 4A1200

NOTICE: *If a fuse is blown or an Ground Fault Circuit Interrupter (GFCI) is tripped, check the wiring and the selection of peripheral devices to identify the cause. Contact Yaskawa before restarting the drive or the peripheral devices if the cause cannot be identified.*

Install a fuse on the input side to protect drive wiring and prevent other secondary damage. Wire the fuse so that leakage current in the upper controller power supply will trigger the fuse and shut off the power supply.

Select the appropriate fuse from ***Table 3.2***.

Table 3.2 Input Fuses for Models 4A0930 and 4A1200

Voltage Class	Model	Selection			Input Fuse (Example)			
		Input Voltage	Current	Pre-arc I^2t (A^2s)	Model	Manufacturer	Rating	Pre-arc I^2t (A^2s)
Three-Phase 400 V Class	4A0930	480 V	1500 A	140000 to 3100000	CS5F-1200	Fuji Electric	AC500 V, 1200 A	276000
	4A0930 with 12-pulse rectification				FWH-1200A	Bussman	AC500 V, 1200 A	–
					FWH-1000A	Bussman	AC500 V, 1000 A	–
	4A1200	480 V	1500 A	320000 to 3100000	CS5F-1500	Fuji Electric	AC500 V, 1500 A	351000
	4A1200 with 12-pulse rectification				FWH-1600A	Bussman	AC500 V, 1600 A	–
					FWH-1200A	Bussman	AC500 V, 1200 A	–

◆ Protecting Main Circuit Terminals

■ Insulation Caps or Sleeves

Use insulation caps or sleeves when wiring the drive with crimp terminals. Take particular care to ensure that the wiring does not touch nearby terminals or the surrounding case.

■ Insulation Barrier

Insulation barriers are packaged with drive models 4A0414 through 4A1200 to provide added protection between terminals. Yaskawa recommends using the provided insulation barriers to ensure proper wiring. Refer to ***Figure 3.25*** for instructions on placement of the insulation barriers.

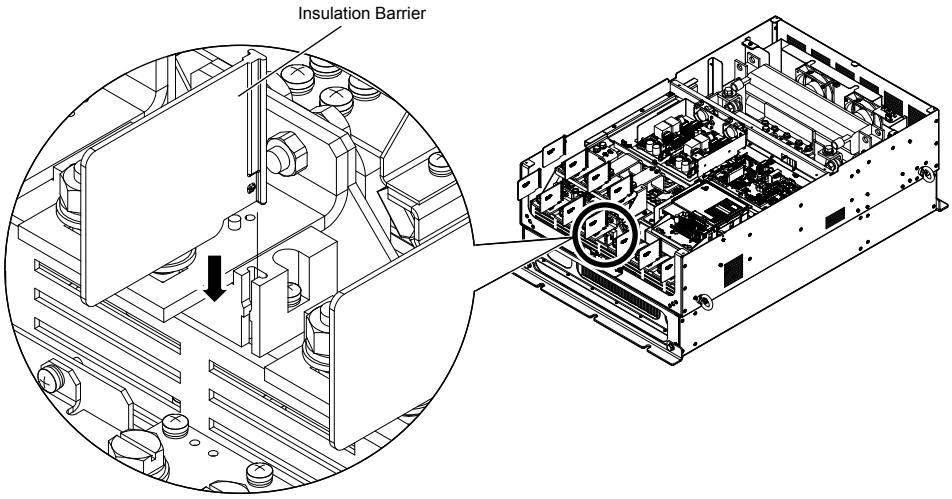

Figure 3.25 Installing Insulation Barriers

◆ Main Circuit Wire Gauges and Tightening Torques

Use the tables in this section to select the appropriate wires and crimp terminals.

Gauges listed in the tables are for use in the United States.

Note:
1. Wire gauge recommendations based on drive continuous current ratings (ND) using 75 °C 600 Vac vinyl-sheathed wire assuming ambient temperature within 40 °C and wiring distance less than 100 m.
2. Terminals ⊕1, ⊕2, ⊕3, ⊖, B1 and B2 are for connecting optional power devices. Use caution to connect only approved devices to the correct terminal(s).

- Consider the amount of voltage drop when selecting wire gauges. Increase the wire gauge when the voltage drop is greater than 2% of motor rated voltage. Ensure the wire gauge is suitable for the terminal block. Use the following formula to calculate the amount of voltage drop:

  Line drop voltage (V) = $\sqrt{3}$ × wire resistance (Ω/km) × wire length (m) × current (A) × 10^{-3}
- Refer to instruction manual TOBPC72060000 or TOBPC72060001 for braking transistor option or braking resistor option wire gauges.
- Use terminals ⊕1 and ⊖ when connecting a regenerative converter or a regen unit.

  NOTICE: *Do not connect a braking resistor to terminals ⊕1 or ⊖. Failure to comply may cause damage to the drive circuitry.*
- Use terminals B1 and ⊖ when installing a CDBR-type braking unit on drives with built-in braking transistors (models 2A0004 to 2A0138, 4A0002 to 4A0072, and 5A0003 to 5A0052).

  NOTICE: *Do not connect a braking resistor to terminals ⊕1 or ⊖. Failure to comply may cause damage to the drive circuitry.*
- ***Refer to UL Standards Compliance on page 748*** for information on UL compliance.

Yaskawa recommends using closed-loop crimp terminals on all drive models. UL/cUL approval requires the use of closed-loop crimp terminals when wiring the drive main circuit terminals on models 2A0110 to 2A0415 and 4A0058 to 4A1200. Use only the tools recommended by the terminal manufacturer for crimping. ***Refer to Closed-Loop Crimp Terminal Size on page 756*** for closed-loop crimp terminal recommendations.

The wire gauges listed in the following tables are Yaskawa recommendations. Refer to local codes for proper wire gauge selections.

■ Three-Phase 200 V Class

Table 3.3 Wire Gauge and Torque Specifications (Three-Phase 200 V Class)

Drive Model	Terminal	Recomm. Gauge AWG, kcmil	Wire Range AWG, kcmil	Screw Size	Tightening Torque N·m (lb.in.)
2A0004 2A0006 2A0008 2A0010	R/L1, S/L2, T/L3	14	14 to 10	M4	1.2 to 1.5 (10.6 to 13.3)
	U/T1, V/T2, W/T3	14	14 to 10		
	⊖, ⊕1, ⊕2	–	14 to 10		
	B1, B2	–	14 to 10		
	⏚	10 <1>	14 to 10		
2A0012	R/L1, S/L2, T/L3	12	14 to 10	M4	1.2 to 1.5 (10.6 to 13.3)
	U/T1, V/T2, W/T3	14	14 to 10		
	⊖, ⊕1, ⊕2	–	14 to 10		
	B1, B2	–	14 to 10		
	⏚	10 <1>	14 to 10		
2A0018	R/L1, S/L2, T/L3	10	12 to 10	M4	1.2 to 1.5 (10.6 to 13.3)
	U/T1, V/T2, W/T3	10	14 to 10		
	⊖, ⊕1, ⊕2	–	14 to 10		
	B1, B2	–	14 to 10		
	⏚	10 <1>	14 to 10		
2A0021	R/L1, S/L2, T/L3	10	12 to 10	M4	1.2 to 1.5 (10.6 to 13.3)
	U/T1, V/T2, W/T3	10	12 to 10		
	⊖, ⊕1, ⊕2	–	12 to 10		
	B1, B2	–	14 to 10		
	⏚	10 <1>	12 to 10		

Drive Model	Terminal	Recomm. Gauge AWG, kcmil	Wire Range AWG, kcmil	Screw Size	Tightening Torque N·m (lb.in.)
2A0030	R/L1, S/L2, T/L3	8	10 to 6	M4	2.1 to 2.3 (18.6 to 20.4)
	U/T1, V/T2, W/T3	8	10 to 6		
	⊖, ⊕1, ⊕2	–	10 to 6		
	B1, B2	–	14 to 10		
	⏚	8 <2>	10 to 8	M5	2.0 to 2.5 (17.7 to 22.1)
2A0040	R/L1, S/L2, T/L3	6	8 to 6	M4	2.1 to 2.3 (18.6 to 20.4)
	U/T1, V/T2, W/T3	8	8 to 6		
	⊖, ⊕1, ⊕2	–	6		
	B1, B2	–	12 to 10		
	⏚	8 <2>	10 to 8	M5	2.0 to 2.5 (17.7 to 22.1)
2A0056	R/L1, S/L2, T/L3	4	6 to 4	M6	5.4 to 6.0 (47.8 to 53.1)
	U/T1, V/T2, W/T3	4	6 to 4		
	⊖, ⊕1, ⊕2	–	6 to 4		
	B1, B2	–	10 to 6	M5	2.7 to 3.0 (23.9 to 26.6)
	⏚	6	8 to 6	M6	5.4 to 6.0 (47.8 to 53.1)
2A0069	R/L1, S/L2, T/L3	3	4 to 3	M8	9.9 to 11.0 (87.6 to 97.4)
	U/T1, V/T2, W/T3	3	4 to 3		
	⊖, ⊕1, ⊕2	–	4 to 3		
	B1, B2	–	8 to 6	M5	2.7 to 3.0 (23.9 to 26.6)
	⏚	6	6 to 4	M6	5.4 to 6.0 (47.8 to 53.1)
2A0081	R/L1, S/L2, T/L3	2	3 to 2	M8	9.9 to 11.0 (87.6 to 97.4)
	U/T1, V/T2, W/T3	2	3 to 2		
	⊖, ⊕1, ⊕2	–	3 to 2		
	B1, B2	–	6	M5	2.7 to 3.0 (23.9 to 26.6)
	⏚	6	6 to 4	M6	5.4 to 6.0 (47.8 to 53.1)
2A0110	R/L1, S/L2, T/L3	1/0	3 to 1/0	M8	9 to 11 (79.7 to 97.4)
	U/T1, V/T2, W/T3	1/0	3 to 1/0		
	⊖, ⊕1	–	2 to 1/0		
	B1, B2	–	6 to 1/0		
	⏚	6	6 to 4		
2A0138	R/L1, S/L2, T/L3	2/0	1 to 2/0	M10	18 to 23 (159 to 204)
	U/T1, V/T2, W/T3	2/0	1 to 2/0		
	⊖, ⊕1	–	1/0 to 3/0		
	B1, B2	–	4 to 2/0		
	⏚	4	4	M8	9 to 11 (79.7 to 97.4)
2A0169	R/L1, S/L2, T/L3	4/0	2/0 to 4/0	M10	18 to 23 (159 to 204)
	U/T1, V/T2, W/T3	4/0	3/0 to 4/0		
	⊖, ⊕1	–	1 to 4/0		
	⊕3	–	1/0 to 4/0		
	⏚	4	4 to 2		
2A0211	R/L1, S/L2, T/L3	1/0 × 2P	1/0 to 2/0	M10	18 to 23 (159 to 204)
	U/T1, V/T2, W/T3	1/0 × 2P	1/0 to 2/0		
	⊖, ⊕1	–	1 to 4/0		
	⊕3	–	1/0 to 4/0		
	⏚	4	4 to 1/0		

Drive Model	Terminal	Recomm. Gauge AWG, kcmil	Wire Range AWG, kcmil	Screw Size	Tightening Torque N·m (lb.in.)
2A0250	R/L1, S/L2, T/L3	3/0 × 2P	3/0 to 300	M12	32 to 40 (283 to 354)
	U/T1, V/T2, W/T3	3/0 × 2P	3/0 to 300		
	⊖, ⊕1	–	3/0 to 300		
	⊕3	–	2 to 300	M10	18 to 23 (159 to 204)
	⏚	3	3 to 300	M12	32 to 40 (283 to 354)
2A0312	R/L1, S/L2, T/L3	4/0 × 2P	3/0 to 300	M12	32 to 40 (283 to 354)
	U/T1, V/T2, W/T3	3/0 × 2P	3/0 to 300		
	⊖, ⊕1	–	3/0 to 300		
	⊕3	–	3/0 to 300	M10	18 to 23 (159 to 204)
	⏚	2	2 to 300	M12	32 to 40 (283 to 354)
2A0360	R/L1, S/L2, T/L3	250 × 2P	4/0 to 600	M12	32 to 40 (283 to 354)
	U/T1, V/T2, W/T3	4/0 × 2P	4/0 to 600		
	⊖, ⊕1	–	250 to 600		
	⊕3	–	3/0 to 600	M10	18 to 23 (159 to 204)
	⏚	1	1 to 350	M12	32 to 40 (283 to 354)
2A0415	R/L1, S/L2, T/L3	350 × 2P	250 to 600	M12	32 to 40 (283 to 354)
	U/T1, V/T2, W/T3	300 × 2P	300 to 600		
	⊖, ⊕1	–	300 to 600		
	⊕3	–	3/0 to 600	M10	18 to 23 (159 to 204)
	⏚	1	1 to 350	M12	32 to 40 (283 to 354)

<1> Install a GFCI when using this wire gauge in accordance with IEC/EN 61800-5-1.

<2> Install a GFCI, or use 10 mm^2 (AWG 8) copper wire when using this wire gauge in accordance with IEC/EN 61800-5-1.

Note: When connecting peripheral devices or options to terminals ⊖, ⊕1, ⊕3, B1, and B2, refer to the instruction manual for each device. For more information, contact Yaskawa or your nearest sales representative.

■ Three-Phase 400 V Class

Table 3.4 Wire Gauge and Torque Specifications (Three-Phase 400 V Class)

Drive Model	Terminal	Recomm. Gauge AWG, kcmil	Wire Range AWG, kcmil	Screw Size	Tightening Torque N·m (lb.in.)
4A0002 4A0004	R/L1, S/L2, T/L3	14	14 to 10	M4	1.2 to 1.5 (10.6 to 13.3)
	U/T1, V/T2, W/T3	14	14 to 10		
	⊖, ⊕1, ⊕2	–	14 to 10		
	B1, B2	–	14 to 10		
	⏚	12 <1>	14 to 12		
4A0005 4A0007 4A0009	R/L1, S/L2, T/L3	14	14 to 10	M4	1.2 to 1.5 (10.6 to 13.3)
	U/T1, V/T2, W/T3	14	14 to 10		
	⊖, ⊕1, ⊕2	–	14 to 10		
	B1, B2	–	14 to 10		
	⏚	10 <1>	14 to 10		
4A0011	R/L1, S/L2, T/L3	12	14 to 10	M4	1.2 to 1.5 (10.6 to 13.3)
	U/T1, V/T2, W/T3	14	14 to 10		
	⊖, ⊕1, ⊕2	–	14 to 10		
	B1, B2	–	14 to 10		
	⏚	10 <1>	14 to 10		

Drive Model	Terminal	Recomm. Gauge AWG, kcmil	Wire Range AWG, kcmil	Screw Size	Tightening Torque N·m (lb.in.)
4A0018	R/L1, S/L2, T/L3	10	12 to 6	M4	2.1 to 2.3 (18.6 to 20.4)
	U/T1, V/T2, W/T3	10	12 to 6		
	⊖, ⊕1, ⊕2	–	12 to 6		
	B1, B2	–	12 to 10		
	⏚	10 <1>	14 to 10	M5	2.0 to 2.5 (17.7 to 22.1)
4A0023	R/L1, S/L2, T/L3	10	10 to 6	M4	2.1 to 2.3 (18.6 to 20.4)
	U/T1, V/T2, W/T3	10	10 to 6		
	⊖, ⊕1, ⊕2	–	12 to 6		
	B1, B2	–	12 to 10		
	⏚	10 <1>	12 to 10	M5	2.0 to 2.5 (17.7 to 22.1)
4A0031	R/L1, S/L2, T/L3	8	8 to 6	M5	3.6 to 4.0 (31.8 to 35.4)
	U/T1, V/T2, W/T3	8	10 to 6		
	⊖, ⊕1, ⊕2	–	10 to 6		
	B1, B2	–	10 to 8		2.7 to 3.0 (23.9 to 26.6)
	⏚	8 <2>	10 to 8	M6	5.4 to 6.0 (47.8 to 53.1)
4A0038	R/L1, S/L2, T/L3	6	8 to 6	M5	3.6 to 4.0 (31.8 to 35.4)
	U/T1, V/T2, W/T3	8	8 to 6		
	⊖, ⊕1, ⊕2	–	6		
	B1, B2	–	10 to 8		2.7 to 3.0 (23.9 to 26.6)
	⏚	6	10 to 6	M6	5.4 to 6.0 (47.8 to 53.1)
4A0044	R/L1, S/L2, T/L3	6	6 to 4	M6	5.4 to 6.0 (47.8 to 53.1)
	U/T1, V/T2, W/T3	6	6 to 4		
	⊖, ⊕1, ⊕2	–	6 to 4		
	B1, B2	–	10 to 8	M5	2.7 to 3.0 (23.9 to 26.6)
	⏚	6	8 to 6	M6	5.4 to 6.0 (47.8 to 53.1)
4A0058	R/L1, S/L2, T/L3	4	6 to 4	M8	9 to 11 (79.7 to 97.4)
	U/T1, V/T2, W/T3	4	6 to 4		
	⊖, ⊕1	–	6 to 1		
	B1, B2	–	8 to 4		
	⏚	6	8 to 6		
4A0072	R/L1, S/L2, T/L3	3	4 to 3	M8	9 to 11 (79.7 to 97.4)
	U/T1, V/T2, W/T3	3	4 to 3		
	⊖, ⊕1	–	4 to 1		
	B1, B2	–	6 to 3		
	⏚	6	6		
4A0088	R/L1, S/L2, T/L3	2	3 to 1/0	M8	9 to 11 (79.7 to 97.4)
	U/T1, V/T2, W/T3	2	3 to 1/0		
	⊖, ⊕1	–	3 to 1/0		
	⊕3	–	6 to 1/0		
	⏚	4	6 to 4		
4A0103	R/L1, S/L2, T/L3	1/0	2 to 1/0	M8	9 to 11 (79.7 to 97.4)
	U/T1, V/T2, W/T3	1	2 to 1/0		
	⊖, ⊕1	–	3 to 1/0		
	⊕3	–	4 to 1/0		
	⏚	4	6 to 4		

Drive Model	Terminal	Recomm. Gauge AWG, kcmil	Wire Range AWG, kcmil	Screw Size	Tightening Torque N·m (lb.in.)
4A0139	R/L1, S/L2, T/L3	3/0	1/0 to 4/0	M10	18 to 23 (159 to 204)
	U/T1, V/T2, W/T3	2/0	1/0 to 4/0		
	⊖, ⊕1	–	1/0 to 4/0		
	⊕3	–	3 to 4/0		
	⏚	4	4		
4A0165	R/L1, S/L2, T/L3	4/0	3/0 to 4/0	M10	18 to 23 (159 to 204)
	U/T1, V/T2, W/T3	4/0	3/0 to 4/0		
	⊖, ⊕1	–	1 to 4/0		
	⊕3	–	1/0 to 4/0		
	⏚	4	4 to 2		
4A0208	R/L1, S/L2, T/L3	300	2 to 300	M10	18 to 23 (159 to 204)
	U/T1, V/T2, W/T3	300	2 to 300		
	⊖, ⊕1	–	1 to 250		
	⊕3	–	3 to 3/0		
	⏚	4	4 to 300		
4A0250	R/L1, S/L2, T/L3	400	1 to 600	M10	18 to 23 (159 to 204)
	U/T1, V/T2, W/T3	400	1/0 to 600		
	⊖, ⊕1	–	3/0 to 600		
	⊕3	–	1 to 325		
	⏚	2	2 to 350		
4A0296	R/L1, S/L2, T/L3	500	2/0 to 600	M12	32 to 40 (283 to 354)
	U/T1, V/T2, W/T3	500	2/0 to 600		
	⊖, ⊕1	–	3/0 to 600		
	⊕3	–	1 to 325	M10	18 to 23 (159 to 204)
	⏚	2	2 to 350	M12	32 to 40 (283 to 354)
4A0362	R/L1, S/L2, T/L3	4/0 × 2P	3/0 to 600	M12	32 to 40 (283 to 354)
	U/T1, V/T2, W/T3	4/0 × 2P	3/0 to 600		
	⊖, ⊕1	–	4/0 to 600		
	⊕3	–	3/0 to 600	M10	18 to 23 (159 to 204)
	⏚	1	1 to 350	M12	32 to 40 (283 to 354)
4A0414	R/L1, S/L2, T/L3	300 × 2P	4/0 to 300	M12	32 to 40 (283 to 354)
	U/T1, V/T2, W/T3	300 × 2P	4/0 to 300		
	⊖, ⊕1	–	3/0 to 300		
	⊕3	–	3/0 to 300		
	⏚	1	1 to 3/0		
4A0515	R/L1, S/L2, T/L3	3/0 × 4P	3/0 to 300	M12	32 to 40 (283 to 354)
	U/T1, V/T2, W/T3	4/0 × 4P	3/0 to 300		
	⊖, ⊕1	–	1/0 to 300		
	⊕3	–	1/0 to 300		
	⏚	1/0	1/0 to 300		
4A0675	R/L1, S/L2, T/L3	300 × 4P	4/0 to 300	M12	32 to 40 (283 to 354)
	U/T1, V/T2, W/T3	300 × 4P	4/0 to 300		
	⊖, ⊕1	–	1/0 to 300		
	⊕3	–	1/0 to 300		
	⏚	2/0	2/0 to 300		

Drive Model	Terminal	Recomm. Gauge AWG, kcmil	Wire Range AWG, kcmil	Screw Size	Tightening Torque N·m (lb.in.)
4A0930	R/L1, S/L2, T/L3, R1/L11, S1/L21, T1/L31	4/0 × 4P×2	3/0 to 300	M12	32 to 40 (283 to 354)
	U/T1, V/T2, W/T3	4/0 × 4P×2	3/0 to 300		
	⊖, ⊕1	–	4/0 to 300		
	⊕3	–	4/0 to 300		
	⏚	3/0	3/0 to 250		
4A1200	R/L1, S/L2, T/L3, R1/L11, S1/L21, T1/L31	300 × 4P×2	4/0 to 300	M12	32 to 40 (283 to 354)
	U/T1, V/T2, W/T3	300 × 4P×2	4/0 to 300		
	⊖, ⊕1	–	250 to 300		
	⊕3	–	4/0 to 300		
	⏚	4/0	4/0 to 250		

<1> Install a GFCI when using this wire gauge in accordance with IEC/EN 61800-5-1.

<2> Install a GFCI or use 10 mm ^{2} (AWG 8) copper wire when using this wire gauge in accordance with IEC/EN 61800-5-1.

Note: When connecting peripheral devices or options to terminals ⊖, ⊕1, ⊕3, B1, and B2, refer to the instruction manual for each device. For more information, contact Yaskawa or your nearest sales representative.

■ Three-Phase 600 V Class

Table 3.5 Wire Gauge and Torque Specifications (Three-Phase 600 V Class)

Drive Model	Terminal	Recomm. Gauge mm^2 (AWG, kcmil)	Wire Range mm^2 (AWG, kcmil)	Screw Size	Tightening Torque N·m (lb.in.)
5A0003 5A0004 5A0006	R/L1, S/L2, T/L3	2.5 (14)	2.5 to 6.0 (14 to 10)	M4	1.2 to 1.5 (10.6 to 13.3)
	U/T1, V/T2, W/T3	2.5 (14)	2.5 to 6.0 (14 to 10)		
	⊖, ⊕1, ⊕2	–	2.5 to 6.0 (14 to 10)		
	B1, B2	–	2.5 to 6.0 (14 to 10)		
	⏚	6.0 (10)	2.5 to 6.0 (14 to 10)		
5A0009	R/L1, S/L2, T/L3	2.5 (14)	2.5 to 6.0 (14 to 10)	M4	1.2 to 1.5 (10.6 to 13.3)
	U/T1, V/T2, W/T3	2.5 (14)	2.5 to 6.0 (14 to 10)		
	⊖, ⊕1, ⊕2	–	2.5 to 6.0 (14 to 10)		
	B1, B2	–	2.5 to 6.0 (14 to 10)		
	⏚	6.0 (10)	4.0 to 6.0 (12 to 10)		
5A0011	R/L1, S/L2, T/L3	6.0 (10)	2.5 to 16 (14 to 6)	M4	2.1 to 2.3 (18.6 to 20.4)
	U/T1, V/T2, W/T3	2.5 (14)	2.5 to 16 (14 to 6)		
	⊖, ⊕1, ⊕2	–	2.5 to 16 (14 to 6)		
	B1, B2	–	2.5 to 6.0 (14 to 10)		
	⏚	10 (8)	4.0 to 6.0 (12 to 8)	M5	2.0 to 2.5 (17.7 to 22.1)

Drive Model	Terminal	Recomm. Gauge mm² (AWG, kcmil)	Wire Range mm² (AWG, kcmil)	Screw Size	Tightening Torque N·m (lb.in.)
5A0017	R/L1, S/L2, T/L3	6.0 (10)	6.0 to 16 (10 to 6)	M5	3.6 to 4.0 (31.8 to 35.4)
	U/T1, V/T2, W/T3	6.0 (10)	6.0 to 16 (10 to 6)		
	⊖, ⊕1, ⊕2	–	6.0 to 16 (10 to 6)		
	B1, B2	–	6.0 to 10 (10 to 8)		2.7 to 3.0 (23.9 to 26.6)
	⏚	10 (8)	6.0 to 10 (12 to 8)	M6	5.4 to 6.0 (47.8 to 53.1)
5A0022	R/L1, S/L2, T/L3	10 (8)	6.0 to 16 (10 to 6)	M5	3.6 to 4.0 (31.8 to 35.4)
	U/T1, V/T2, W/T3	6.0 (10)	6.0 to 16 (10 to 6)		
	⊖, ⊕1, ⊕2	–	6.0 to 16 (10 to 6)		
	B1, B2	–	6.0 to 10 (10 to 8)		2.7 to 3.0 (23.9 to 26.6)
	⏚	10 (8)	6.0 to 10 (10 to 6)	M6	5.4 to 6.0 (47.8 to 53.1)
5A0027 5A0032	R/L1, S/L2, T/L3	16 (6)	16 to 25 (6 to 4)	M6	5.4 to 6.0 (47.8 to 53.1)
	U/T1, V/T2, W/T3	16 (6)	16 to 25 (6 to 4)		
	⊖, ⊕1, ⊕2	–	16 to 25 (6 to 4)		
	B1, B2	–	6.0 to 10 (10 to 8)	M5	2.7 to 3.0 (23.9 to 26.6)
	⏚	16 (6)	10 to 16 (10 to 6)	M6	5.4 to 6.0 (47.8 to 53.1)
5A0041	R/L1, S/L2, T/L3	16 (6)	6.0 to 25 (10 to 3)	M8	9.0 to 11 (79.7 to 97.4)
	U/T1, V/T2, W/T3	16 (6)	6.0 to 25 (10 to 3)		
	⊖, ⊕1	–	(6 to 1)		
	B1, B2	–	4.0 to 25 (12 to 3)		
	⏚	16 (6)	10 to 16 (6)		
5A0052	R/L1, S/L2, T/L3	25 (4)	6.0 to 25 (10 to 3)	M8	9.0 to 11 (79.7 to 97.4)
	U/T1, V/T2, W/T3	16 (6)	6.0 to 25 (10 to 3)		
	⊖, ⊕1	–	16 to 35 (6 to 1)		
	B1, B2	–	10 to 25 (8 to 3)		
	⏚	16 (6)	10 to 16 (6)		
5A0062	R/L1, S/L2, T/L3	25 (4)	6.0 to 95 (10 to 4/0)	M10	18 to 23 (159 to 204)
	U/T1, V/T2, W/T3	25 (4)	6.0 to 95 (10 to 4/0)		
	⊖, ⊕1	–	25 to 95 (4 to 4/0)		
	⊕3	–	16 to 95 (6 to 4/0)		
	⏚	25 (4)	25 (4)		

Drive Model	Terminal	Recomm. Gauge mm² (AWG, kcmil)	Wire Range mm² (AWG, kcmil)	Screw Size	Tightening Torque N·m (lb.in.)
5A0077	R/L1, S/L2, T/L3	25 (3)	6.0 to 95 (10 to 4/0)	M10	18 to 23 (159 to 204)
	U/T1, V/T2, W/T3	25 (3)	6.0 to 95 (10 to 4/0)		
	⊖, ⊕1	–	25 to 95 (3 to 4/0)		
	⊕3	–	16 to 95 (6 to 4/0)		
	⏚	25 (4)	25 (4)		
5A0099	R/L1, S/L2, T/L3	70 (1/0)	6.0 to 95 (10 to 4/0)	M10	18 to 23 (159 to 204)
	U/T1, V/T2, W/T3	50 (1)	6.0 to 95 (10 to 4/0)		
	⊖, ⊕1	–	35 to 95 (2 to 4/0)		
	⊕3	–	25 to 95 (4 to 4/0)		
	⏚	25 (4)	25 (4)		
5A0125	R/L1, S/L2, T/L3	70 (2/0)	35 to 150 (1 to 300)	M10	18 to 23 (159 to 204)
	U/T1, V/T2, W/T3	70 (2/0)	35 to 150 (1 to 300)		
	⊖, ⊕1	–	70 (2/0 to 3/0)		
	⊕3	–	35 to 50 (1 to 1/0)		
	⏚	35 (3)	35 to 150 (3 to 300)		
5A0145	R/L1, S/L2, T/L3	95 (3/0)	95 to 150 (2/0 to 300)	M10	18 to 23 (159 to 204)
	U/T1, V/T2, W/T3	95 (3/0)	95 to 150 (2/0 to 300)		
	⊖, ⊕1	–	70 to 95 (3/0 to 4/0)		
	⊕3	–	70 to 95 (1/0 to 2/0)		
	⏚	35 (3)	35 to 150 (3 to 300)		
5A0192	R/L1, S/L2, T/L3	185 (300)	95 to 300 (2/0 to 600)	M12	32 to 40 (283 to 354)
	U/T1, V/T2, W/T3	150 (250)	95 to 300 (2/0 to 600)		
	⊖, ⊕1	–	95 to 185 (2/0 to 400)		
	⊕3	–	95 to 120 (2/0 to 250)	M10	18 to 23 (159 to 204)
	⏚	50 (1)	35 to 300 (1 to 350)	M12	32 to 40 (283 to 354)
5A0242	R/L1, S/L2, T/L3	240 (400)	95 to 300 (2/0 to 600)	M12	32 to 40 (283 to 354)
	U/T1, V/T2, W/T3	185 (350)	95 to 300 (2/0 to 600)		
	⊖, ⊕1	–	95 to 240 (2/0 to 500)		
	⊕3	–	150 (250 to 300)	M10	18 to 23 (159 to 204)
	⏚	50 (1)	35 to 300 (1 to 350)	M12	32 to 40 (283 to 354)

Note: When connecting peripheral devices or options to terminals ⊖, ⊕1, ⊕3, B1, and B2 , refer to the instruction manual for each device. For more information, contact Yaskawa or your nearest sales representative.

◆ Main Circuit Terminal and Motor Wiring

This section outlines the various steps, precautions, and checkpoints for wiring the main circuit terminals and motor terminals.

WARNING! *Electrical Shock Hazard. Do not connect the AC power line to the output terminals of the drive. Failure to comply could result in death or serious injury by fire as a result of drive damage from line voltage application to output terminals.*

NOTICE: *When connecting the motor to the drive output terminals U/T1, V/T2, and W/T3, the phase order for the drive and motor should match. Failure to comply with proper wiring practices may cause the motor to run in reverse if the phase order is backward.*

NOTICE: *Route motor leads U/T1, V/T2, and W/T3 separate from all other leads to reduce possible interference related issues. Failure to comply may result in abnormal operation of drive and nearby equipment.*

NOTICE: *Do not connect phase-advancing capacitors or LC/RC noise filters to the output circuits. Failure to comply could result in damage to the drive, phase-advancing capacitors, LC/RC noise filters or ground fault circuit interrupters.*

■ Cable Length Between Drive and Motor

Voltage drop along the motor cable may cause reduced motor torque when the wiring between the drive and the motor is too long, especially at low frequency output. This can also be a problem when motors are connected in parallel with a fairly long motor cable. Drive output current will increase as the leakage current from the cable increases. An increase in leakage current may trigger an overcurrent situation and weaken the accuracy of the current detection.

Adjust the drive carrier frequency according to ***Table 3.6***. If the motor wiring distance exceeds 100 m because of the system configuration, reduce the ground currents. ***Refer to C6-02: Carrier Frequency Selection on page 253***.

Table 3.6 Cable Length Between Drive and Motor

Cable Length	50 m or less	100 m or less	Greater than 100 m
Carrier Frequency	15 kHz or less	5 kHz or less	2 kHz or less

Note:
1. When setting carrier frequency for drives running multiple motors, calculate cable length as the total wiring distance to all connected motors.
2. The maximum cable length when using OLV/PM (A1-02 = 5) or AOLV/PM (A1-02 = 6) is 100 m.

■ Ground Wiring

Follow the precautions below when wiring the ground for one drive or a series of drives.

WARNING! *Electrical Shock Hazard. Make sure the protective earthing conductor complies with technical standards and local safety regulations. Because the leakage current exceeds 3.5 mA in models 4A0414 and larger, IEC/EN 61800-5-1 states that either the power supply must be automatically disconnected in case of discontinuity of the protective earthing conductor or a protective earthing conductor with a cross-section of at least 10 mm^2 (Cu) or 16 mm^2 (Al) must be used. Failure to comply may result in death or serious injury.*

WARNING! *Electrical Shock Hazard. Always use a ground wire that complies with technical standards on electrical equipment and minimize the length of the ground wire. Improper equipment grounding may cause dangerous electrical potentials on equipment chassis, which could result in death or serious injury.*

WARNING! *Electrical Shock Hazard. Be sure to ground the drive ground terminal (200 V class: ground to 100 Ω or less; 400 V class: ground to 10 Ω or less; 600 V class: ground to 10 Ω or less). Improper equipment grounding could result in death or serious injury by contacting ungrounded electrical equipment.*

NOTICE: *Do not share the ground wire with other devices such as welding machines or large-current electrical equipment. Improper equipment grounding could result in drive or equipment malfunction due to electrical interference.*

NOTICE: *When using more than one drive, ground multiple drives according to instructions. Improper equipment grounding could result in abnormal operation of drive or equipment.*

Refer to ***Figure 3.26*** when using multiple drives. Do not loop the ground wire.

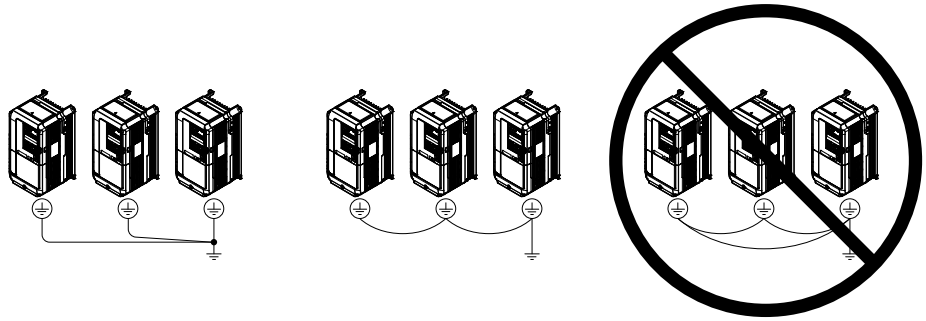

Figure 3.26 Multiple Drive Wiring

■ Wiring the Main Circuit Terminal

WARNING! *Electrical Shock Hazard. Shut off the power supply to the drive before wiring the main circuit terminals. Failure to comply may result in death or serious injury.*

Wire the main circuit terminals after the terminal board has been properly grounded.

Models 2A0004 to 2A0081, 4A0002 to 4A0044, and 5A0003 to 5A0032 have a cover placed over the DC bus and braking circuit terminals prior to shipment to help prevent miswiring. Use wire cutters to cut away covers as needed for terminals.

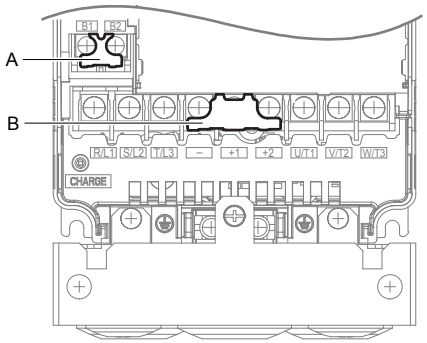

A – Braking circuit protective cover **B – DC bus protective cover**

Figure 3.27 Protecting Cover to Prevent Miswiring (Model 5A0011)

■ Main Circuit Connection Diagram

Refer to Main Circuit Connection Diagram on page 115 when wiring terminals on the main power circuit of the drive.

WARNING! *Fire Hazard. The braking resistor connection terminals are B1 and B2. Do not connect braking resistors to any other terminals. Improper wiring connections could cause the braking resistor to overheat and cause death or serious injury by fire. Failure to comply may result in damage to the braking circuit or drive.*

3.9 Control Circuit Wiring

◆ Control Circuit Connection Diagram

Refer to *Figure 3.1* on page *113* when wiring terminals on the drive control circuit.

◆ Control Circuit Terminal Block Functions

Drive parameters determine which functions apply to the multi-function digital inputs (S1 to S8), multi-function digital outputs (M1 to M6), multi-function analog inputs (A1 to A3), and multi-function analog monitor output (FM, AM). The default setting is listed next to each terminal in *Figure 3.1* on page *113*.

WARNING! *Sudden Movement Hazard. Always check the operation and wiring of control circuits after being wired. Operating a drive with untested control circuits could result in death or serious injury.*

WARNING! *Sudden Movement Hazard. Confirm the drive I/O signals and external sequence before starting test run. Setting parameter A1-06 may change the I/O terminal function automatically from the factory setting.* ***Refer to Application Selection on page 173****. Failure to comply may result in death or serious injury.*

■ Input Terminals

Table 3.7 lists the input terminals on the drive. Text in parenthesis indicates the default setting for each multi-function input.

Table 3.7 Control Circuit Input Terminals

Type	No.	Terminal Name (Function)	Function (Signal Level) Default Setting	Page
Multi-Function Digital Inputs	S1	Multi-function input 1 (Closed: Forward run, Open: Stop)	• Photocoupler • 24 Vdc, 8 mA • *Refer to Sinking/Sourcing Mode for Digital Inputs on page 145*.	*298*
	S2	Multi-function input 2 (Closed: Reverse run, Open: Stop)		
	S3	Multi-function input 3 (External fault, N.O.)		
	S4	Multi-function input 4 (Fault reset)		
	S5	Multi-function input 5 (Multi-step speed reference 1)		
	S6	Multi-function input 6 (Multi-step speed reference 2)		
	S7	Multi-function input 7 (Jog reference)		
	S8	Multi-function input 8 (Baseblock command (N.O.))		
	SC	Multi-function input common	Multi-function input common	
	SP	Digital input power supply +24 Vdc	24 Vdc power supply for digital inputs, 150 mA max (only when not using digital input option DI-A3) **NOTICE:** *Do not jumper or short terminals SP and SN. Failure to comply will damage the drive.*	*145*
	SN	Digital input power supply 0 V		*145*
Safe Disable Inputs	H1	Safe Disable input 1	• 24 Vdc, 8 mA • One or both open: Output disabled • Both closed: Normal operation • Internal impedance: 3.3 kΩ • Off time of at least 1 ms • Disconnect the wire jumpers shorting terminals H1, H2, and HC to use the Safe Disable inputs. Set the S3 jumper to select between sinking, sourcing mode, and the power supply as explained on page *145*.	*768*
	H2	Safe Disable input 2		
	HC	Safe Disable function common	Safe disable function common	

Type	No.	Terminal Name (Function)	Function (Signal Level) Default Setting	Page
Analog Inputs / Pulse Train Input	RP	Multi-function pulse train input (Frequency reference)	• Input frequency range: 0 to 32 kHz • Signal Duty Cycle: 30 to 70% • High level: 3.5 to 13.2 Vdc, low level: 0.0 to 0.8 Vdc • Input impedance: 3 kΩ	206 328
	+V	Power supply for analog inputs	10.5 Vdc (max allowable current 20 mA)	205
	-V	Power supply for analog inputs	-10.5 Vdc (max allowable current 20 mA)	–
	A1	Multi-function analog input 1 (Frequency reference bias)	-10 to 10 Vdc, 0 to 10 Vdc (input impedance: 20 kΩ)	205 320
	A2	Multi-function analog input 2 (Frequency reference bias)	• -10 to 10 Vdc, 0 to 10 Vdc (input impedance: 20 kΩ) • 4 to 20 mA, 0 to 20 mA (input impedance: 250 Ω) • Voltage or current input must be selected by DIP switch S1 and H3-09.	205 322
	A3	Multi-function analog input 3 (Auxiliary frequency reference)/PTC Input	• -10 to 10 Vdc, 0 to 10 Vdc (input impedance: 20 kΩ) • Use DIP switch S4 on the terminal board to select between analog and PTC input.	205
	AC	Frequency reference common	0 V	205
	E (G)	Ground for shielded lines and option cards	–	–

■ Output Terminals

Table 3.8 lists the output terminals on the drive. Text in parenthesis indicates the default setting for each multi-function output.

Table 3.8 Control Circuit Output Terminals

Type	No.	Terminal Name (Function)	Function (Signal Level) Default Setting	Page
Fault Relay Output	MA	N.O. output (Fault)	30 Vdc, 10 mA to 1 A; 250 Vac, 10 mA to 1 A Minimum load: 5 Vdc, 10 mA	309
	MB	N.C. output (Fault)		
	MC	Fault output common		
Multi-Function Digital Output <1>	M1	Multi-function digital output (During run)	30 Vdc, 10 mA to 1 A; 250 Vac, 10 mA to 1 A Minimum load: 5 Vdc, 10 mA	309
	M2			
	M3	Multi-function digital output (Zero speed)		
	M4			
	M5	Multi-function digital output (Speed Agree 1)		
	M6			
Monitor Output	MP	Pulse train output (Output frequency)	32 kHz (max)	328
	FM	Analog monitor output 1 (Output frequency)	-10 to +10 Vdc, 0 to +10 Vdc, or 4 to 20 mA. *Refer to Terminal AM/FM Signal Selection on page 148* for details.	326
	AM	Analog monitor output 2 (Output current)		
	AC	Monitor common	0 V	–
Safety Monitor Output	DM+	Safety monitor output	Outputs status of Safe Disable function. Closed when both Safe Disable channels are closed. Up to +48 Vdc 50 mA	769
	DM-	Safety monitor output		

<1> Refrain from assigning functions to digital relay outputs that involve frequent switching, as doing so may shorten relay performance life. Switching life is estimated at 200,000 times (assumes 1 A, resistive load).

■ Serial Communication Terminals

Table 3.9 Control Circuit Terminals: Serial Communications

Type	No.	Signal Name	Function (Signal Level)	
MEMOBUS/Modbus Communication <1>	R+	Communications input (+)	MEMOBUS/Modbus communication: Use an RS-422 or RS-485 cable to connect the drive.	RS-422/RS-485 MEMOBUS/Modbus communication protocol 115.2 kbps (max.)
	R-	Communications input (-)		
	S+	Communications output (+)		
	S-	Communications output (-)		
	IG	Shield ground	0 V	

<1> Enable the termination resistor in the last drive in a MEMOBUS/Modbus network by setting DIP switch S2 to the ON position. Refer to the manual section on ***Control I/O Connections*** for more information.

◆ Terminal Configuration

The control circuit terminals should be arranged as shown in *Figure 3.28*.

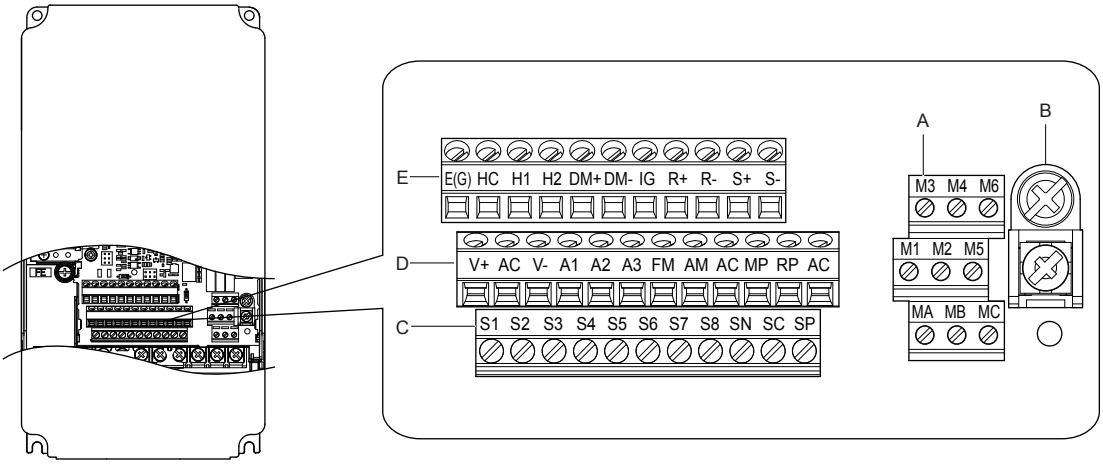

A – Terminal Block (TB 2)
B – Terminal Block (TB 5)
C – Terminal Block (TB 1)
D – Terminal Block (TB 3)
E – Terminal Block (TB 4)

Figure 3.28 Control Circuit Terminal Arrangement

■ Wire Size and Torque Specifications

Select appropriate wire type and gauges from *Table 3.10*. For simpler and more reliable wiring, use crimp ferrules on the wire ends.

Refer to *Table 3.11* for ferrule terminal types and sizes.

Table 3.10 Wire Gauges

Terminal Block	Terminal	Screw Size	Tightening Torque N•m (lb. in)	Bare Wire Terminal		Ferrule-Type Terminal		Wire Type
				Recomm. wire size mm² (AWG)	Applicable wire size mm² (AWG)	Recomm. wire size mm² (AWG)	Applicable wire size mm² (AWG)	
TB1, TB2, TB3, TB4	S1-S8, SN, SC, SP, MA, MB, MC, M1-M6, V+, V-, AC, A1, A2, FM, AM, P1, P2, C1, C2, HC, H1, H2, DM+, DM-, IG, R+, R-, S+, S-	M3	0.5 to 0.6 (4.4 to 5.3)	0.75 (18)	Stranded wire: 0.2 to 1.0 (24 to 17) Solid wire: 0.2 to 1.5 (24 to 16)	0.5 (20)	0.25 to 0.5 (24 to 20)	Shielded wire, etc.
	E(G)			1.0 (16)				
TB5	E(G)	M3.5	0.5 to 1.0 (4.4 to 8.9)	1.25 (12)	0.5 to 2 (20 to 14)	–	–	

■ Ferrule-Type Wire Terminals

Yaskawa recommends using CRIMPFOX 6, a crimping tool manufactured by PHOENIX CONTACT, to prepare wire ends with insulated sleeves before connecting to the drive. See *Table 3.11* for dimensions.

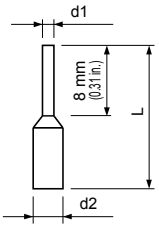

Figure 3.29 Ferrule Dimensions

Table 3.11 Ferrule Terminal Types and Sizes

Size mm² (AWG)	Type	L mm (in)	d1 mm (in)	d2 mm (in)	Manufacturer
0.25 (24)	AI 0.25-8YE	12.5 (0.49)	0.8 (0.03)	2.0 (0.08)	PHOENIX CONTACT
0.34 (22)	AI 0.34-8TQ	12.5 (0.49)	0.8 (0.03)	2.0 (0.08)	
0.5 (20)	AI 0.5-8WH AI 0.5-8OG	14.0 (0.55)	1.1 (0.04)	2.5 (0.10)	

◆ Wiring the Control Circuit Terminal

This section describes the proper procedures and preparations for wiring the control terminals.

WARNING! *Electrical Shock Hazard. Do not remove covers or touch the circuit boards while the power is on. Failure to comply could result in death or serious injury.*

NOTICE: *Separate control circuit wiring from main circuit wiring (terminals R/L1, S/L2, T/L3, B1, B2, U/T1, V/T2, W/T3, ⊖, ⊕1, ⊕2) and other high-power lines. Improper wiring practices could result in drive malfunction due to electrical interference.*

NOTICE: *Separate wiring for digital output terminals MA, MB, MC, and M1 to M6 from wiring to other control circuit lines. Improper wiring practices could result in drive or equipment malfunction or nuisance trips.*

NOTICE: *Use a class 2 power supply when connecting to the control terminals. Improper application of peripheral devices could result in drive performance degradation due to improper power supply. Refer to NEC Article 725 Class 1, Class 2, and Class 3 Remote-Control, Signaling, and Power Limited Circuits for requirements concerning class 2 power supplies.*

NOTICE: *Insulate shields with tape or shrink tubing to prevent contact with other signal lines and equipment. Improper wiring practices could result in drive or equipment malfunction due to short circuit.*

NOTICE: *Connect the shield of shielded cable to the appropriate ground terminal. Improper equipment grounding could result in drive or equipment malfunction or nuisance trips.*

NOTICE: *Do not tighten screws beyond the specified tightening torque. Failure to comply may result in erroneous operation, damage to the terminal block, or cause a fire.*

NOTICE: *Use shielded twisted-pair cables as indicated to prevent operating faults. Improper wiring practices could result in drive or equipment malfunction due to electrical interference.*

Wire the control circuit only after terminals have been properly grounded and main circuit wiring is complete. *Refer to Terminal Board Wiring Guide on page 143* for details. Prepare the ends of the control circuit wiring as shown in *Figure 3.32*. *Refer to Wire Gauges on page 141*.

Connect control wires as shown in *Figure 3.30* and *Figure 3.31*.

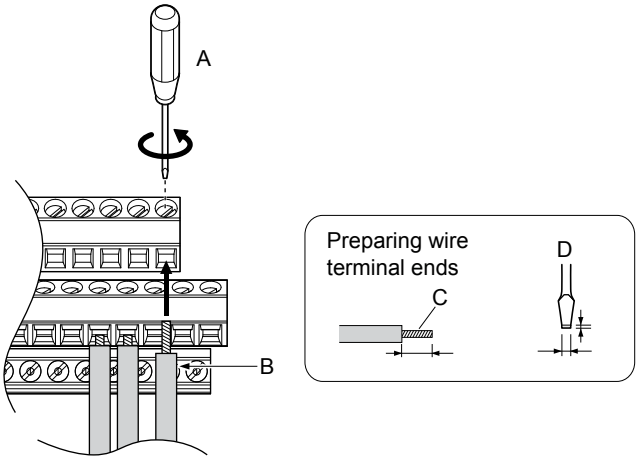

A – Loosen screw to insert wire.
B – Single wire or stranded wire
C – Avoid fraying wire strands when stripping insulation from wire. Strip length 5.5 mm.
D – Blade depth of 0.4 mm or less Blade width of 2.5 mm or less

Figure 3.30 Terminal Board Wiring Guide

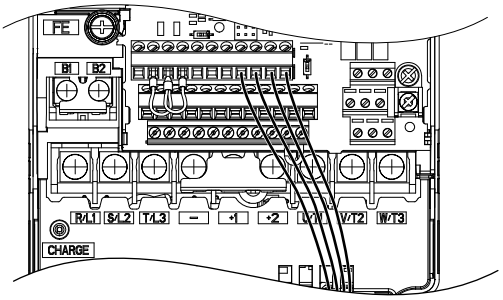

Figure 3.31 Terminal Board Location Inside the Drive

When setting the frequency by analog reference from an external potentiometer, use shielded twisted-pair wires (preparing wire ends as shown in ***Figure 3.32***) and connect the shield to the ground terminal of the drive.

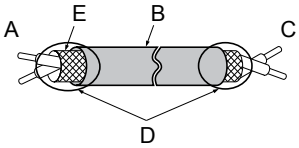

A – Drive side
B – Insulation
C – Control device side
D – Shield sheath (insulate with tape)
E – Shield

Figure 3.32 Preparing the Ends of Shielded Cables

NOTICE: *The analog signal wiring between the drive and the operator station or peripheral equipment should not exceed 50 meters when using an analog signal from a remote source to supply the frequency reference. Failure to comply could result in poor system performance.*

◆ Switches and Jumpers on the Terminal Board

The terminal board is equipped with several switches used to adapt the drive I/Os to the external control signals. ***Figure 3.33*** shows the location of these switches. ***Refer to Control I/O Connections on page 145*** for setting instructions.

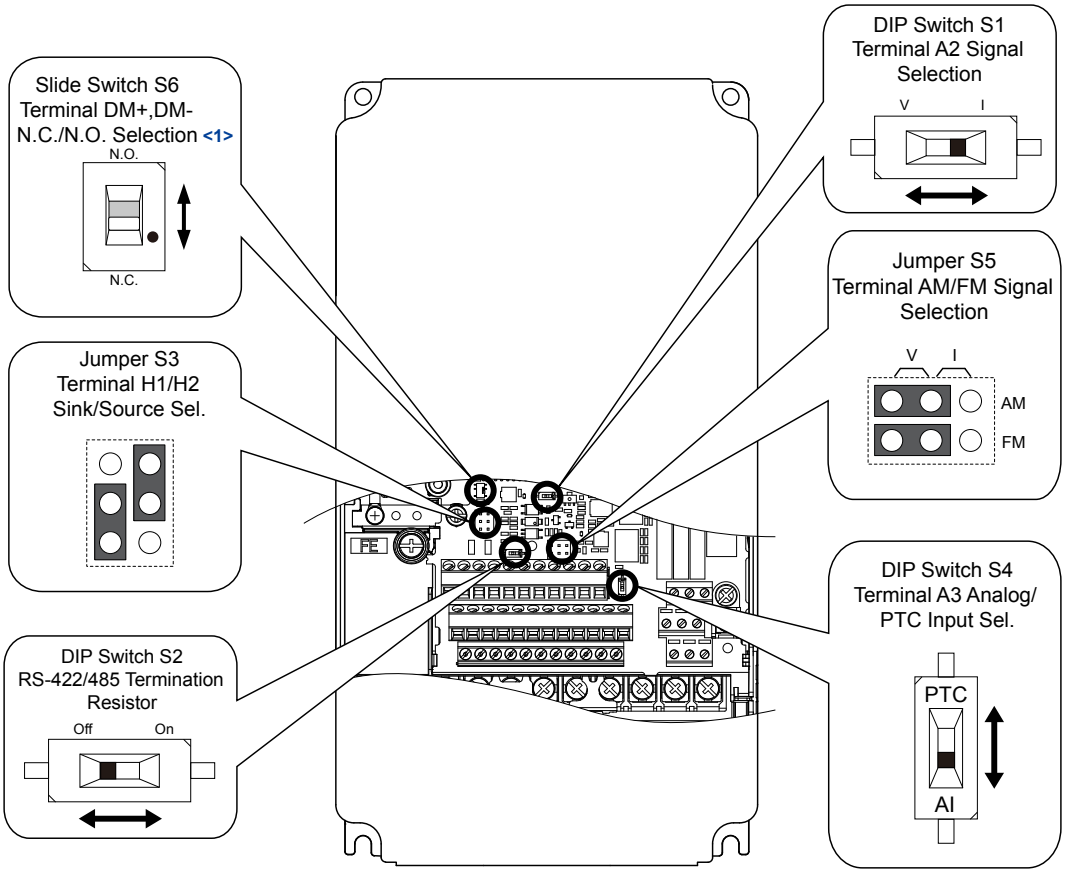

Figure 3.33 Locations of Jumpers and Switches on the Terminal Board

<1> Slide switch S6 selects N.C. or N.O. as the state of the DM+ and DM- terminals for EDM output. Slide switch S6 is available on removable terminal circuit boards ETC740300, ETC740301 and later.

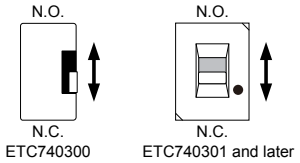

3.10 Control I/O Connections

◆ Sinking/Sourcing Mode for Digital Inputs

Use the wire jumper between terminals SC and SP or SC and SN to select between Sink mode, Source mode or external power supply for the digital inputs S1 to S8 as shown in *Table 3.12* (Default: Sink mode, internal power supply).

NOTICE: *Do not short terminals SP and SN. Failure to comply will damage the drive.*

Table 3.12 Digital Input Sink/Source/External Power Supply Selection

Mode	Drive Internal Power Supply (Terminals SN and SP)	External 24 Vdc Power Supply
Sinking Mode (NPN)	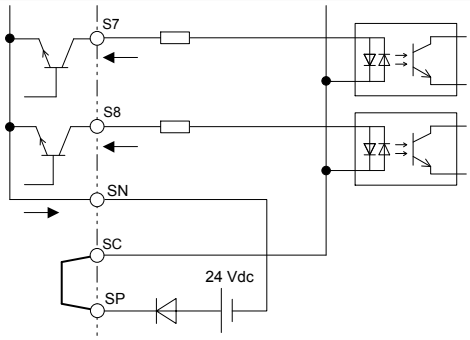	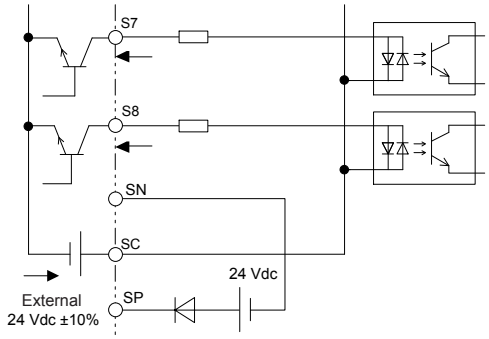
Sourcing Mode (PNP)	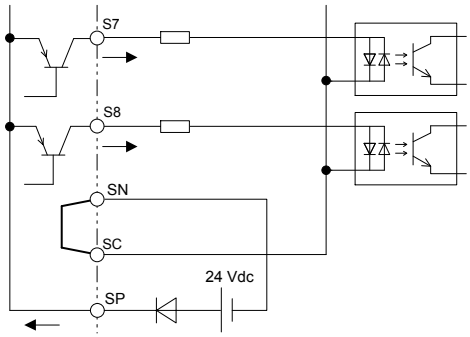	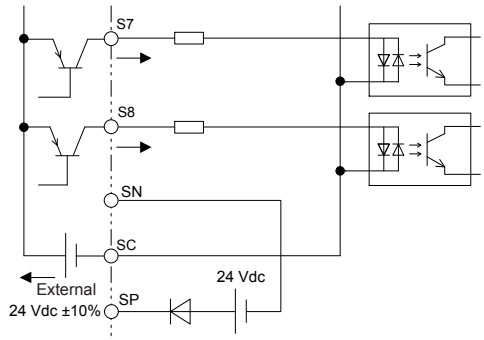

◆ Sinking/Sourcing Mode Selection for Safe Disable Inputs

Use jumper S3 on the terminal board to select between Sink mode, Source mode or external power supply for the Safe Disable inputs H1 and H2 as shown in ***Table 3.12*** (Default: Source mode, internal power supply). ***Refer to Switches and Jumpers on the Terminal Board on page 144*** for locating jumper S3.

Remove the jumper wire connected to the HC terminals and connect terminals H1 and H2 as shown in ***Table 3.13*** to use an external power supply for a sequence input without using a safety input.

WARNING! *Electrical Shock Hazard. Be sure to remove the jumper wire connected to the HC terminals if using en external power supply for a sequence input without using a safety input. Failure to comply will short circuit the external power supply.*

Table 3.13 Safe Disable Input Sink/Source/External Power Supply Selection

Mode	Drive Internal Power Supply	External 24 Vdc Power Supply
Sinking Mode	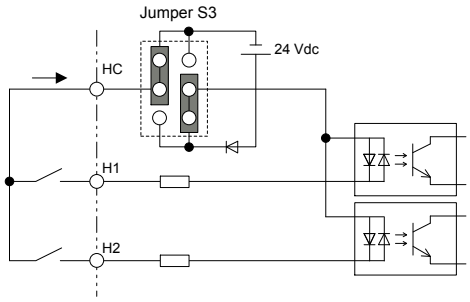	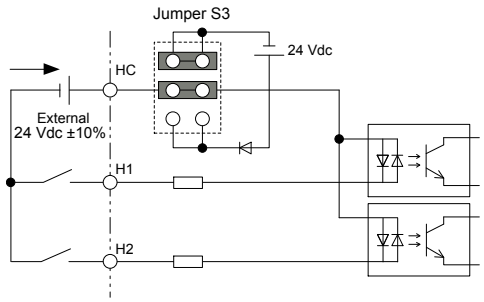
Sourcing Mode	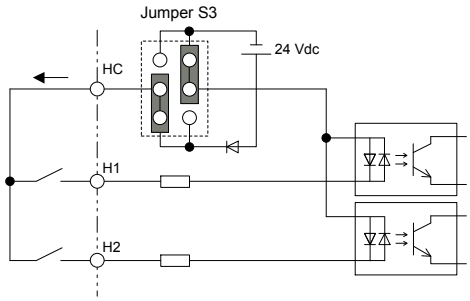	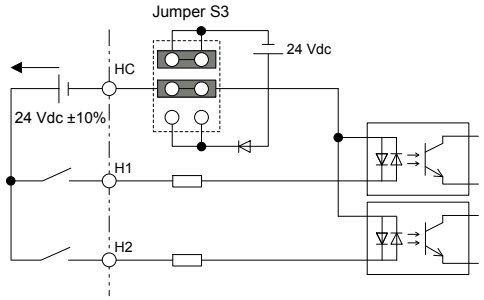

◆ Using the Pulse Train Output

The pulse train output terminal MP can supply power or be used with an external power supply.

NOTICE: *Connect peripheral devices in accordance with the specifications. Failure to comply may cause unexpected drive operation, and can damage the drive or connected circuits.*

■ Using Power from the Pulse Output Terminal (Source Mode)

The high voltage level of the pulse output terminal depends on the load impedance.

Load Impedance R_L (kΩ)	Output Voltage V_{MP} (V) (insulated)
1.5 kΩ	5 V
4 kΩ	8 V
10 kΩ	10 V

Note: The load resistance needed in order to get a certain high level voltage V_{MP} can be calculated by: $R_L = V_{MP} \cdot 2 / (12 - V_{MP})$

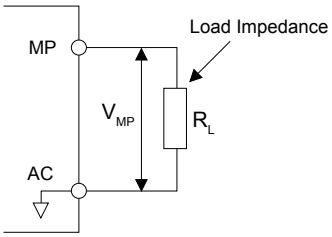

Figure 3.34 Pulse Output Connection Using Internal Voltage Supply

■ Using External Power Supply (Sink Mode)

The high voltage level of the pulse output signal depends on the external voltage applied. The voltage must be between 12 and 15 Vdc. The load resistance must be adjusted so that the current is lower than 16 mA.

External Power Supply (V)	Load Impedance (kΩ)
12 to 15 Vdc ±10%	1.0 kΩ or higher

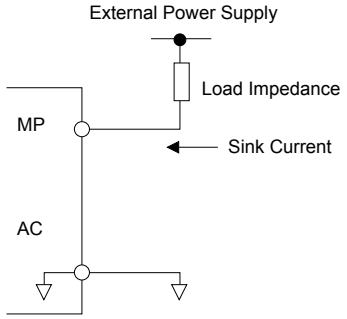

Figure 3.35 Pulse Output Connection Using External Voltage Supply

◆ Terminal A2 Input Signal Selection

Terminal A2 can be used to input either a voltage or a current signal. Select the signal type using switch S1 as explained in ***Table 3.14***. Set parameter H3-09 accordingly as shown in ***Table 3.15***. ***Refer to Switches and Jumpers on the Terminal Board on page 144*** for locating switch S1.

Note: If terminals A1 and A2 are both set for frequency bias (H3-02 = 0 and H3-10 = 0), both input values will be combined to create the frequency reference.

Table 3.14 DIP Switch S1 Settings

Setting	Description
V (left position)	Voltage input (-10 to +10 V or 0 to 10 V)
I (right position)	Current input (4 to 20 mA or 0 to 20 mA): default setting

Table 3.15 Parameter H3-09 Details

No.	Parameter Name	Description	Setting Range	Default Setting
H3-09	Terminal A2 Signal Level Selection	Selects the signal level for terminal A2. 0: 0 to 10 Vdc 1: -10 to 10 Vdc 2: 4 to 20 mA 3: 0 to 20 mA	0 to 3	2

◆ Terminal A3 Analog/PTC Input Selection

Terminal A3 can be configured either as multi-function analog input or as PTC input for motor thermal overload protection. Use switch S4 to select the input function as described in ***Table 3.16***. ***Refer to Switches and Jumpers on the Terminal Board on page 144*** for locating switch S4.

Table 3.16 DIP Switch S4 Settings

Setting	Description
AI (lower position) (default)	Analog input for the function selected in parameter H3-06
PTC (upper position)	PTC input. Parameter H3-06 must be set to E (PTC input)

◆ Terminal AM/FM Signal Selection

The signal type for terminals AM and FM can be set to either voltage or current output using jumper S5 on the terminal board as explained in ***Table 3.17***. When changing the setting of jumper S5, parameters H4-07 and H4-08 must be set accordingly. The default selection is voltage output for both terminals. ***Refer to Switches and Jumpers on the Terminal Board on page 144*** for locating jumper S5.

Table 3.17 Jumper S5 Settings

Terminal	Voltage Output	Current Output
Terminal AM		
Terminal FM		

Table 3.18 Parameter H4-07 and H4-08 Details

No.	Parameter Name	Description	Setting Range	Default Setting
H4-07	Terminal FM signal level selection	0: 0 to 10 Vdc 1: -10 to 10 Vdc 2: 4 to 20 mA	0 to 2	0
H4-08	Terminal AM signal level selection			

◆ MEMOBUS/Modbus Termination

This drive is equipped with a built-in termination resistor for the RS-422/RS-485 communication port. DIP switch S2 enables or disabled the termination resistor as shown in ***Table 3.19***. The OFF position is the default. The termination resistor should be placed to the ON position when the drive is the last in a series of slave drives.

Refer to Switches and Jumpers on the Terminal Board on page 144 to locate switch S2.

Table 3.19 MEMOBUS/Modbus Switch Settings

S2 Position	Description
ON	Internal termination resistor ON
OFF	Internal termination resistor OFF (default setting)

Note: ***Refer to MEMOBUS/Modbus Communications on page 701*** for details on MEMOBUS/Modbus.

◆ Terminal DM+ and DM- Output Signal Selection

Slide switch S6 selects N.C. or N.O. as the state of the DM+ and DM- terminals for EDM output. The switch is initially set to N.C. Slide switch S6 is available on terminal board ETC74030□.

Table 3.20 EDM Switch Settings

S2 Position	Description
N.O.	Normally open
N.C.	Normally closed (default setting)

Note: ***Refer to Safe Disable Input Function on page 768*** for details on EDM.

3.11 Connect to a PC

This drive is equipped with a USB port (type-B).

The drive can connect to a USB port on a PC using a USB 2.0, AB-type cable (sold separately). After connecting the drive to a PC, Yaskawa DriveWizard Industrial software can be used to monitor drive performance and manage parameter settings. Contact Yaskawa for more information on DriveWizard Industrial.

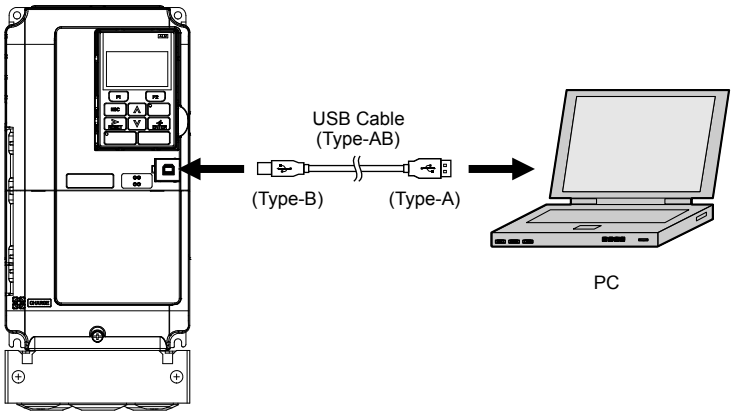

Figure 3.36 Connecting to a PC (USB)

3.12 External Interlock

Systems that may be affected during drive fault conditions should be interlocked with the drive fault output and ready signal.

◆ Drive Ready

When the “Drive ready” signal has been set to one of the multi-function contact outputs, that output will close whenever the drive is ready to accept a Run command or is already running.

The “Drive ready” signal switches off when operation is not possible for a Run command input under the following conditions regardless of whether a fault exists:

- when the power supply is shut off
- during a fault
- when there is problem with the control power supply
- when a parameter setting error makes the drive unable to run even if a Run command has been entered
- when a fault such as overvoltage or undervoltage is triggered as soon as the Run command is entered
- when the drive is in the Programming mode and will not accept a Run command even when entered

■ Interlock Circuit Example

Two drives running a single application might interlock with the controller using the Drive Ready and Fault output signals as shown below. *Figure 3.37* illustrates how the application would not be able to run if either drive experiences a fault or is unable to supply a Drive Ready signal.

Terminal	Output Signal	Parameter Setting
MA, MB, MC	Fault	–
M1-M2	Drive Ready	H2-01 = 06

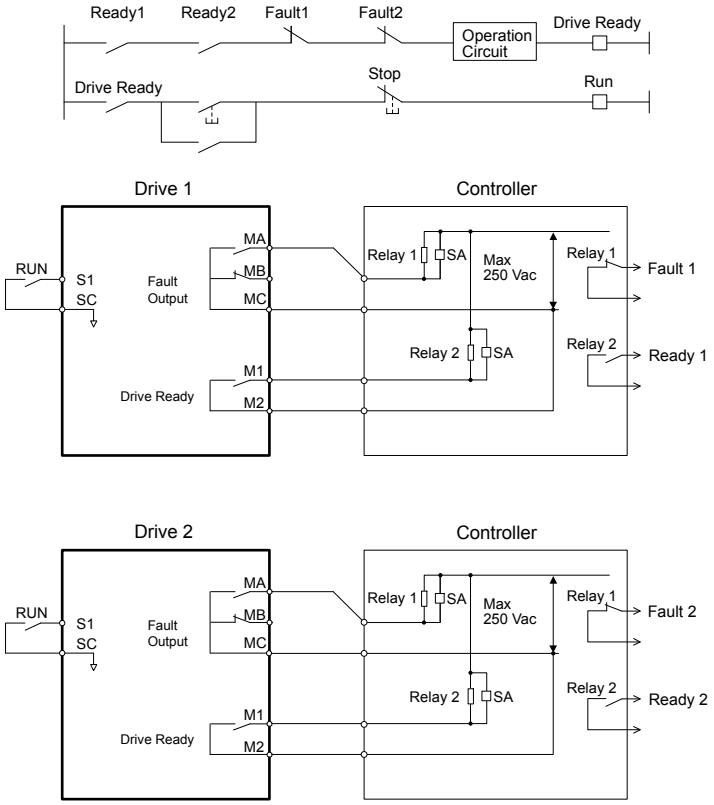

Figure 3.37 Interlock Circuit Example

3.13 Wiring Checklist

☑	No.	Item	Page(s)
		Drive, Peripherals, Option Cards	
☐	1	Check drive model number to ensure receipt of correct model.	*35*
☐	2	Make sure you have the correct braking resistors, DC link chokes, noise filters, and other peripheral devices.	*500*
☐	3	Check the option card model number.	*500*
		Installation Area and Physical Setup	
☐	4	Ensure that the area surrounding the drive complies with specifications.	*54*
		Power Supply Voltage, Output Voltage	
☐	5	The voltage from the power supply should be within the input voltage specification range of the drive.	*270*
☐	6	The voltage rating for the motor should match the drive output specifications.	*35* *641*
☐	7	Verify that the drive is properly sized to run the motor.	
		Main Circuit Wiring	
☐	8	Confirm proper branch circuit protection as specified by national and local codes.	*112*
☐	9	Properly wire the power supply to drive terminals R/L1, S/L2, and T/L3. **Note:** Confirm the following when wiring models 4A0930 and 4A1200: • Remove the jumpers shorting terminals R/L1-R1/L11, S/L2-S1/L21, and T/L3-T1/L31 when operating with 12-phase rectification. ***Refer to 12-Pulse Rectification on page 117*** for details. • When operating without 12-phase rectification, properly wire terminals R1/L11, S1/L21, and T1/L31 in addition to terminals R/L1, S/L2, and T/L3.	*115*
☐	10	Properly wire the drive and motor together. The motor lines and drive output terminals U/T1, V/T2, and W/T3 should match in order to produce the desired phase order. If the phase order is incorrect, the drive will rotate in the opposite direction.	*137*
☐	11	Use 600 Vac vinyl-sheathed wire for the power supply and motor lines.	*129*
☐	12	Use the correct wire gauges for the main circuit. ***Refer to Main Circuit Wire Gauges and Tightening Torques on page 129***. • Consider the amount of voltage drop when selecting wire gauges. Increase the wire gauge when the voltage drop is greater than 2% of motor rated voltage. Ensure the wire gauge is suitable for the terminal block. Use the following formula to calculate the amount of voltage drop: Line drop voltage (V) = $\sqrt{3}$ × wire resistance (Ω/km) × wire length (m) × current (A) × 10^{-3} • If the cable between the drive and motor exceeds 50 m, adjust the carrier frequency set to C6-02 accordingly.	*129* *137*
☐	13	Properly ground the drive. Review page *137*.	*137*
☐	14	Tighten control circuit and grounding terminal screws. ***Refer to Main Circuit Wire Gauges and Tightening Torques on page 129***.	*129*
☐	15	Set up overload protection circuits when running multiple motors from a single drive. 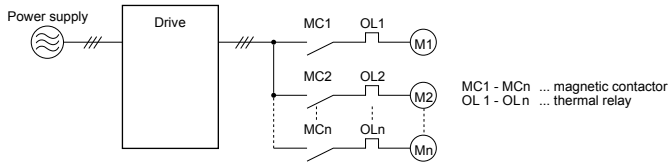 **Note:** Close MC1 – MCn before operating the drive. MC1 – MCn cannot be switched off during run.	–
☐	16	Install a magnetic contactor when using a dynamic braking option. Properly install the resistor and ensure that overload protection shuts off the power supply using the magnetic contactor.	*514*
☐	17	Verify phase advancing capacitors, input noise filters, or GFCIs are NOT installed on the output side of the drive.	–
		Control Circuit Wiring	
☐	18	Use twisted-pair line for all drive control circuit wiring.	*142*
☐	19	Ground the shields of shielded wiring to the GND ⏚ terminal.	*142*
☐	20	For 3-Wire sequence, set parameters for multi-function contact input terminals S1 – S8, and wire control circuits.	–
☐	21	Properly wire any option cards.	*142*
☐	22	Check for any other wiring mistakes. Only use a multimeter to check wiring.	–
☐	23	Properly fasten drive control circuit terminal screws. ***Refer to Main Circuit Wire Gauges and Tightening Torques on page 129***.	*129*

☑	No.	Item	Page(s)
☐	24	Pick up all wire clippings.	–
☐	25	Ensure that no frayed wires on the terminal block are touching other terminals or connections.	–
☐	26	Properly separate control circuit wiring and main circuit wiring.	–
☐	27	Analog signal line wiring should not exceed 50 m.	–
☐	28	Safe Disable input wiring should not exceed 30 m.	–

4

Start-Up Programming & Operation

This chapter explains the functions of the digital operator and how to program the drive for initial operation.

4.1 SECTION SAFETY....154
4.2 USING THE DIGITAL OPERATOR....155
4.3 THE DRIVE AND PROGRAMMING MODES....160
4.4 START-UP FLOWCHARTS....166
4.5 POWERING UP THE DRIVE....172
4.6 APPLICATION SELECTION....173
4.7 AUTO-TUNING....176
4.8 NO-LOAD OPERATION TEST RUN....190
4.9 TEST RUN WITH LOAD CONNECTED....192
4.10 VERIFYING PARAMETER SETTINGS AND BACKING UP CHANGES....193
4.11 TEST RUN CHECKLIST....195

4.1 Section Safety

⚠ DANGER

Electrical Shock Hazard

Do not connect or disconnect wiring while the power is on.

Failure to comply will result in death or serious injury.

⚠ WARNING

Electrical Shock Hazard

Do not operate equipment with covers removed.

Failure to comply could result in death or serious injury.

The diagrams in this section may include drives without covers or safety shields to illustrate details. Be sure to reinstall covers or shields before operating the drives and run the drives according to the instructions described in this manual.

Do not remove covers or touch circuit boards while the power is on.

Failure to comply could result in death or serious injury.

Prepare a separate holding brake.

Wire the holding brake so when a fault occurs, it is activated by an external sequence and shuts the power off or triggers an emergency switch. Failure to comply could result in death or serious injury.

4.2 Using the Digital Operator

Use the digital operator to enter Run and Stop commands, edit parameters, and display data including fault and alarm information.

◆ Digital Operator Keys and Displays

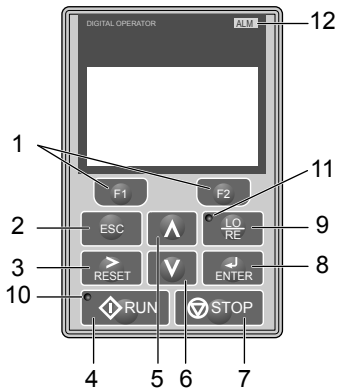

Figure 4.1 Keys and Displays on the Digital Operator

No.	Display	Name	Function
1	F1 F2	Function Key (F1, F2)	The functions assigned to F1 and F2 vary depending on the currently displayed menu. The name of each function appears in the lower half of the display window.
2	ESC	ESC Key	• Returns to the previous display. • Moves the cursor one space to the left. • Pressing and holding this button will return to the Frequency Reference display.
3	RESET	RESET Key	• Moves the cursor to the right. • Resets the drive to clear a fault situation.
4	RUN	RUN Key	Starts the drive in LOCAL mode.
5	∧	Up Arrow Key	Scrolls up to display the next item, selects parameter numbers, and increments setting values.
6	∨	Down Arrow Key	Scrolls down to display the previous item, selects parameter numbers, and decrements setting values.
7	STOP	STOP Key <1>	Stops drive operation.
8	ENTER	ENTER Key	• Enters parameter values and settings. • Selects a menu item to move between displays
9	LO RE	LO/RE Selection Key <2>	Switches drive control and frequency setting between the operator (LOCAL) and an external source (REMOTE).
10	RUN	RUN Light	Lit while the drive is operating the motor. Refer to page *157* for details.
11	LO RE	LO/RE Light	Lit while the operator is selected to run the drive (LOCAL mode). Refer to page *157* for details.
12	ALM	ALM LED Light	*Refer to ALARM (ALM) LED Displays on page 157*.

<1> The STOP key has highest priority. Pressing the STOP key will always cause the drive to stop the motor, even if a Run command is active at any external Run command source. To disable the STOP key priority, set parameter o2-02 to 0.

<2> The LO/RE key can only switch between LOCAL and REMOTE when the drive is stopped. To disable the LO/RE key to prohibit switching between LOCAL and REMOTE, set parameter o2-01 to 0.

◆ LCD Display

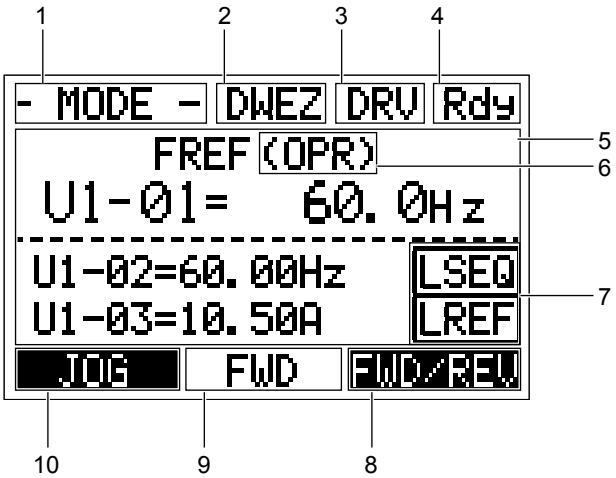

Figure 4.2 LCD Display

Table 4.1 Display and Contents

No.	Name	Display	Content
1	Operation Mode Menus	MODE	Displayed when in Mode Selection.
		MONITR	Displayed when in Monitor Mode.
		VERIFY	Indicates the Verify Menu.
		PRMSET	Displayed when in Parameter Setting Mode.
		A.TUNE	Displayed during Auto-Tuning.
		SETUP	Displayed when in Setup Mode.
2	DriveWorksEZ Function Selection	DWEZ	Displayed when DriveWorksEZ is set to enable. (A1-07 = 1 or 2)
3	Mode Display Area	DRV	Displayed when in Drive Mode.
		PRG	Displayed when in Programming Mode.
4	Ready	Rdy	Indicates the drive is ready to run.
5	Data Display	—	Displays specific data and operation data.
6	Frequency Reference Assignment <1>	OPR	Displayed when the frequency reference is assigned to the LCD Operator Option.
		AI	Displayed when the frequency reference is assigned to the Analog Input of the drive.
		COM	Displayed when the frequency reference is assigned to the MEMOBUS/Modbus Communication Inputs of the drive.
		OP	Displayed when the frequency reference is assigned to an Option Unit of the drive.
		RP	Displayed when the frequency reference is assigned to the Pulse Train Input of the drive.
7	LO/RE Display <2>	RSEQ	Displayed when the run command is supplied from a remote source.
		LSEQ	Displayed when the run command is supplied from the operator keypad.
		RREF	Displayed when the frequency reference is supplied from a remote source.
		LREF	Displayed when the frequency reference is supplied from the operator keypad.
8	Function Key 2 (F2)	FWD/REV	Pressing F2 switches between forward and reverse.
		DATA	Pressing F2 scrolls to the next display.
		→	Pressing F2 scrolls the cursor to the right.
		RESET	Pressing F2 resets the existing drive fault error.
9	FWD/REV	FWD	Indicates forward motor operation.
		REV	Indicates reverse motor operation.

No.	Name	Display	Content
10	Function Key 1 (F1)	JOG	Pressing F1 runs the motor at the Jog frequency.
		HELP	Pressing F1 displays the Help menu.
		←	Pressing F1 scrolls the cursor to the left.
		HOME	Pressing F1 returns to the top menu (Frequency Reference).
		ESC	Pressing F1 returns to the previous display.

<1> Displayed when in Frequency Reference Mode.
<2> Displayed when in Frequency Reference Mode and Monitor Mode.

◆ ALARM (ALM) LED Displays

Table 4.2 ALARM (ALM) LED Status and Contents

State	Content	Display
Illuminated	When the drive detects an alarm or error.	ALM
Flashing	• When an alarm occurs. • When an oPE is detected. • When a fault or error occurs during Auto-Tuning.	ALM
Off	Normal operation (no fault or alarm).	ALM

◆ LO/RE LED and RUN LED Indications

Table 4.3 LO/RE LED and RUN LED Indications

LED	Lit	Flashing <1>	Flashing Quickly <1> <2>	Off
LO RE	When the operator is selected for Run command and frequency reference control (LOCAL)	—	—	When a device other than the operator is selected for Run command and frequency reference control (REMOTE)
RUN	During run	• During deceleration to stop • When a Run command is input and frequency reference is 0 Hz	• While the drive was set to LOCAL, a Run command was entered to the input terminals then the drive was switched to REMOTE. • A Run command was entered via the input terminals while the drive was not in Drive Mode. • During deceleration or stop when a Fast Stop command was entered. • The drive output is shut off by the Safe Disable function. • The STOP key was pressed while drive was running in REMOTE. • The drive was powered up with b1-17 = 0 (default) while the Run command is active.	During stop
Examples	RUN	RUN	RUN	RUN

<1> Refer to *Figure 4.3* for the difference between “flashing” and “flashing quickly”.
<2> The drive cannot start operation.

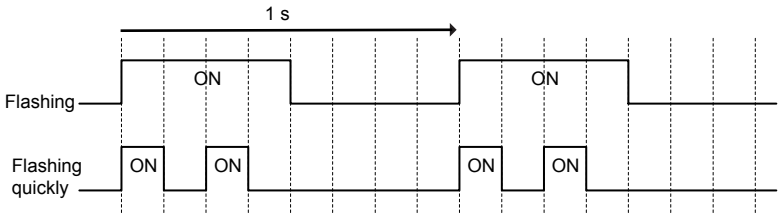

Figure 4.3 RUN LED Status and Meaning

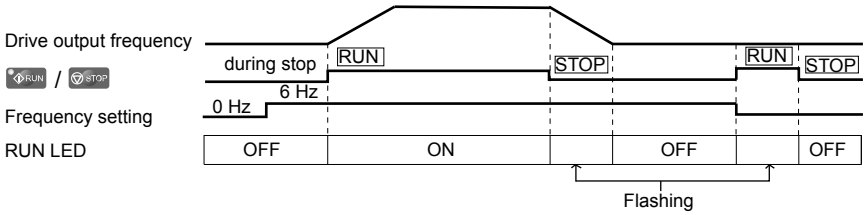

Figure 4.4 RUN LED and Drive Operation

◆ Menu Structure for Digital Operator

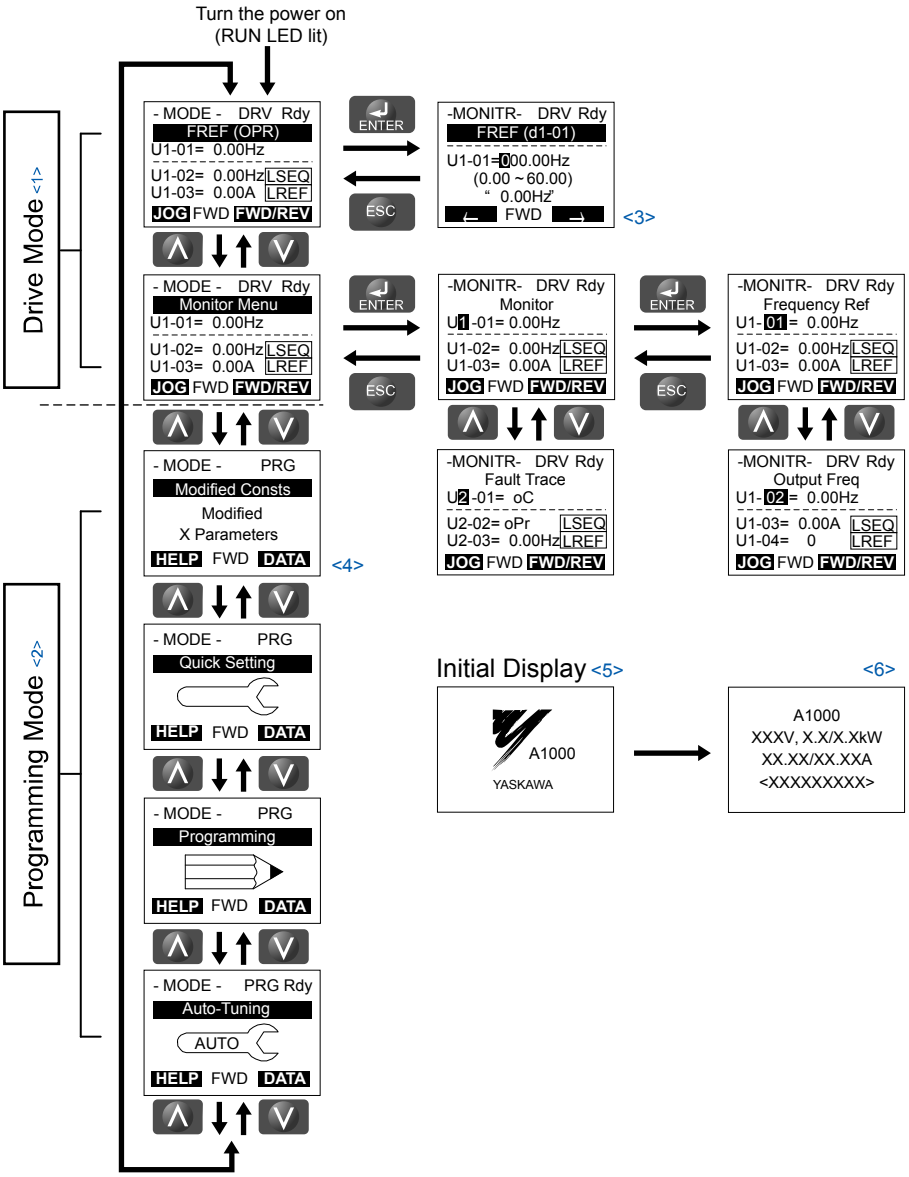

Figure 4.5 Digital Operator Menu and Screen Structure

<1> Pressing RUN will start the motor.
<2> Drive cannot operate motor.
<3> Flashing characters are shown as 0.
<4> "X" characters are used as examples in this manual. The LCD Operator will display the actual setting values.
<5> The Frequency Reference appears after the initial display that shows the product name.
<6> The information that appears on the display will vary depending on the drive.

4.3 The Drive and Programming Modes

The drive has a Drive Mode to operate the motor and a Programming Mode to edit parameter settings.

Drive Mode: In Drive Mode the user can operate the motor and observe U Monitor parameters. Parameter settings cannot be edited or changed when in Drive Mode.

Programming Mode: In Programming Mode the user can edit and verify parameter settings and perform Auto-Tuning. When the drive is in Programming Mode it will not accept a Run command unless b1-08 is set to 1.

Note:
1. If b1-08 is set to 0, the drive will only accept a Run command in Drive Mode. After editing parameters, the user must exit the Programming Mode and enter Drive Mode before operating the motor.
2. Set b1-08 to 1 to allow motor operation from the drive while in Programming Mode.

◆ Navigating the Drive and Programming Modes

The drive is set to operate in Drive Mode when it is first powered up. Switch between display screens by using the ∧ and ∨ keys.

Mode	Contents	Operator Display	Description
Power Up	Frequency Reference (default)	- MODE - DRV Rdy FREF (OPR) U1-01= 0.00Hz U1-02= 0.00Hz LSEQ U1-03= 0.00A LREF JOG FWD FWD/REV	This display screen allows the user to monitor and change the frequency reference while the drive is running. *Refer to The Drive and Programming Modes on page 160*. **Note:** Use parameter o1-02 to select the data displayed when the drive is first powered up. Setting parameter A1-02 to 6 or 7 (AOLV/PM or CLV/PM control) will change display units to percent.
Drive Mode		∧ ↓ ↑ ∨	
	Monitor Display	- MODE - DRV Rdy Monitor Menu U1-01= 0.00Hz U1-02= 0.00Hz LSEQ U1-03= 0.00A LREF JOG FWD FWD/REV	Lists the monitor parameters (U□-□□ parameters) available in the drive. Press the Enter Key and then use the Up, Down, ESC, and Reset keys to navigate through the drive monitors.
Programming Mode		∧ ↓ ↑ ∨	
	Verify Menu	- MODE - PRG Modified Consts Modified X Parameters HELP FWD DATA	Lists all parameters that have been edited or changed from default settings.➡ *Refer to Verifying Parameter Changes: Verify Menu on page 163*.
		∧ ↓ ↑ ∨	
	Setup Group	- MODE - PRG Quick Setting HELP FWD DATA	A select list of parameters necessary to get the drive operating quickly.➡ *Refer to Using the Setup Group on page 164*. **Note:** Parameters listed in the Setup Group differ depending the Application Preset in parameter A1-06. *Refer to Application Selection on page 173*.
		∧ ↓ ↑ ∨	
	Parameter Setting Mode	- MODE - PRG Programming HELP FWD DATA	Allows the user to access and edit all parameter settings.➡ *Refer to Parameter List on page 555*.
		∧ ↓ ↑ ∨	
	Auto-Tuning Mode	- MODE - PRG Rdy Auto-Tuning AUTO HELP FWD DATA	Motor parameters are calculated and set automatically.➡ *Refer to Auto-Tuning on page 176*.
		∧ ↓ ↑ ∨	

Mode	Contents	Operator Display	Description
Drive Mode	Frequency Reference	- MODE - DRV Rdy FREF (OPR) U1-01= 0.00Hz U1-02= 0.00Hz LSEQ U1-03= 0.00A LREF JOG FWD FWD/REV	Returns to the frequency reference display screen.

■ Drive Mode Details

The following actions are possible in the Drive Mode:

- Run and stop the drive
- Monitor the operation status of the drive (frequency reference, output frequency, output current, output voltage, etc.)
- View information on an alarm
- View a history of alarms that have occurred

Figure 4.6 illustrates how to change the frequency reference from F 0.00 (0 Hz) to F 6.00 (6 Hz) while in the Drive Mode. This example assumes the drive is set to LOCAL.

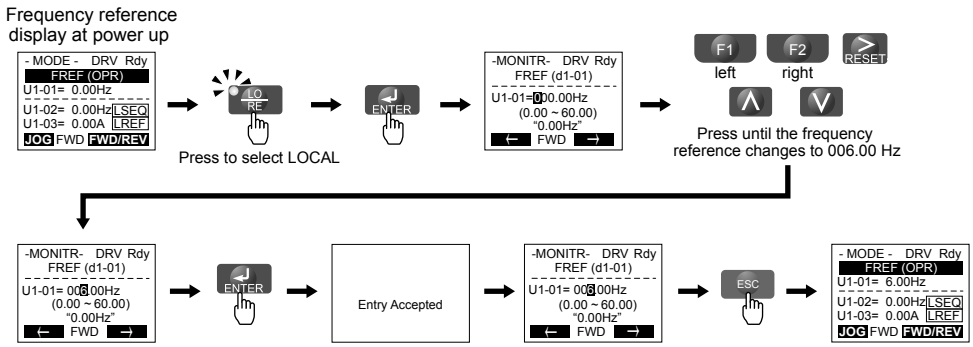

Figure 4.6 Setting the Frequency Reference while in the Drive Mode

Note: The drive will not accept a change to the frequency reference until the ENTER key is pressed after the frequency reference is entered. This feature prevents accidental setting of the frequency reference. To have the drive accept changes to the frequency reference as soon as changes are made without requiring the ENTER key, set o2-05 to 1.

■ Programming Mode Details

The following actions are possible in the Programming Mode:

- **Parameter Setting Mode:** Access and edit all parameter settings.
- **Verify Menu:** View a list of parameters that have been changed from the default values.
- **Setup Group:** Access a list of commonly used parameters to simplify setup (*Refer to Simplified Setup Using the Setup Group on page 164*).
- **Auto-Tuning Mode:** Automatically calculate and set motor parameters to optimize drive performance.

◆ Changing Parameter Settings or Values

This example explains changing C1-02 (Deceleration Time 1) from 10.0 seconds (default) to 20.0 seconds.

Step			Display/Result
1.	Turn on the power to the drive. The initial display appears.	→	- MODE - DRV Rdy FREF (OPR) U1-01= 0.00Hz U1-02= 0.00Hz LSEQ U1-03= 0.00A LREF JOG FWD FWD/REV
2.	Press ∧ or ∨ until the Parameter Setting Mode screen appears.	→	- MODE - PRG Programming HELP FWD DATA

Step			Display/Result
3.	Press ENTER to enter the parameter menu tree.	→	-PRMSET- PRG Initialization A1-00= 0 Select Language ← FWD →
4.	Press ∧ or ∨ to select the C parameter group.	→	-PRMSET- PRG Basic Setup C1-01= 10.0 sec Accel Time 1 ← FWD →
5.	Press ENTER two times.		→ -PRMSET- PRG Accel/Decel C1-01= 10.0 sec Accel Time 1 ← FWD → → -PRMSET- PRG Accel Time 1 C1-01= 10.0Sec (0.0~6000.0) "10.0 sec" ← FWD →
6.	Press ∧ or ∨ to select parameter C1-02.	→	-PRMSET- PRG Decel Time 1 C1-02= 10.0Sec (0.0~6000.0) "10.0 sec" ← FWD →
7.	Press ENTER to view the current setting value (10.0 s). The leftmost digit flashes.	→	-PRMSET- PRG Decel Time 1 C1-02= 0010.0Sec (0.0~6000.0) "10.0 sec" ← FWD →
8.	Press F1, F2, or RESET until the desired number is selected. "1" flashes.	→	-PRMSET- PRG Decel Time 1 C1-02=0010.0Sec (0.0~6000.0) "10.0 sec" ← FWD →
9.	Press ∧ and enter 0020.0.	→	-PRMSET- PRG Decel Time 1 C1-02=0020.0Sec (0.0~6000.0) "10.0 sec" ← FWD →
10.	Press ENTER to confirm the change.	→	Entry Accepted
11.	The display automatically returns to the screen shown in Step 4.	→	-PRMSET- PRG Decel Time 1 C1-02= 20.0Sec (0.0~6000.0) "10.0 sec" ← FWD →
12.	Press ESC as many times as necessary to return to the initial display.	→	- MODE - DRV Rdy FREF (OPR) U1-01= 0.00Hz U1-02= 0.00Hz LSEQ U1-03= 0.00A LREF JOG FWD FWD/REV

◆ Verifying Parameter Changes: Verify Menu

The Verify Menu lists edited parameters from the Programming Mode or as a result of Auto-Tuning. The Verify Menu helps determine which settings have been changed, and is particularly useful when replacing a drive. If no settings have been changed, the Verify Menu will read “None”. The Verify Menu also allows users to quickly access and re-edit any parameter settings that have been changed.

Note: The Verify Menu will not display parameters from the A1 group (except for A1-02) or E5-01 even if those parameters have been changed from their default settings.

The following example is a continuation of the steps above. Here, parameter C1-02 is accessed using the Verify Menu, and is changed again from 10.0 s to 20.0 s.

To check the list of edited parameters:

	Step		Display/Result
1.	Turn on the power to the drive. The initial display appears.	➡	- MODE - DRV Rdy FREF (OPR) U1-01= 0.00Hz U1-02= 0.00Hz LSEQ U1-03= 0.00A LREF JOG FWD FWD/REV
2.	Press ∧ or ∨ until the display shows the top of the Verify Menu.	➡	- MODE - PRG Modified Consts Modified X Parameters HELP FWD DATA
3.	Press ENTER to enter the list of parameters that have been edited from their original default settings. If parameters other than C1-02 have been changed, use ∧ or ∨ to scroll until C1-02 appears.	➡	- VERIFY - PRG Rdy Accel Time 1 C1-02 = 20.0sec (0.0~6000.0) “10.0sec” Home FWD DATA
4.	Press ENTER to access the setting value. Left digit flashes.	➡	- VERIFY - PRG Rdy Accel Time 1 C1-01=0020.0sec (0.0~6000.0) “10.0sec” Home FWD DATA

◆ Simplified Setup Using the Setup Group

The Setup Group lists the basic parameters necessary to set up the drive for an application. This group expedites the startup process for an application by showing only the most important parameters for the application.

■ Using the Setup Group

Figure 4.7 illustrates how to enter and how to change parameters in the Setup Group.

The first display shown when entering the Setup Group is the Application Selection menu. Skipping this display will keep the current Setup Group parameter selection. The default setting for the Setup Group is a group of parameters most commonly use in general-purpose applications. Pressing the ENTER key from the Application Selection menu and selecting an Application Preset will change the Setup Group to parameters optimal for the application selected. *Refer to Application Selection on page 173*.

In this example, the Setup Group is accessed to change b1-01 from 1 to 0. This changes the source of the frequency reference from the control circuit terminals to the digital operator.

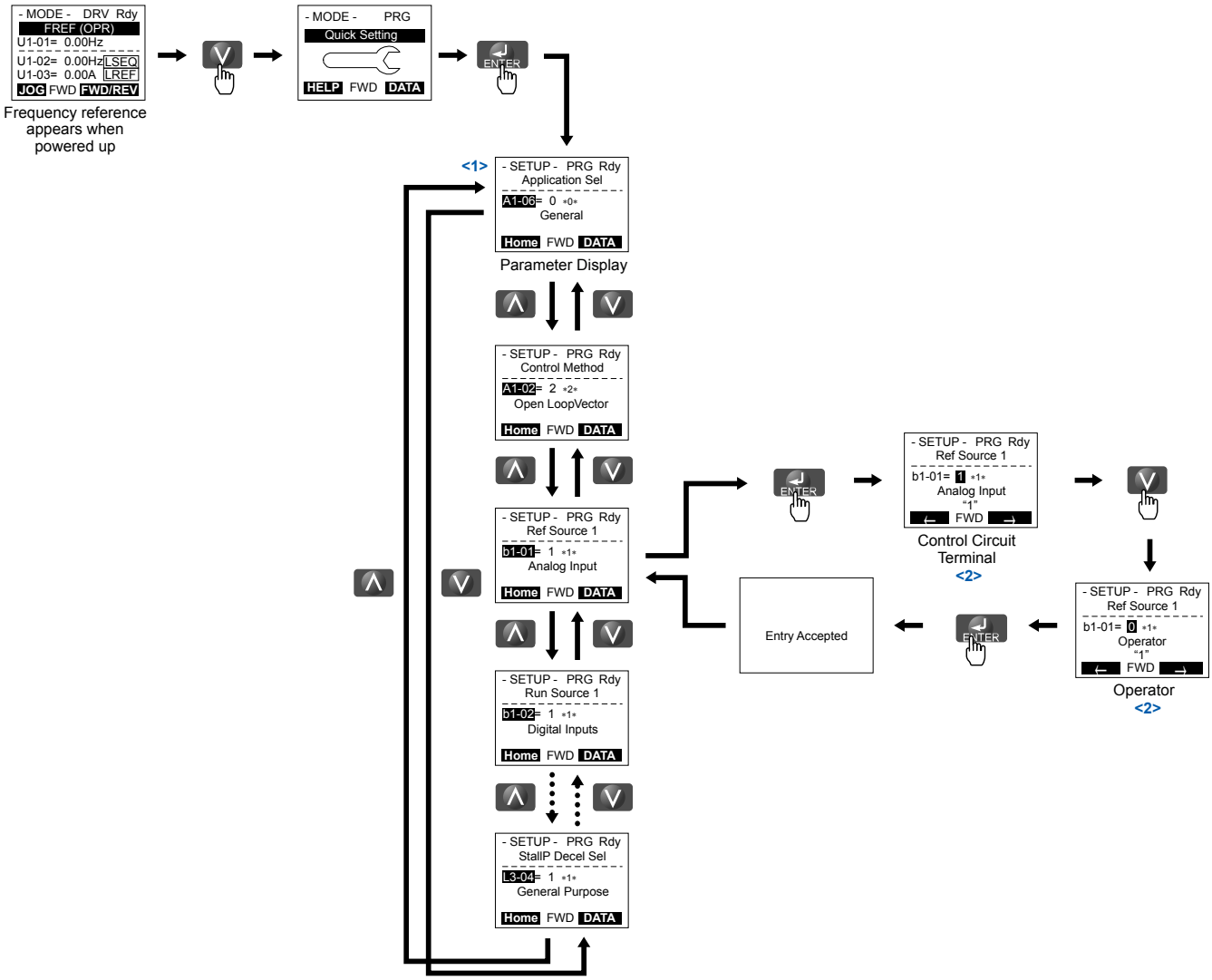

Figure 4.7 Setup Group Example

<1> Use the up and down arrow keys to scroll through the Setup Group. Press the ENTER key to view or change parameter settings.

<2> To return to the previous menu without saving changes, press the ESC key.

■ Setup Group Parameters

Table 4.4 lists the parameters available by default in the Setup Group. Selecting an Application Preset in parameter A1-06 or from the Application Selection Menu of the Setup Group automatically changes the parameters selected for the Setup Group. *Refer to Application Selection on page 173* for more information.

Use the Programming Mode to access parameters not displayed in the Setup Group.

Table 4.4 Setup Group Parameters

Parameter	Name	Parameter	Name
A1-02	Control Method Selection	E1-01	Input Voltage Setting
b1-01	Frequency Reference Selection 1	E1-03	V/f Pattern Selection
b1-02	Run Command Selection 1	E1-04	Maximum Output Frequency
b1-03	Stopping Method Selection	E1-05	Maximum Voltage
C1-01	Acceleration Time 1	E1-06	Base Frequency
C1-02	Deceleration Time 1	E1-09	Minimum Output Frequency
C6-01	Drive Duty Mode	E1-13	Base Voltage
C6-02	Carrier Frequency Selection	E2-01	Motor Rated Current
d1-01	Frequency Reference 1	E2-04	Number of Motor Poles
d1-02	Frequency Reference 2	E2-11	Motor Rated Power
d1-03	Frequency Reference 3	H4-02	Multi-Function Analog Output Terminal FM Gain
d1-04	Frequency Reference 4	L1-01	Motor Overload Protection Function Selection
d1-17	Jog Frequency Reference	L3-04	Stall Prevention Selection during Deceleration

Note: 1. Parameter availability depends on the control mode set in A1-02; some parameters listed above may not be accessible in all control modes.
2. Parameters listed in *Table 4.4* are set in alphanumeric order as User Parameters in A2-01 to A2-26.

◆ Switching Between LOCAL and REMOTE

LOCAL mode is when the drive is set to accept the Run command from the digital operator RUN key. REMOTE mode is when the drive is set to accept the Run command from an external device (i.e., input terminals or serial communications).

WARNING! *Sudden Movement Hazard. The drive may start unexpectedly if the Run command is already applied when switching from LOCAL mode to REMOTE mode when b1-07 = 1, resulting in death or serious injury. Be sure all personnel are clear of rotating machinery.*

Switch the operation between LOCAL and REMOTE using the LO/RE key on the digital operator or via a digital input.

Note: 1. After selecting LOCAL, the LO/RE light will remain lit.
2. The drive will not allow the user to switch between LOCAL and REMOTE during run.

■ Using the LO/RE Key on the Digital Operator

	Step		Display/Result
1.	Turn on the power to the drive. The initial display appears.	→	- MODE - DRV Rdy FREF (OPR) U1-01= 0.00Hz U1-02= 0.00Hz LSEQ U1-03= 0.00A LREF JOG FWD FWD/REV
2.	Press LO/RE. The LO/RE light will light up. The drive is now in LOCAL. To set the drive for REMOTE operation, press the LO/RE key again.	→	LO/RE → LO/RE

■ Using Input Terminals S1 through S8 to Switch between LOCAL and REMOTE

It is possible to switch between LOCAL and REMOTE modes using one of the digital input terminals S1 through S8 (set the corresponding parameter H1-□□ to "1").

Setting H1-□□ to 1 disables the LO/RE key on the digital operator. *Refer to H1: Multi-Function Digital Inputs on page 298* for details.

4.4 Start-Up Flowcharts

These flowcharts summarize steps required to start the drive. Use the flowcharts to determine the most appropriate start-up method for a given application. The charts are quick references to help familiarize the user with start-up procedures.

Note:
1. *Refer to Application Selection on page 173* to set up the drive using one of the Application Presets.
3. Function availability differs for drive models 4A0930 and 4A1200. *Refer to Parameter Differences for Drive Models 4A0930 and 4A1200 on page 558* for details.

Flowchart	Subchart	Objective	Page
A	–	Basic start-up procedure and motor tuning	*167*
–	A-1	Simple motor setup using V/f mode	*168*
	A-2	High-performance operation using Open Loop Vector or Closed Loop Vector motor control	*169*
	A-3	Setting up the drive to run a permanent magnet (PM) motor	*170*

◆ Flowchart A: Basic Start-Up and Motor Tuning

Flowchart A in *Figure 4.8* describes a basic start-up sequence that varies slightly depending on the application. Use the drive default parameter settings in simple applications that do not require high precision.

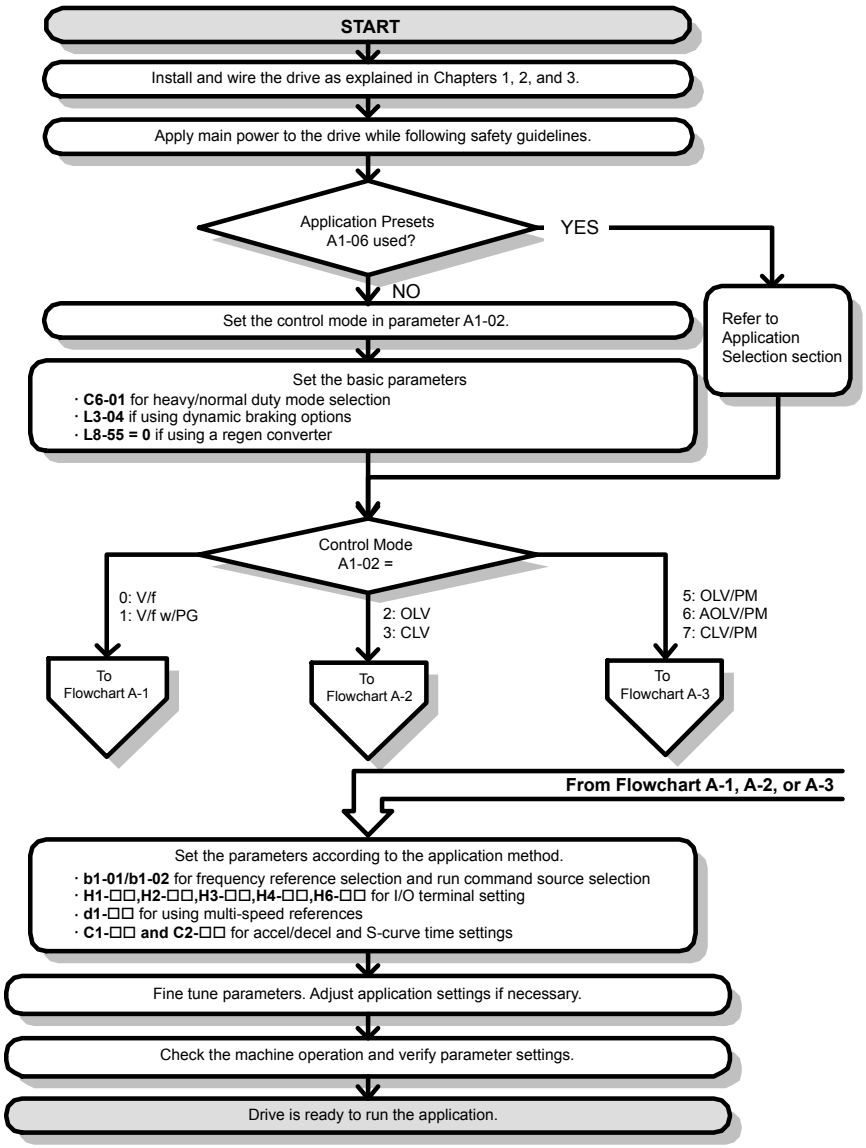

Figure 4.8 Basic Start-Up

Note:
1. Execute Stationary Auto-Tuning for Line-to-Line Resistance if the drive has been Auto-Tuned and then moved to a different location where the motor cable length exceeds 50 m.
2. Perform Auto-Tuning again after installing an AC reactor or other such components to the output side of the drive.

◆ Subchart A-1: Simple Motor Setup Using V/f Control

Flowchart A1 in *Figure 4.9* describes simple motor setup for V/f Control, with or without PG feedback. V/f Control is suited for more basic applications such as fans and pumps. This procedure illustrates Energy Savings and Speed Estimation Speed Search.

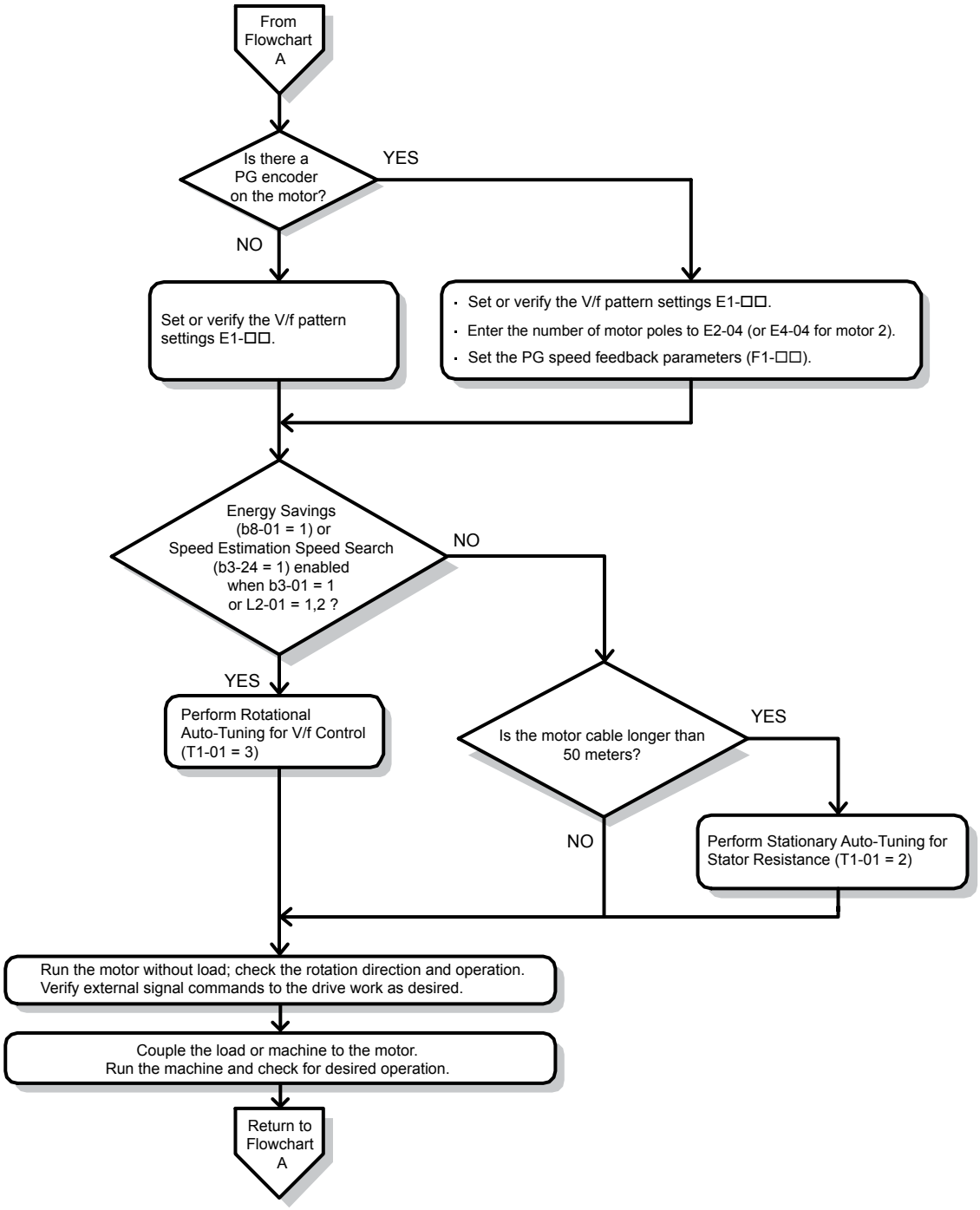

Figure 4.9 Simple Motor Setup with Energy Savings or Speed Search

◆ Subchart A-2: High Performance Operation Using OLV or CLV

Flowchart A2 in *Figure 4.10* describes the setup procedure for high-performance with Open Loop Vector Control or Closed Loop Vector Control, which is appropriate for applications requiring high starting torque and torque limits.

Note: Although the drive sets parameters for the PG encoder during Auto-Tuning, sometimes the direction of the motor and direction of the PG get reversed. Use parameter F1-05 to switch the direction of the PG so that it matches the motor direction.

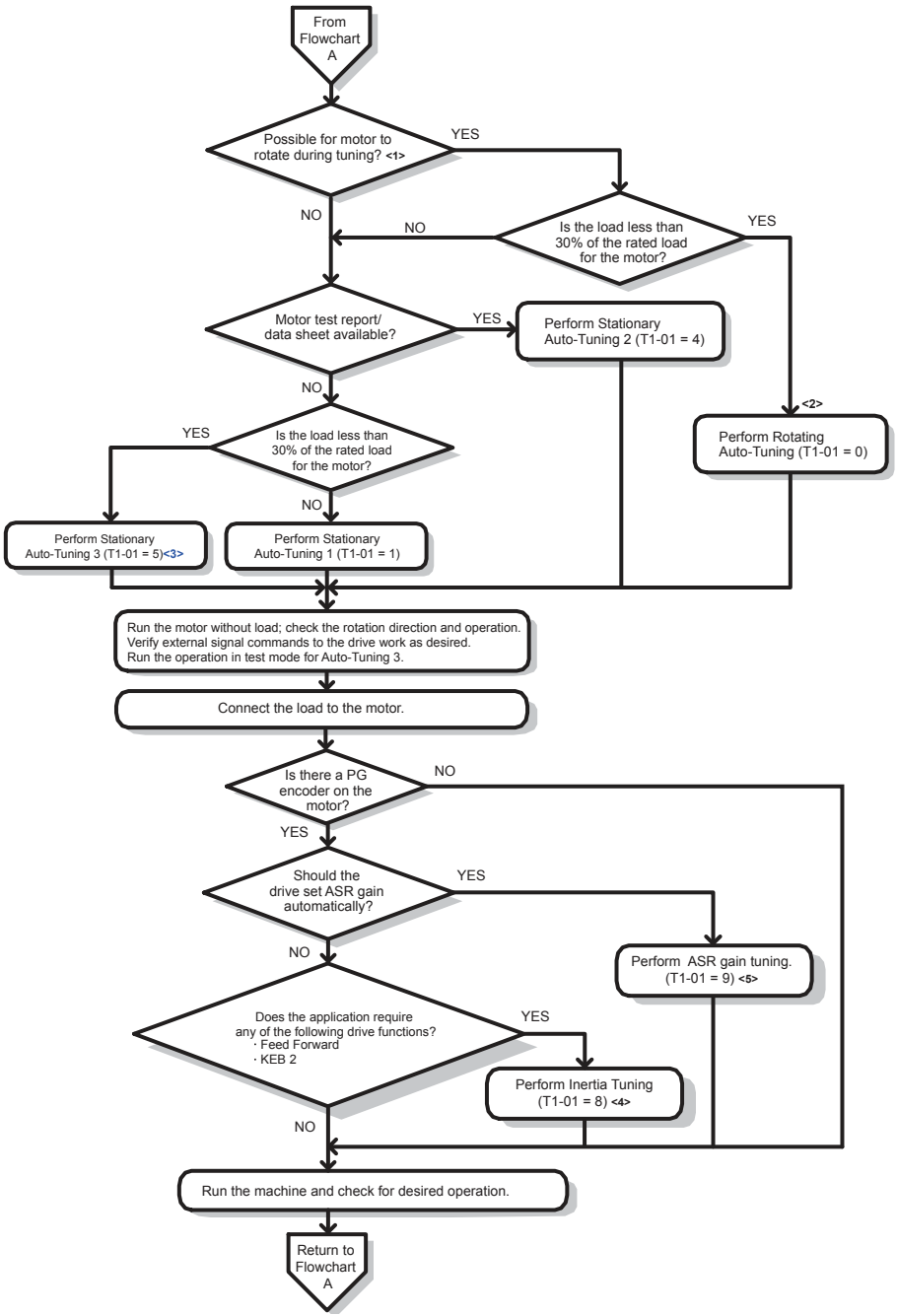

Figure 4.10 Flowchart A2: High Performance Operation Using OLV or CLV

<1> Decouple the load from the motor to properly perform Rotational Auto-Tuning.

<2> Rotational Auto-Tuning can still be performed if the load is 30% or less, though Stationary Auto-Tuning may yield better control performance.

<3> Make sure the motor and load can run freely (i.e., if a brake is mounted, make sure it is released).

<4> ASR Gain Tuning automatically performs Inertia Tuning and sets parameters related to Feed Forward and the KEB Ride-Thru function.

◆ Subchart A-3: Operation with Permanent Magnet Motors

Flowchart A3 in *Figure 4.11* describes the setup procedure for running a PM motor in Open Loop Vector Control. PM motors can be used for more energy-efficient operation in reduced or variable torque applications.

Note:
1. Although the drive sets parameters for the PG encoder during Auto-Tuning, sometimes the direction of the motor and direction of the PG get reversed. Use parameter F1-05 to switch the direction of the PG so that it matches the motor direction.
2. Realign the Z Pulse if the PG encoder is replaced. Set T2-01 to 3 to recalibrate the drive for the new encoder.

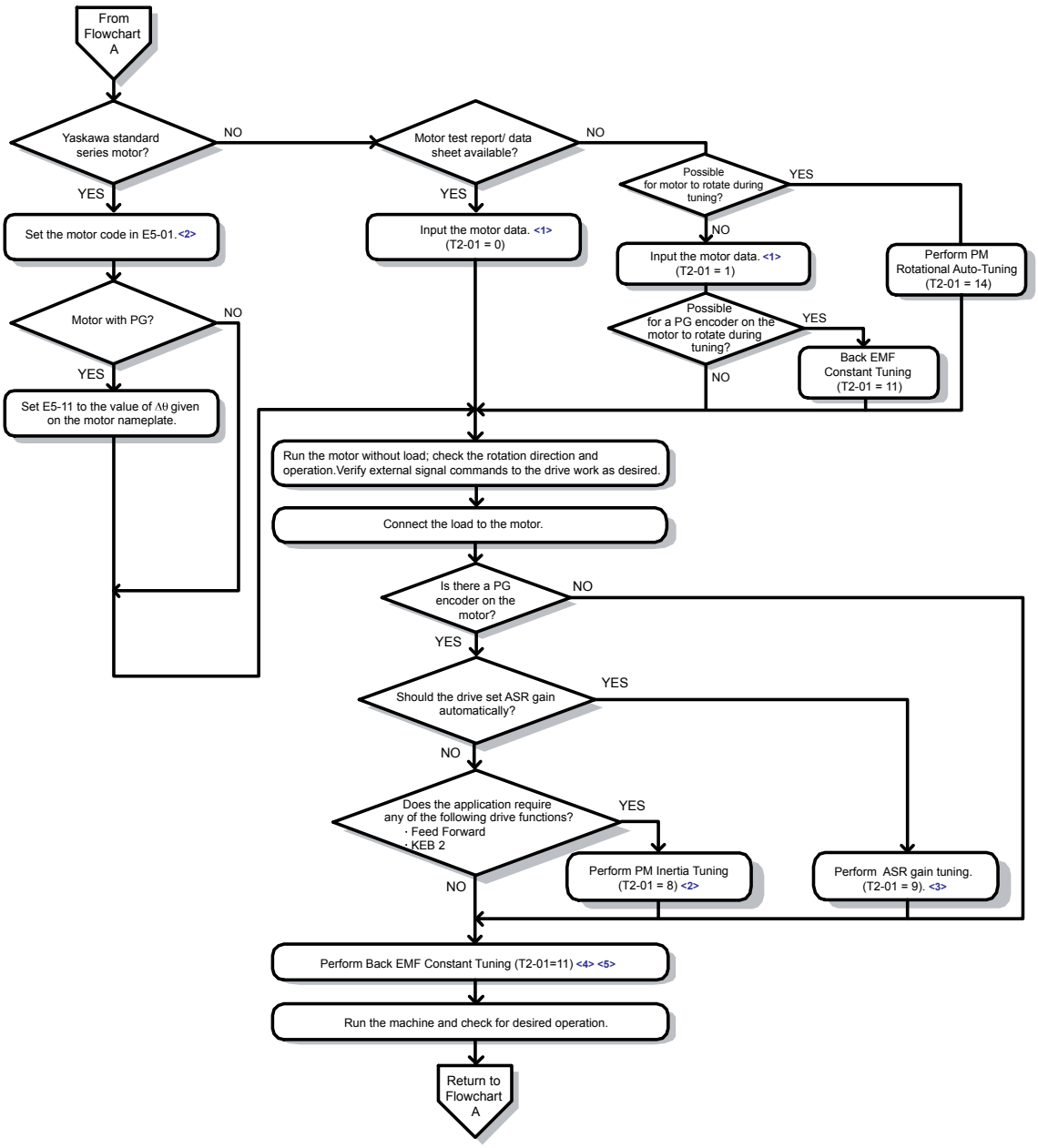

Figure 4.11 Operation with Permanent Magnet Motors

<1> Enter the motor code to E5-01 when using a Yaskawa PM motor (SMRA Series, SSR1 Series, and SST4 Series). If using a motor from another manufacturer, enter “FFFF”.

<2> Set E5-01 to the motor code to eliminate the need to perform tuning. Refer to Parameters Changed by Motor Code Selection (for PM Motors) in the drive Technical Manual for details.

<3> Make sure the motor and load can run freely (i.e., if a brake is mounted, make sure it is released).

<4> ASR Gain Tuning automatically performs Inertia Tuning and sets parameters related to Feed Forward and the KEB Ride-Thru function.

<5> Back EMF Constant Tuning automatically measures motor induced voltage and then sets E5-09 when the motor report or data sheets are not available.

<6> This type of Auto-Tuning is available in drive software versions PRG: 1015 and later.

4.5 Powering Up the Drive

◆ Powering Up the Drive and Operation Status Display

■ Powering Up the Drive

Review the following checklist before turning the power on.

Item to Check	Description
Power supply voltage	200 V class: Three-phase 200 to 240 Vac 50/60 Hz 400 V class: Three-phase 380 to 480 Vac 50/60 Hz 600 V class: Three-phase 500 to 600 Vac 50/60 Hz
	Properly wire the power supply input terminals (R/L1, S/L2, T/L3). <1>
	Check for proper grounding of drive and motor.
Drive output terminals and motor terminals	Properly wire drive output terminals U/T1, V/T2, and W/T3 with motor terminals U, V, and W.
Control circuit terminals	Check control circuit terminal connections.
Drive control terminal status	Open all control circuit terminals (off).
Status of the load and connected machinery	Decouple the motor from the load.

<1> Confirm the following when connecting models 4A0930 and 4A1200: Remove the jumpers on R1/L11, S1/L21, and T1/L31 when using 12-pulse rectification. ***Refer to 12-Pulse Rectification on page 117*** for details. When operating without 12-pulse rectification, properly wire terminals R1/L11, S1/L21, and T1/L31 in addition to terminals R/L1, S/L2, and T/L3.

■ Status Display

When the power supply to the drive is turned on, the digital operator lights will appear as follows:

Status	Name	Description
Normal Operation		The data display area displays the frequency reference. DRV is lit.
Fault	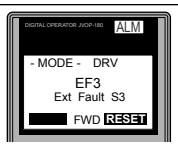 External fault (example)	Data displayed varies by the type of fault. ***Refer to Fault Displays, Causes, and Possible Solutions on page 404*** for more information. ALM and DRV are lit.

4.6 Application Selection

Several Application Presets are available to facilitate drive setup for commonly used applications. Selecting one of these Application Presets automatically assigns functions to the input and output terminals and sets a predefined group of parameters to values appropriate for the selected application.

In addition, the parameters most likely to be changed are assigned to the group of User Parameters, A2-01 through A2-16. User Parameters are part of the Setup Group, which provides quicker access by eliminating the need to scroll through multiple menus.

An Application Preset can either be selected from the Application Selection menu in the Setup Group (***Refer to Simplified Setup Using the Setup Group on page 164***) or in parameter A1-06. The following presets can be selected:

Note:
1. Application Presets can only be selected if all drive parameters are at their original default settings. It may be necessary to initialize the drive by setting A1-03 to “2220” or “3330” prior to selecting an Application Preset.
2. Do not set any value outside the allowable range for A1-06 (Application Presets). If an out-of-range value is set, “APPL” will be displayed flashing in the Setup group and the up and down arrow keys cannot be used. If this happens, press the ESC key to return to the Setup group. It will then be possible to switch to another mode using the up and down arrow keys. Setting values to A1-06 out of the setting range will not affect drive operation.

WARNING! *Sudden Movement Hazard. Confirm the drive I/O signals and external sequence before performing a test run. Setting parameter A1-06 may automatically change the I/O terminal function from the default setting. Failure to comply may result in death or serious injury.*

No.	Parameter Name	Setting Range	Default
A1-06	Application Preset	0: General-purpose 1: Water supply pump 2: Conveyor 3: Exhaust fan 4: HVAC fan 5: Air compressor	0

◆ Setting 1: Water Supply Pump Application

Table 4.5 Water Supply Pump: Parameter Settings

No.	Name	Default Setting
A1-02	Control Method Selection	0: V/f Control
b1-04	Reverse Operation Selection	1: Reverse Prohibited
C1-01	Acceleration Time 1	1.0 s
C1-02	Deceleration Time 1	1.0 s
C6-01	Duty Rating	1: Normal Duty (ND)
E1-03	V/f Pattern Selection	F: V/f Pattern Selection
E1-07	Mid Output Frequency	30.0 Hz
E1-08	Mid Output Frequency Voltage	50.0 V
L2-01	Momentary Power Loss Operation Selection	1: Enabled
L3-04	Stall Prevention Selection during Deceleration	1: Enabled

Table 4.6 Water Supply Pump: User Parameters (A2-01 to A2-16)

No.	Parameter Name
b1-01	Frequency Reference Selection
b1-02	Run Command Selection
b1-04	Reverse Operation Selection
C1-01	Acceleration Time 1
C1-02	Deceleration Time 1
E1-03	V/f Pattern Selection
E1-07	Mid Output Frequency
E1-08	Mid Output Frequency Voltage

No.	Parameter Name
E2-01	Motor Rated Current
H1-05	Multi-Function Digital Input Terminal S5 Function Selection
H1-06	Multi-Function Digital Input Terminal S6 Function Selection
H1-07	Multi-Function Digital Input Terminal S7 Function Selection
L5-01	Number of Auto Restart Attempts

◆ Setting 2: Conveyor Application

Table 4.7 Conveyor: Parameter Settings

No.	Parameter Name	Default Setting
A1-02	Control Method Selection	0: V/f Control
C1-01	Acceleration Time 1	3.0 s
C1-02	Deceleration Time 1	3.0 s
C6-01	Duty Rating	0: Heavy Duty (HD)
L3-04	Stall Prevention Selection during Deceleration	1: Enabled

Table 4.8 Conveyor: User Parameters (A2-01 to A2-16)

No.	Parameter Name	No.	Parameter Name
A1-02	Control Method Selection	C1-02	Deceleration Time 1
b1-01	Frequency Reference Selection	E2-01	Motor Rated Current
b1-02	Run Command Selection	L3-04	Stall Prevention Selection during Deceleration
C1-01	Acceleration Time 1	–	–

◆ Setting 3: Exhaust Fan Application

Table 4.9 Exhaust Fan: Parameter Settings

No.	Parameter Name	Default Setting
A1-02	Control Method Selection	0: V/f Control
b1-04	Reverse Operation Selection	1: Reverse Prohibited
C6-01	Duty Selection	1: Normal Duty (ND)
E1-03	V/f Pattern Selection	F: V/f Pattern Selection
E1-07	Mid Output Frequency	30.0 Hz
E1-08	Mid Output Frequency Voltage	50.0 V
L2-01	Momentary Power Loss Operation Selection	1: Enabled
L3-04	Stall Prevention Selection during Deceleration	1: Enabled

Table 4.10 Exhaust Fan: User Parameters (A2-01 to A2-16)

No.	Parameter Name	No.	Parameter Name
b1-01	Frequency Reference Selection	E1-07	Mid Output Frequency
b1-02	Run Command Selection	E1-08	Mid Output Frequency Voltage
b1-04	Reverse Operation Selection	E2-01	Motor Rated Current
b3-01	Speed Search Selection at Start	H1-05	Multi-Function Digital Input Terminal S5 Function Selection
C1-01	Acceleration Time 1	H1-06	Multi-Function Digital Input Terminal S6 Function Selection
C1-02	Deceleration Time 1	H1-07	Multi-Function Digital Input Terminal S7 Function Selection
E1-03	V/f Pattern Selection	L5-01	Number of Auto Restart Attempts

◆ Setting 4: HVAC Fan Application

Table 4.11 HVAC Fan: Parameter Settings

No.	Parameter Name	Default Setting
A1-02	Control Method Selection	0: V/f Control
b1-04	Reverse Operation Selection	1: Reverse Prohibited
b1-17	Run Command at Power Up	1: Run command issued, motor operation start
C6-01	Drive Duty Mode Selection	1: Normal Duty (ND)
C6-02	Carrier Frequency Selection	3: 8.0 kHz
H2-03	Terminal P2-PC Function Selection	39: Watt Hour Pulse Output
L2-01	Momentary Power Loss Operation Selection	2: CPU Power Active - Drive will restart if power returns prior to control power supply shut down.
L8-03	Overheat Pre-Alarm Operation Selection	4: Operation at lower speed
L8-38	Carrier Frequency Reduction Selection	2: Enabled across entire frequency range.

Table 4.12 HVAC Fan: User Parameters (A2-01 to A2-16)

No.	Parameter Name	No.	Parameter Name
b1-01	Frequency Reference Selection 1	d2-02	Frequency Reference Lower Limit
b1-02	Run Command Selection 1	E1-03	V/f Pattern Selection
b1-03	Stopping Method Selection	E1-04	Maximum Output Frequency
b1-04	Reverse Operation Selection	E2-01	Motor Rated Current
C1-01	Acceleration Time 1	H3-11	Terminal A2 Gain Setting
C1-02	Deceleration Time 1	H3-12	Terminal A2 Setting Bias
C6-02	Carrier Frequency Selection	L2-01	Momentary Power Loss Operation Selection
d2-01	Frequency Reference Upper Limit	o4-12	kWh Monitor Initialization

◆ Setting 5: Compressor Application

Table 4.13 Compressor: Parameter Settings

No.	Parameter Name	Default Setting
A1-02	Control Method Selection	0: V/f Control
b1-04	Reverse Operation Selection	1: Reverse Prohibited
C1-01	Acceleration Time 1	5.0 s
C1-02	Deceleration Time 1	5.0 s
C6-01	Duty Rating	0: Heavy Duty (HD)
E1-03	V/f Pattern Selection	F: V/f Pattern Selection
L2-01	Momentary Power Loss Operation Selection	1: Enabled
L3-04	Stall Prevention Selection during Deceleration	1: Enabled

Table 4.14 Compressor: User Parameters (A2-01 to A2-16):

No.	Parameter Name	No.	Parameter Name
b1-01	Frequency Reference Selection	E1-03	V/f Pattern Selection
b1-02	Run Command Selection	E1-07	Mid Output Frequency
b1-04	Reverse Operation Selection	E1-08	Mid Output Frequency Voltage
C1-01	Acceleration Time 1	E2-01	Motor Rated Current
C1-02	Deceleration Time 1	–	–

4.7 Auto-Tuning

◆ Types of Auto-Tuning

The drive offers different types of Auto-Tuning for induction motors and permanent magnet motors. The type of Auto-Tuning used differs further based on the control mode and other operating conditions. Refer to the tables below to select the type of Auto-Tuning that bests suits the application. *Refer to Start-Up Flowcharts on page 166* for directions on executing Auto-Tuning.

Note: The drive will only show Auto-Tuning parameters that are valid for the control mode that has been set in A1-02. If the control mode is for an induction motor, the Auto-Tuning parameters for PM motors will not be available. If the control mode is for a PM motor, the Auto-Tuning parameters for induction motors will not be available. Inertia Tuning and ASR Gain Tuning parameters and setting options will be visible only when the drive is set for operation with CLV or CLV/PM.

■ Auto-Tuning for Induction Motors

This feature automatically sets the V/f pattern and motor parameters E1-□□ and E2-□□ (E3-□□, E4-□□ for motor 2) for an induction motor. Additionally, the feature also sets some F1-□□ parameters for speed feedback detection in Closed Loop Vector.

Table 4.15 Types of Auto-Tuning for Induction Motors

Type	Setting	Application Conditions and Benefits	Control Mode			
			V/f	V/f w/ PG	OLV	CLV
Rotational Auto-Tuning	T1-01 = 0	• Motor can be decoupled from the load and rotate freely while Auto-Tuning is performed. • Motor and load cannot be decoupled but the motor load is below 30%. • Rotational Auto-Tuning gives the most accurate results, and is recommended if possible.	–	–	YES	YES
Stationary Auto-Tuning 1	T1-01 = 1	• Motor and load cannot be decoupled and the load is higher than 30%. • A motor test report listing motor data is not available. • Automatically calculates motor parameters needed for vector control.	–	–	YES	YES
Stationary Auto-Tuning 2	T1-01 = 4	• Motor and load cannot be decoupled and the load is higher than 30%. • A motor test report is available. After entering the no-load current and the rated slip, the drive calculates and sets all other motor-related parameters.	–	–	YES	YES
Stationary Auto-Tuning for Line-to-Line Resistance	T1-01 = 2	• The drive is used in V/f Control and other Auto-Tuning selections are not possible. • Drive and motor capacities differ. • Tunes the drive after the cable between the drive and motor has been replaced with a cable over 50 m long. Assumes Auto-Tuning has already been performed. • Should not be used for any vector control modes unless the motor cable has changed.	YES	YES	YES	YES
Rotational Auto-Tuning for V/f Control	T1-01 = 3	• Recommended for applications using Speed Estimation Speed Search or using the Energy Saving function in V/f Control. • Assumes motor can rotate while Auto-Tuning is executed. Increases accuracy for certain functions like torque compensation, slip compensation, Energy Saving, and Speed Search.	YES	YES	–	–
Stationary Auto-Tuning 3	T1-01 = 5	• A motor test report listing motor data is not available. • Motor can be driven with a normal duty mode after Auto-Tuning. A trial run is performed after Auto-Tuning to automatically calculate motor parameters needed for vector control.	–	–	YES	YES

Table 4.16 lists the data that must be entered for Auto-Tuning. Make sure this data is available before starting Auto-Tuning. The necessary information is usually listed on the motor nameplate or in the motor test report provided by the motor manufacturer. *Refer to Subchart A-1: Simple Motor Setup Using V/f Control on page 168* and *Refer to Subchart A-2: High Performance Operation Using OLV or CLV on page 169* for details on Auto-Tuning processes and selections.

Table 4.16 Auto-Tuning Input Data

Input Value	Input Parameter	Unit	Tuning Type (T1-01)					
			0 Standard	1 Stationary 1	2 Line-to-Line Resistance	3 Rotational for V/f Control	4 Stationary 2	5 Stationary 3
Control Mode	**A1-02**	**–**	**2, 3**	**2, 3**	**0, 1, 2, 3**	**0, 1**	**2, 3**	**2, 3**
Motor rated power	T1-02	kW	YES	YES	YES	YES	YES	YES
Motor rated voltage	T1-03	Vac	YES	YES	–	YES	YES	YES
Motor rated current	T1-04	A	YES	YES	YES	YES	YES	YES
Motor rated frequency	T1-05	Hz	YES	YES	–	YES	YES	YES
Number of motor poles	T1-06	-	YES	YES	–	YES	YES	YES
Motor rated Speed	T1-07	r/min	YES	YES	–	YES	YES	YES
PG Number of pulses per revolution	T1-08	-	YES <1>	YES <1>	–	–	YES <1>	YES <1>
Motor no-load current	T1-09	A	–	YES <2>	–	–	YES	YES
Motor rated Slip	T1-10	Hz	–	–	–	–	YES	–
Motor iron loss	T1-11	W	–	–	–	YES	–	–

<1> Input data is needed for CLV/PM only.

<2> Motor no-load current is required. If the no-load current is not shown on the motor nameplate, use the default value. The default value is set for Yaskawa standard motors.

■ Auto-Tuning for Permanent Magnet Motors

Automatically sets the V/f pattern and motor parameters E1-□□ and E5-□□ when a PM motor is used. Additionally, the feature also sets some F1-□□ parameters for speed feedback detection in Closed Loop Vector.

Table 4.17 Types of Auto-Tuning for Permanent Magnet Motors

Type	Setting	Application Conditions and Benefits	Control Mode		
			OLV/PM	AOLV/PM	CLV/PM
PM Motor Parameter Settings	T2-01 = 0	• Motor does not rotate during Auto-Tuning. • Motor data similar to *Table 4.18* are available from test report or motor nameplate.	YES	YES	YES
PM Stationary Auto-Tuning	T2-01 = 1	• A motor test report listing motor data is not available. • Drive automatically calculates and sets motor parameters.	YES	YES	YES
PM Stationary Auto-Tuning for Stator Resistance	T2-01 = 2	• Useful to tune the drive when the motor data were set up manually or by motor code and the cable is longer than 50 m. • Should also be performed if the cable length has changed after prior tuning.	YES	YES	YES
Z Pulse Offset Tuning	T2-01 = 3	• PG encoder has been replaced. Calculates the Z Pulse offset. • Requires the motor to rotate with no load or very low load.	–	–	YES
Back EMF Constant Tuning	T2-01 = 11	• Use when a motor test is not available. • Tunes the motor induction voltage only. • Should be performed after motor data are set and the encoder offset is adjusted. • The motor must be uncoupled from the mechanical system (remove loads).	–	–	YES
High Frequency Injection Parameter Tuning	T2-01 = 13	• Perform High Frequency Injection Parameter Tuning after setting motor parameters. *Refer to Auto-Tuning for Permanent Magnet Motors on page 177* for details. • The motor rotated in reverse or STo fault (Motor Step-Out) occurred at startup in OLV/PM. • Low speed and insufficient or no torque after activating the high frequency injection control (n8-57 = 1) in AOLV/PM. **Note:** High Frequency Injection cannot be used with an SPM motor.	–	YES	YES

Type	Setting	Application Conditions and Benefits	Control Mode		
			OLV/PM	AOLV/PM	CLV/PM
PM Rotational Auto-Tuning	T2-01 = 14	• A motor test report listing motor data is not available. • Motor can be decoupled from the load and rotate freely while Auto-Tuning is performed. Drive automatically calculates and sets motor parameters. • PM Rotational Auto-Tuning gives more accurate results than Stationary Auto-Tuning.	YES	YES	YES

Table 4.18 lists the data that must be entered for Auto-Tuning. Make sure the data is available before starting Auto-Tuning. The necessary information is usually listed on the motor nameplate or in the motor test report provided by the motor manufacturer. *Refer to Subchart A-3: Operation with Permanent Magnet Motors on page 170* for details on the Auto-Tuning process and selection.

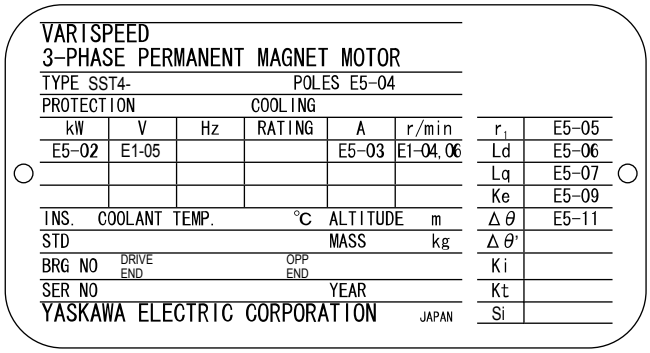

Figure 4.12 Motor Nameplate Example

Table 4.18 Auto-Tuning Input Data

Input Value	Input Param.	Unit	Tuning Type (T2-01)											
			0 Motor Parameter Settings			1 Stationary		2 Stationary Stator Resis.	3 Z-Pulse Offset	11 Back EMF Const.	13 High Freq. Injection	14 Rotational		
Control Mode	**A1-02**	**–**	**5, 6, 7**	**5**	**6, 7**	**5**	**6, 7**	**5, 6, 7**	**7**	**7**	**6, 7**	**5**	**6**	**7**
Motor Code (Hex.)	**T2-02**	**–**	**<1>**	**<1>**	**<1>**	**–**	**–**	**–**	**–**	**–**	**–**	**–**	**–**	**–**
Motor Type	T2-03	–	–	–	–	YES	YES	–	–	–	–	YES	YES	YES
Motor Rated Power	T2-04	kW	–	YES	YES	YES	YES	–	–	–	–	YES	YES	YES
Motor Rated Voltage	T2-05	Vac	–	YES	YES	YES	YES	–	–	–	–	YES	YES	YES
Motor Rated Current	T2-06	A	–	YES	YES	YES	YES	YES	–	–	–	YES	YES	YES
Motor Rated Frequency	T2-07	Hz	–	YES	–	YES	–	–	–	–	–	YES	–	–
Number of Motor Poles	T2-08	–	–	YES	YES	YES	YES	–	–	–	–	YES	YES	YES
Motor Rated Speed	T2-09	r/min	–	–	YES	–	YES	–	–	–	–	–	YES	YES
Stator Single-phase Resistance	T2-10	Ω	YES	YES	YES	–	–	–	–	–	–	–	–	–
d-Axis Inductance	T2-11	mH	YES	YES	YES	–	–	–	–	–	–	–	–	–
q-Axis Inductance	T2-12	mH	YES	YES	YES	–	–	–	–	–	–	–	–	–
Induced Voltage Constant Unit Selection	T2-13	mVs/rad (elec.)	YES	YES	YES	–	–	–	–	–	–	–	–	–
Voltage Constant <3>	T2-14	mVmin (mech.)	YES	YES	YES	–	–	–	–	–	–	–	–	–
Tuning Pull-in Current	T2-15	%	–	–	–	YES	YES	–	–	–	–	YES	YES	YES

Input Value	Input Param.	Unit	Tuning Type (T2-01)											
			0 Motor Parameter Settings			1 Stationary		2 Stationary Stator Resis.	3 Z-Pulse Offset	11 Back EMF Const.	13 High Freq. Injection	14 Rotational		
Control Mode	**A1-02**	**–**	**5, 6, 7**	**5**	**6, 7**	**5**	**6, 7**	**5, 6, 7**	**7**	**7**	**6, 7**	**5**	**6**	**7**
Motor Code (Hex.)	**T2-02**	**–**	<1>	<1>	<1>	**–**	**–**	**–**	**–**	**–**	**–**	**–**	**–**	**–**
PG Number of Pulses Per Revolution	T2-16	ppr	YES <2>	–	YES <2>	–	YES <2>	–	–	–	–	–	–	YES
Z Pulse Offset	T2-17	deg (mech.)	YES <2>	–	YES <2>	–	YES <2>	–	–	–	–	–	–	–

<1> Input the motor code when using a Yaskawa motor. Select "FFFF" when using a motor from another manufacturer.

<2> Input data is needed for CLV/PM only.

<3> Dependent upon T2-13 setting.

■ Inertia Tuning and Speed Control Loop Auto-Tuning

Inertia Tuning can be performed when the drive is using CLV control for either IM or PM motors. Inertia Tuning automatically calculates load and motor inertia, and optimizes settings related to the KEB Ride-Thru function (KEB 2) and Feed Forward control.

ASR Gain Auto-Tuning performs the same operation as Inertia Tuning, while also optimizing speed control loop settings.

Table 4.19 Inertia and Speed Control Loop Tuning

Type	Setting		Control Mode	Application Conditions and Benefits
Inertia Tuning	IM Motor	T1-01 = 8	CLV	Allows the motor to rotate at a certain speed and applies a test signal. The response to the test signal is analyzed and the necessary adjustments are made to parameters controlling the Feed Forward and KEB Ride-Thru functions (KEB 2, L2-29 = 1).
	PM Motor	T2-01 = 8	CLV/PM	
ASR Gain Auto-Tuning	IM Motor	T1-01 = 9	CLV	Performs the same operation as Inertia Tuning, while also adjusting the ASR gain according to the test signal response.
	PM Motor	T2-01 = 9	CLV/PM	

Note: Inertia Tuning and ASR Gain Auto-Tuning may not be available when gears are between the machine and the motor shaft.

Table 4.20 explains the data that must be entered to perform the Inertia Tuning and ASR Gain Auto-Tuning. *Refer to Auto-Tuning for Permanent Magnet Motors on page 177* for details.

Table 4.20 Auto-Tuning Input Data

Input Value	Input Parameter	Unit	Tuning Type (T1-01 or T2-01)	
			8 Inertia Tuning	9 ASR Gain Tuning
Control Mode	**A1-02**	**–**	**3, 7**	**3, 7**
Test signal frequency	T3-01	Hz	YES	YES
Test signal amplitude	T3-02	rad	YES	YES
Motor inertia	T3-03	kgm^2	YES	YES
System response frequency	T3-04	Hz	–	YES

◆ Before Auto-Tuning the Drive

Check the items below before Auto-Tuning the drive.

■ Basic Auto-Tuning Preparations

- Auto-Tuning requires the user to input data from the motor nameplate or motor test report. Make sure this data is available before Auto-Tuning the drive.
- For best performance, the drive input supply voltage must be at least equal to or greater than the motor rated voltage.

  Note: Better performance is possible when using a motor with a base voltage that is lower than the input supply voltage (20 V for 200 V class models, 40 V for 400 V class models, and 60 V for 600 V class models). This is particularly important when operating the motor above 90% of base speed, where high torque precision is required.
- To cancel Auto-Tuning, press the STOP key on the digital operator.

- When using a motor contactor, make sure it is closed throughout the Auto-Tuning process.
- When using Auto-Tuning for motor 2, make sure motor 2 is connected to the drive output when performing the tuning.

Table 4.21 describes digital input and output terminal operation while Auto-Tuning is executed.

Table 4.21 Auto-Tuning Input Data

Motor Type	Auto-Tuning Type	Digital Input	Digital Output
IM Motor	Rotational Auto-Tuning	Digital input functions are disabled.	Functions the same as during normal operation.
	Stationary Auto-Tuning 1		Maintains the status at the start of Auto-Tuning.
	Stationary Auto-Tuning 2		
	Stationary Auto-Tuning for Line-to-Line Resistance		
	Rotational Auto-Tuning for V/f Control		Functions the same as during normal operation.
	Stationary Auto-Tuning 3		Maintains the status at the start of Auto-Tuning.
PM Motor	PM Motor Parameter Settings		Digital output functions are disabled.
	PM Stationary Auto-Tuning		Maintains the status at the start of Auto-Tuning.
	PM Stationary Auto-Tuning for Stator Resistance		
	Z Pulse Offset Tuning		
	Back EMF Constant Tuning		Functions the same as during normal operation.
	High Frequency Injection Parameter Tuning		Digital output functions are disabled.
	PM Rotational Auto-Tuning		Functions the same as during normal operation.
IM and PM Motors	Inertia Tuning		Functions the same as during normal operation.
	ASR Gain Auto-Tuning		

WARNING! *Sudden Movement Hazard. Ensure that the motor and the load are not connected when performing Auto-Tuning. Failure to comply may cause damage to equipment or injury to personnel.*

WARNING! *Electrical Shock Hazard. When executing Auto-Tuning, voltage is applied to the motor before the motor rotates. Do not touch the motor until Auto-Tuning is completed. Failure to comply may result in injury or death from electrical shock. If PM Rotational Auto-Tuning is performed, the motor will remain stopped for approximately one minute with power applied and then the motor will rotate for one minute.*

■ Notes on Rotational Auto-Tuning

- Decouple the load from the motor to achieve optimal performance from Rotational Auto-Tuning. Rotational Auto-Tuning is best suited for applications requiring high performance over a wide speed range.
- If it is not possible to decouple the motor and load, reduce the load so it is less than 30% of the rated load. Performing Rotational Auto-Tuning with a higher load will set motor parameters incorrectly, and can cause irregular motor rotation.
- Ensure the motor-mounted brake is fully released, if installed.
- Connected machinery should be allowed to rotate the motor.

■ Notes on Stationary Auto-Tuning

Stationary Auto-Tuning modes analyze motor characteristics by injecting current into the motor for approximately one minute.

WARNING! *Electrical Shock Hazard. When executing stationary Auto-Tuning, voltage is applied to the motor before the motor rotates. Do not touch the motor until Auto-Tuning is completed. Failure to comply may result in injury or death from electrical shock.*

WARNING! *Sudden Movement Hazard. If installed, do not release the mechanical brake during Stationary Auto-Tuning. Inadvertent brake release may cause damage to equipment or injury to personnel. Ensure that the mechanical brake release circuit is not controlled by the drive multi-function digital outputs.*

Stationary Auto-Tuning 1 and 2

- Perform when using a vector control mode and Rotational Auto-Tuning cannot be performed.
- Check the area around the motor to ensure that nothing will accidentally cause the motor to rotate during the Auto-Tuning process.
- Use Stationary Auto-Tuning 1 when the motor test report is not available. Use Stationary Auto-Tuning 2 when the motor test report is available.

Stationary Auto-Tuning 3

WARNING! *Electrical Shock Hazard. When executing Stationary Auto-Tuning 3, voltage is applied to the motor before the motor rotates. Do not touch the motor until Auto-Tuning is completed. Failure to comply may result in injury from electrical shock.*

WARNING! *Sudden Movement Hazard. If installed, do not release the mechanical brake during Stationary Auto-Tuning 3. Inadvertent brake release may cause damage to equipment or injury to personnel. Ensure that the mechanical brake release circuit is not controlled by the drive multi-function digital outputs.*

Stationary Auto-Tuning 3 can be used in either OLV or CLV control by setting T1-01 to 5 and entering the input data from the motor nameplate. Pressing the RUN key stops the motor for approximately one minute to automatically calculate the necessary motor parameters. Motor parameters E2-02 and E2-03 are set automatically when using the motor for the first time in Drive Mode after Auto-Tuning has been performed.

After performing Stationary Auto-Tuning 3, make sure the following conditions are met and use the following procedures to perform the operation in test mode:

1. 1. Check the E2-02 and E2-03 values in Verify Mode or Parameter Setting Mode.

2. Operate the motor in Drive Mode with the following conditions:
Do not disconnect the wiring between the motor and drive.
Do not lock the motor shaft with a mechanical brake or other device.
The maximum motor load should be 30% of the rated load.
Maintain a constant speed of 30% of E1-06 (base frequency, default value = maximum frequency) or higher for one second or longer.

3. After the motor is stopped, recheck the E2-02 and E2-03 values in Verify Mode or Parameter Setting Mode.

4. Confirm that the input data is correct.

Note:
1. If the aforementioned conditions are not met before using the motor for the first time, there will be large discrepancies between the values set for the motor rated slip (E2-02), motor no-load current (E2-03), the motor test report, and the default values based on o2-04, Drive Model Selection and C6-01, Drive Duty Rating.
2. If midway initialization is performed, restart the entire tuning procedure from the beginning.
3. Use the following guidelines for a general-purpose motor: Motor rated slip (E2-02): 0.5 Hz to 3 Hz; Motor no-load current (E2-03): 30% to 65% of the rated current. Generally speaking, for larger motor capacities, the rated slip is smaller and the no-load current as a percentage of the rated current is smaller. ***Refer to Defaults by Drive Model and Duty Rating ND/HD on page 663*** for details.

Stationary Auto-Tuning for Line-to-Line Resistance and PM Motor Stator Resistance

- Perform when entering motor data manually while using motor cables longer than 50 m.
- If the motor cables have been replaced with cables more than 50 m long after Auto-Tuning has already been performed, use Stationary Auto-Tuning for line-to-line resistance.

WARNING! *Electrical Shock Hazard. When executing Stationary Auto-Tuning for Line-to-line resistance, voltage is applied to the motor even before it rotates. Do not touch the motor until Auto-Tuning is completed. Failure to comply may result in injury or death from electrical shock.*

■ Notes on Inertia Tuning and ASR Gain Auto-Tuning

WARNING! *Electrical Shock Hazard. When executing Inertia Tuning or ASR Gain Auto-Tuning, voltage is applied to the motor even before it rotates. Do not touch the motor until Auto-Tuning is completed. Failure to comply may result in injury or death from electrical shock.*

- Perform both tuning methods with the machine connected to the motor, but without the load applied.
- The motor will rotate during the Auto-Tuning process. Make sure the areas around the motor and connected machinery are clear.
- The drive will let the system rotate at a certain speed while superimposing a sine wave test signal. Make sure this tuning process does not cause any problem or malfunction in the machine before using it.
- Ensure the motor-mounted brake is fully released if installed.
- Connected machinery should be allowed to rotate the motor.

◆ Auto-Tuning Interruption and Fault Codes

If tuning results are abnormal or the STOP key is pressed before completion, Auto-Tuning will be interrupted and a fault code will appear on the digital operator.

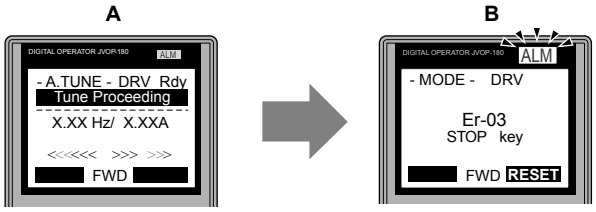

A – During Auto-Tuning **B – Auto-Tuning Aborted**

Figure 4.13 Auto-Tuning Aborted Display

◆ Auto-Tuning Operation Example

The following example demonstrates Rotational Auto-Tuning when using OLV (A1-02 = 2) and CLV (A1-02 = 3).

■ Selecting the Type of Auto-Tuning

	Step		Display/Result
1.	Turn on the power to the drive. The initial display appears.	➡	- MODE - DRV Rdy FREF (OPR) U1-01= 0.00Hz U1-02= 0.00Hz LSEQ U1-03= 0.00A LREF JOG FWD FWD/REV
2.	Press ∧ or ∨ until the Auto-Tuning display appears.	➡	- MODE - PRG Auto-Tuning AUTO HELP FWD DATA
3.	Press ENTER to begin setting parameters.	➡	- A.TUNE - PRG Rdy Tuning Mode Sel T1-01= 0 *0* StandardTuning ESC FWD DATA
4.	Press ENTER to display the value for T1-01. <1>	➡	- A.TUNE - PRG Rdy Tuning Mode Sel T1-01= 0 *0* StandardTuning "0" ← FWD →
5.	Save the setting by pressing ENTER.	➡	Entry Accepted
6.	The display automatically returns to the display shown in Step 3.	➡	- A.TUNE - PRG Rdy Tuning Mode Sel T1-01= 0 *0* StandardTuning ESC FWD DATA

<1> T1-00 will appear on the display when one of the multi-function inputs has been set to switch between motor 1 and motor 2 (H1-□□ = 16).

■ Enter Data from the Motor Nameplate

After selecting the type of Auto-Tuning, enter the data required from the motor nameplate.

Note: These instructions continue from Step 6 in "Selecting the Type of Auto-Tuning".

	Step		Display/Result
1.	Press ∧ to access the motor output power parameter T1-02.	➡	- A.TUNE - PRG Rdy Mtr Rated Power T1-02= 0.75kW (0.00 ~ 650.00) "0.75kW" ESC FWD DATA
2.	Press ENTER to view the default setting.	➡	- A.TUNE - PRG Rdy Mtr Rated Power T1-02= 000.75kW (0.00 ~ 650.00) "0.75kW" ← FWD →
3.	Press F1 (left), F2 (right), RESET, ∧, and ∨ to enter the motor power nameplate data in kW.	➡	- A.TUNE - PRG Rdy Mtr Rated Power T1-02= 000.40kW (0.00 ~ 650.00) "0.75kW" ← FWD →
4.	Press ENTER to save the setting.	➡	Entry Accepted

Step			Display/Result
5.	The display automatically returns to the display in Step 1.	➡	- A.TUNE - PRG Rdy Mtr Rated Power T1-02= 0.40kW (0.00 ~ 650.00) “0.75kW” ESC FWD DATA
6.	Repeat Steps 1 through 5 to set the following parameters: • T1-03, Motor Rated Voltage • T1-04, Motor Rated Current • T1-05, Motor Base Frequency • T1-06, Number of Motor Poles • T1-07, Motor Base Frequency • T1-09, Motor No-Load Current (Stationary Auto-Tuning 1 or 2 only) • T1-10, Motor Rated Slip (Stationary Auto-Tuning 2 only)	➡	- A.TUNE - PRG Rated Voltage T1-03= 200.0VAC (0.0 ~ 255.0) “200.0VAC” ESC FWD DATA ⋮ - A.TUNE - PRG Mtr Rated Slip T1-10= X.XX Hz (0.00 ~ 20.00) “X.XX Hz” ESC FWD DATA

Note: **1.** For details on each setting, ***Refer to T1: Parameter Settings during Induction Motor Auto-Tuning on page 183***.
2. To execute Stationary Auto-Tuning for line-to-line resistance only, set parameters T1-02 and T1-04.

■ Starting Auto-Tuning

WARNING! *Sudden Movement Hazard. The drive and motor may start unexpectedly during Auto-Tuning, which could result in death or serious injury. Ensure the area surrounding the drive motor and load are clear before proceeding with Auto-Tuning.*

WARNING! *Electrical Shock Hazard. High voltage will be supplied to the motor when Stationary Auto-Tuning is performed even with the motor stopped, which could result in death or serious injury. Do not touch the motor until Auto-Tuning has been completed.*

NOTICE: *Rotational Auto-Tuning will not function properly if a holding brake is engaged on the load. Failure to comply could result in improper operation of the drive. Ensure the motor can freely spin before beginning Auto-Tuning.*

Enter the required information from the motor nameplate. Press ∧ to proceed to the Auto-Tuning start display.

Note: These instructions continue from Step 6 in “Enter Data from the Motor Nameplate”.

Step			Display/Result
1.	After entering the data listed on the motor nameplate, press ∧ to confirm.	➡	- A.TUNE - DRV Rdy Auto-Tuning 0.00 Hz/ 0.00A Tuning Ready ? Press RUN key ESC FWD
2.	Press RUN to activate Auto-Tuning. DRV flashes. The drive begins by injecting current into the motor for about 1 min, and then starts to rotate the motor. **Note:** The first digit on the display indicates which motor is undergoing Auto-Tuning (motor 1 or motor 2). The second digit indicates the type of Auto-Tuning being performed.	➡	- A.TUNE - DRV Rdy Tune Proceeding X.XX Hz/ X.XXA <<<<<< >>> >>> FWD
3.	Auto-Tuning finishes in approximately one to two minutes.	➡	- MODE - DRV End Tune Successful FWD RESET

◆ T1: Parameter Settings during Induction Motor Auto-Tuning

The T1-□□ parameters set the Auto-Tuning input data for induction motor tuning.

Note: For motors operating in the field weakening range, first perform the Auto-Tuning with the base data. After Auto-Tuning is complete, change E1-04, Maximum Output Frequency, to the desired value.

■ T1-00: Motor 1/Motor 2 Selection

Selects the motor to be tuned when motor 1/2 switching is enabled (i.e., a digital input is set for function H1-□□ = 16). This parameter is not displayed if motor 1/2 switching is disabled.

No.	Name	Setting Range	Default
T1-00	Motor 1/Motor 2 Selection	1, 2	1

Setting 1: Motor 1

Auto-Tuning automatically sets parameters E1-□□ and E2-□□ for motor 1.

Setting 2: Motor 2

Auto-Tuning automatically sets parameters E3-□□ and E4-□□ for motor 2. Make sure that motor 2 is connected to the drive for Auto-Tuning.

■ T1-01: Auto-Tuning Mode Selection

Sets the type of Auto-Tuning to be used. *Refer to Auto-Tuning for Induction Motors on page 176* for details on the different types of Auto-Tuning.

No.	Name	Setting Range	Default
T1-01	Auto-Tuning Mode Selection	V/f: 2, 3 V/f w/PG: 2, 3 OLV: 0, 1, 2, 4, 5 CLV: 0, 1, 2, 4, 5, 8, 9	V/f, V/f w/PG: 2 OLV, CLV: 0

Setting 0: Rotational Auto-Tuning

Setting 1: Stationary Auto-Tuning 1

Setting 2: Stationary Auto-Tuning for Line-to-Line Resistance

Setting 3: Rotational Auto-Tuning for V/f Control

Setting 4: Stationary Auto-Tuning 2

Setting 5: Stationary Auto-Tuning 3

Note: Stationary Auto-Tuning 3 is not available in models 4A0930 and 4A1200.

Setting 8: Inertia Tuning

Setting 9: ASR Gain Auto-Tuning

Note: Inertia Tuning and ASR Gain Auto-Tuning may not be available when gears are between the machine and the motor shaft.

■ T1-02: Motor Rated Power

Sets the motor rated power according to the motor nameplate value.

No.	Name	Setting Range	Default
T1-02	Motor Rated Power	0.00 to 650.00 kW	Determined by o2-04 and C6-01

■ T1-03: Motor Rated Voltage

Sets the motor rated voltage according to the motor nameplate value. Enter the voltage base speed here if the motor is operating above base speed.

Enter the voltage needed to operate the motor under no-load conditions at rated speed to T1-03 for better control precision around rated speed when using a vector control mode. The no-load voltage can usually be found in the motor test report available from the manufacturer. If the motor test report is not available, enter approximately 90% of the rated voltage printed on the motor nameplate. This may increase the output current and reduce the overload margin.

No.	Name	Setting Range	Default
T1-03	Motor Rated Voltage	0.0 to 255.5 V <1>	200.0 V <1>

<1> Values shown are specific to 200 V class drives. Double value for 400 V class drives. Multiply value by 2.875 for 600 V class drives.

■ T1-04: Motor Rated Current

Sets the motor rated current according to the motor nameplate value. Set the motor rated current between 50% and 100% of the drive rated current for optimal performance in OLV or CLV. Enter the current at the motor base speed.

No.	Name	Setting Range	Default
T1-04	Motor Rated Current	10 to 200% of drive rated current	o2-04

■ T1-05: Motor Base Frequency

Sets the motor rated frequency according to the motor nameplate value. If a motor with an extended speed range is used or the motor is used in the field weakening area, enter the maximum frequency to E1-04 (E3-04 for motor 2) after Auto-Tuning is complete.

No.	Name	Setting Range	Default
T1-05	Motor Base Frequency	0.0 to 400.0 Hz	60.0 Hz

■ T1-06: Number of Motor Poles

Sets the number of motor poles according to the motor nameplate value.

No.	Name	Setting Range	Default
T1-06	Number of Motor Poles	2 to 48	4

■ T1-07: Motor Base Speed

Sets the motor rated speed according to the motor nameplate value. Enter the speed at base frequency when using a motor with an extended speed range or if using the motor in the field weakening area.

No.	Name	Setting Range	Default
T1-07	Motor Base Speed	0 to 24000 r/min	1750 r/min

■ T1-08: PG Number of Pulses Per Revolution

Sets the number of pulses from the PG encoder. Set the actual number of pulses for one full motor rotation.

No.	Name	Setting Range	Default
T1-08	PG Number of Pulses Per Revolution	1 to 60000 ppr	1024 ppr

Note: T1-08 will only be displayed in CLV.

■ T1-09: Motor No-Load Current

Sets the no-load current for the motor. The default setting displayed is no-load current automatically calculated from the output power set in T1-02 and the motor rated current set to T1-04. Enter the data listed on the motor test report. Leave this data at the default setting if the motor test report is not available.

No.	Name	Setting Range	Default
T1-09	Motor No-Load Current	0 A to [T1-04] (Max: 0 to 2999.9) <1>	–

<1> Display is in the following units:
2A0004 to 2A0040, 4A0002 to 4A0023, and 5A0007 to 5A0017: 0.01 A units.
2A0056 to 2A0415, 4A0031 to 4A0675, and 5A0022 to 5A0242: 0.1 A units.
4A0930 and 4A1200: 1 A units.

■ T1-10: Motor Rated Slip

Sets the rated slip for the motor. The default setting displayed is the rated slip for a Yaskawa motor calculated from the rated power set in T1-02. Enter the data listed on the motor test report.

No.	Name	Setting Range	Default
T1-10	Motor Rated Slip	0.00 to 20.00 Hz	–

■ T1-11: Motor Iron Loss

Provides iron loss information to determine the Energy Saving coefficient. T1-11 will first display the value for the motor iron loss that was automatically calculated when motor capacity was entered to T1-02. Enter the motor iron loss value listed to T1-11 if the motor test report is available.

No.	Name	Setting Range	Default
T1-11	Motor Iron Loss	0 to 65535 W	E2-11 (E4-11)

◆ Parameter Settings during PM Motor Auto-Tuning: T2

The T2-□□ parameters are used to set the Auto-Tuning input data for PM motor tuning.

■ T2-01: PM Motor Auto-Tuning Mode Selection

Note: Setting 11 is valid in drive software versions PRG: 1015 and later.

Selects the type of Auto-Tuning to be performed. ***Refer to Auto-Tuning for Permanent Magnet Motors on page 177*** for details on different types of Auto-Tuning.

No.	Name	Setting Range	Default
T2-01	PM Motor Auto-Tuning Mode Selection	OLV/PM: 0, 1, 2, 14 AOLV/PM: 0, 1, 2, 13, 14 CLV/PM: 0, 1, 2, 3, 8, 9, 11, 13, 14	0

Setting 0: PM Motor Parameter Settings

Setting 1: PM Stationary Auto-Tuning

Setting 2: PM Stationary Auto-Tuning for Stator Resistance

Setting 3: Z-Pulse Offset Tuning

Setting 8: Inertia Tuning

Note: Inertia Tuning may not be available when gears are between the machine and the motor shaft.

Setting 9: ASR Gain Auto-Tuning

Note: ASR Gain Auto-Tuning may not be available when gears are between the machine and the motor shaft.

Setting 11: Back EMF Constant Tuning

Note:
1. Back EMF Constant Tuning may not be available when gears are between the machine and the motor shaft.
2. For special-purpose motors, Yaskawa recommends performing Back EMF Constant Tuning after performing Stationary Auto-Tuning. Back EMF Constant Tuning rotates the motor to measure the actual induction voltage constants, which allows for more accurate control than Stationary Auto-Tuning alone.

Setting 13: High Frequency Injection Parameter Tuning

Note: Setting 13 is not available for models 4A0930 and 4A1200.

Setting 14: PM Rotational Auto-Tuning

Note: Setting 14 is not available for models 4A0930 and 4A1200.

■ T2-02: PM Motor Code Selection

If the drive is operating a Yaskawa PM motor from the SMRA, SSR1, or SST4 series, enter the motor code in T2-02 to automatically set parameters T2-03 through T2-09. Use the motor nameplate or motor test report values to set parameters T2-10 to T2-14. If the drive is operating a specialized motor or a motor designed by a manufacturer other than Yaskawa, set T2-02 to FFFF and enter the data from the motor nameplate or the motor test report as prompted.

Only the designated PM motor codes may be entered. The PM motor codes accepted by the drive will differ depending on the selected control mode. ***Refer to E5: PM Motor Settings on page 280*** for motor codes.

No.	Name	Setting Range	Default
T2-02	PM Motor Code Selection	0000 to FFFF	Determined by A1-02 and o2-04

■ T2-03: PM Motor Type

Selects the type of PM motor the drive will operate.

No.	Name	Setting Range	Default
T2-03	PM Motor Type	0, 1	1

Setting 0: IPM motor

Setting 1: SPM motor

■ T2-04: PM Motor Rated Power

Specifies the motor rated power in kilowatts.

No.	Name	Setting Range	Default
T2-04	PM Motor Rated Power	0.00 to 650.00 kW	Determined by o2-04 and C6-01

■ T2-05: PM Motor Rated Voltage

Sets the motor rated voltage.

No.	Name	Setting Range	Default
T2-05	PM Motor Rated Voltage	0.0 to 255.0 V <1>	200.0 V <1>

<1> Value shown is specific to 200 V class drives. Double value for 400 V class drives.

■ T2-06: PM Motor Rated Current

Enter the motor rated current in amps.

No.	Name	Setting Range	Default
T2-06	PM Motor Rated Current	10% to 200% of the drive rated current.	Determined by o2-04

■ T2-07: PM Motor Base Frequency

Enter the motor base frequency in Hz.

Note: T2-07 will be displayed when in OLV/PM.

No.	Name	Setting Range	Default
T2-07	PM Motor Base Frequency	0.0 to 400.0 Hz	87.5 Hz

■ T2-08: Number of PM Motor Poles

Enter the number of motor poles.

No.	Name	Setting Range	Default
T2-08	Number of PM Motor Poles	2 to 48	6

■ T2-09: PM Motor Base Speed

Enter the motor rated speed in r/min.

Note: T2-09 will be displayed when in AOLV/PM and CLV/PM.

No.	Name	Setting Range	Default
T2-09	PM Motor Base Speed	0 to 24000 r/min	1750 r/min

■ T2-10: PM Motor Stator Resistance

Enter the motor stator resistance per motor phase.

No.	Name	Setting Range	Default
T2-10	PM Motor Stator Resistance	0.000 to 65.000 Ω	Determined by T2-02

■ T2-11: PM Motor d-Axis Inductance

Enter the d-Axis inductance per motor phase.

No.	Name	Setting Range	Default
T2-11	PM Motor d-Axis Inductance	0.00 to 600.00 mH	Determined by T2-02

■ T2-12: PM Motor q-Axis Inductance

Enter the q-Axis inductance per motor phase.

No.	Name	Setting Range	Default
T2-12	PM Motor q-Axis Inductance	0.00 to 600.00 mH	Determined by T2-02

■ T2-13: Induced Voltage Constant Unit Selection

Selects the units used for setting the induced voltage coefficient.

No.	Name	Setting Range	Default
T2-13	Induced Voltage Constant Unit Selection	0, 1	1

Setting 0: mV (r/min)

Setting 1: mV (rad/sec)

Note: If T2-13 is set to 0, then the drive will use E5-24 (Motor Induction Voltage Constant 2), and will automatically set E5-09 (Motor Induction Voltage Constant 1 (Ke)) to 0.0. If T2-13 is set to 1, then the drive will use E5-09 and will automatically set E5-25 to 0.0.

■ T2-14: PM Motor Induced Voltage Constant (Ke)

Enter the motor induced voltage constant (Ke).

No.	Name	Setting Range	Default
T2-14	PM Motor Induced Voltage Constant (Ke)	0.0 to 2000.0	Determined by T2-02

■ T2-15: Pull-In Current Level for PM Motor Tuning

Sets the amount of pull-in current used to tune the d-Axis and q-Axis inductance. Set as a percentage of the motor rated current.

No.	Name	Setting Range	Default
T2-15	Pull-In Current Level for PM Motor Tuning	0 to 120%	30%

■ T2-16: PG Number of Pulses Per Revolution for PM Motor Tuning

Enter the number of pulses from the PG encoder per motor rotation. Set the actual number of pulses for one full motor rotation.

No.	Name	Setting Range	Default
T2-16	PG Number of Pulses Per Revolution for PM Motor Tuning	1 to 15000 ppr	1024 ppr

■ T2-17: Encoder Z Pulse Offset (ΔΘ)

Sets the amount of compensation or offset in 0.1 degree units to fine-tune the home position. Perform Z Pulse tuning when the amount of offset needed for the Z Pulse is unknown or if the PG encoder is replaced.

No.	Name	Setting Range	Default
T2-17	Encoder Z Pulse Offset (ΔΘ)	-180.0 to 180.0 deg	0.0 deg

◆ Parameter Settings during Inertia and Speed Control Loop Auto-Tuning: T3

These tuning methods apply a sine wave test signal to the system. The drive estimates the system inertia by the measuring the response and automatically sets the parameters listed in *Table 4.22*.

Table 4.22 Parameters Adjusted by Inertia and Speed Loop Auto-Tuning

Parameter	Description	T1-01 or T2-01	
		8 Inertia Tuning	9 Speed Control Loop (ASR) Tuning
C5-01	ASR Proportional Gain 1	–	YES
C5-17 (C5-37)	Motor Inertia	YES	YES
C5-18 (C5-38)	Motor Inertia Ratio	YES	YES
L3-24	Motor Acceleration Time for Inertia Calculations	YES	YES
L3-25	Load Inertia Ratio	YES	YES
n5-02	Motor Acceleration Time	YES	YES
n5-03	Feed Forward Control Ratio Gain	YES	YES

■ T3-01: Inertia Tuning Frequency Reference

Sets the frequency of the test signal applied to the motor during Inertia Tuning. Although this setting rarely needs to be changed, increasing the value may be beneficial when working with high inertia loads.

No.	Name	Setting Range	Default
T3-01	Inertia Tuning Frequency Reference	0.1 to 20.0 Hz	3.0 Hz

■ T3-02: Inertia Tuning Reference Amplitude

Enter the amplitude of the test signal applied to the motor during Inertia Tuning. Although this setting rarely needs to be changed, decrease the setting if a large load inertia causes problems during Inertia Tuning. Adjust T3-02 if a fault occurs when T3-01 is set to a low value.

No.	Name	Setting Range	Default
T3-02	Inertia Tuning Reference Amplitude	0.1 to 10.0 rad	0.5 rad

■ T3-03: Motor Inertia

Enter the inertia of the motor. This value is used to determine the load inertia using the test signal response. The default setting is for a Yaskawa standard motor as listed in the motor inertia table.

No.	Name	Setting Range	Default
T3-03	Motor Inertia	0.0001 to 600.00 kgm^2	Determined by o2-04, C6-01, E5-01

Note: Capacities 0.1 to 37 kW are set in units of 0.0001 kgm^2. Capacities 5.5 to 45 kW are set in units of 0.001 kgm^2. Capacities 55 kW and above are set in units of 0.01 kgm^2.

■ T3-04: ASR Response Frequency

Sets the response frequency (reciprocal of the step response time constant) of the system or the connected machine. The drive uses this value and the load inertia to fine-tune the speed control loop gain (C5-01, ASR Gain 1). Oscillation may result if the value input here is higher than the actual response frequency of the system.

No.	Name	Setting Range	Default
T3-04	ASR Response Frequency	0.1 to 50.0 Hz	10.0 Hz

4.8 No-Load Operation Test Run

◆ No-Load Operation Test Run

This section explains how to operate the drive with the motor decoupled from the load during a test run.

■ Before Starting the Motor

Check the following items before operation:
- Ensure the area around the motor is safe.
- Ensure external emergency stop circuitry is working properly and other safety precautions have been taken.

■ During Operation

Check the following items during operation:
- The motor should rotate smoothly (i.e., no abnormal noise or oscillation).
- The motor should accelerate and decelerate smoothly.

■ No-Load Operation Instructions

The following example illustrates a test run procedure using the digital operator.

Note: Before starting the motor, set the frequency reference d1-01 to 6 Hz.

Step			Display/Result
1.	Turn on the power to the drive. The initial display appears.	➡	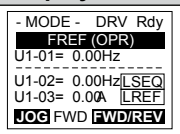
2.	Press LO/RE to select LOCAL. The LO/RE light will turn on.	➡	
3.	Press RUN to give the drive a Run command. RUN will light and the motor will rotate at 6 Hz.	➡	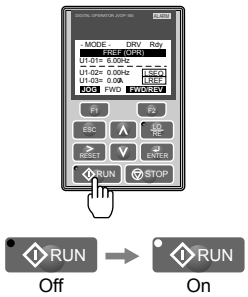
4.	Ensure the motor is rotating in the correct direction and that no faults or alarms occur.	➡	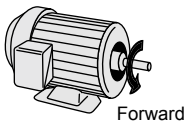
5.	If there is no error in step 4, press ∧ to increase the frequency reference. Increase the frequency in increments of 10 Hz, verifying smooth operation at all speeds. For each frequency, check the drive output current using monitor U1-03. The current should be well below the motor rated current.	–	–

Step			Display/Result
6.	The drive should operate normally. Press STOP to stop the motor. RUN flashes until the motor comes to a complete stop.	➡	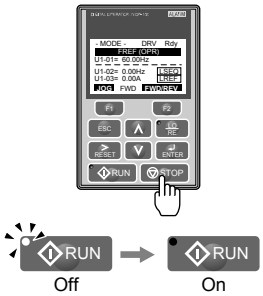

4.9 Test Run with Load Connected

◆ Test Run with the Load Connected

After performing a no-load test run, connect the motor and proceed to run the motor and load together.

■ Precautions for Connected Machinery

WARNING! *Sudden Movement Hazard. Clear all personnel from the drive, motor, and machine area before applying power. System may start unexpectedly upon application of power, causing death or serious injury.*

WARNING! *Sudden Movement Hazard. Always check the operation of any fast stop circuits after they are wired. Fast stop circuits are required to provide safe and quick shutdown of the drive. Prepare to initiate an emergency stop during the test run. Operating a drive with untested emergency circuits could result in death or serious injury.*

- The motor should come to a complete stop without problems.
- Connect the load and machinery to the motor.
- Fasten all installation screws properly and check that the motor and connected machinery are held in place.

■ Checklist Before Operation

- The motor should rotate in the proper direction.
- The motor should accelerate and decelerate smoothly.

■ Operating the Motor under Loaded Conditions

Test run the application similarly to the no-load test procedure when connecting the machinery to the motor.

- Monitor U1-03 for overcurrent during operation.
- If the application permits running the load in the reverse direction, change the motor direction and the frequency reference while watching for abnormal motor oscillation or vibration.
- Correct any problems that occur with hunting, oscillation, and other control-related issues. ***Refer to Motor Performance Fine-Tuning on page 392*** for details.

4.10 Verifying Parameter Settings and Backing Up Changes

Use the Verify Menu to check all changes to parameter settings. *Refer to Verifying Parameter Changes: Verify Menu on page 163*.

It is convenient to check all changes to parameters then save the verified parameters as User parameters.

Change the access level or set a password to the drive to prevent accidental modification of parameter settings.

◆ Backing Up Parameter Values: o2-03

Setting o2-03 to 1 saves all parameter settings before resetting o2-03 to 0. The drive can now recall all the saved parameters by performing a User Initialization (A1-03 = 1110).

No.	Parameter Name	Description	Setting Range	Default Setting
o2-03	User Defaults	Lets the user create a set of default settings for a User Initialization. 0: Saved/Not Set 1: Set Defaults - Saves current parameter settings as the default values for a User Initialization. 2: Clear All - Clears the currently saved user settings. After saving the user parameter set value, the items of 1110 (User Initialization) are displayed in A1-03 (User Parameter Default Value).	0 to 2	0
A1-03	Initialize Parameters	Selects a method to initialize the parameters. 0: No Initialize 1110: User Initialization (The user must first program and store desired settings using parameter o2-03) 2220: 2-Wire Initialization (parameter initialized prior to shipment) 3330: 3-Wire Initialization 5550: oPE4 Fault reset	0 to 5550	0

◆ Parameter Access Level: A1-01

Setting the Access Level for “Operation only” (A1-01 = 0) allows the user to access parameters A1-□□ and U□-□□ only. Other parameters are not displayed.

Setting the Access Level for “User Parameters” (A1-01 = 1) allows the user to access only the parameters that have been previously saved as User Parameters. This is helpful when displaying only the relevant parameters for a specific application.

No.	Parameter Name	Description	Setting Range	Default
A1-01	Access Level Selection	Selects which parameters are accessible via the digital operator. 0: Operation only. A1-01, A1-04, and A1-06 can be set and monitored, and U□-□□parameters can also be viewed. 1: User Parameters. Only parameters A1-00, A1-01, and A1-04, and A2-01 to A2-32 in Setup Mode can be set and monitored. 2: Advanced Access Level. All parameters can be set and monitored.	0 to 2	2
A2-01 to A2-32	User Parameters 1 to 32 <1>	Parameters selected by the user are saved as User Parameters, including recently viewed parameters and parameters specifically selected for quick access. If parameter A2-33 is set to 1, recently viewed parameters will be listed between A2-17 and A2-32. Parameters A2-01 through A2-16 must be manually selected by the user. If A2-33 is set to 0, recently viewed parameters will not be saved to the group of User Parameters. A2-□□ parameters are now available for manual programming.	b1-01 to o□-□□	–
A2-33	User Parameter Automatic Selection <1>	0: Parameters A2-01 through A2-32 are reserved for the user to create a group of User Parameters. 1: Save history of recently viewed parameters. Recently edited parameters will be saved to A2-17 through A2-32 for quick access. The most recently changed parameter is saved to A2-17. The second most recently changed parameter is saved to A2-18, etc.	0, 1	1

<1> Lists all parameters after the last listed parameters when User Parameters are set to parameters A2-17 and higher.
Example: The drive will list parameters A2-21 and higher when User Parameters are listed from A2-01 to A2-20.

◆ Password Settings: A1-04, A1-05

The user can set a password in parameter A1-05 to restrict access to the drive. The password must be entered to A1-04 to unlock parameter access (i.e., parameter setting A1-04 must match the value programmed into A1-05). The following parameters cannot be viewed or edited until the value entered to A1-04 correctly matches the value set to A1-05: A1-01, A1-03, A1-06, A1-07, and A2-01 through A2-32.

Note: Parameter A1-05 is hidden from view. To display A1-05, access parameter A1-04 and press STOP and ∧ simultaneously.

◆ Copy Function

Parameter settings can be copied to another drive to simplify parameter restoration or multiple drive setup. The drive supports the following copy options:

- **LCD Operator (standard in all models)**

  The LCD operator used to operate the drive supports copying, importing, and verifying parameter settings. ***Refer to o3: Copy Function on page 382*** for details.

- **LED Operator**

  The optional LED operator also supports copying, importing, and verifying parameter settings. Refer to the manual supplied with the LED operator for instructions.

- **USB Copy Unit and CopyUnitManager**

  The copy unit is an external option connected to the drive to copy parameter settings from one drive and save those settings to another drive. Refer to the manual supplied with the USB Copy Unit for instructions.

  CopyUnitManager is a PC software tool that allows the user to load parameter settings from the Copy Unit onto a PC, or from the PC onto a Copy Unit. This is useful when managing parameters for various drives or applications. Refer to the manual supplied with CopyUnitManager for instructions.

- **DriveWizard Industrial**

  DriveWizard Industrial is a PC software tool for parameter management, monitoring, and diagnosis. DriveWizard Industrial can load, store, and copy drive parameter settings. For details, refer to Help in the DriveWizard Industrial software.

4.11 Test Run Checklist

Review the checklist before performing a test run. Check each item that applies.

☑	No.	Checklist	Page
☐	1	Thoroughly read the manual before performing a test run.	–
☐	2	Turn the power on.	172
☐	3	Set the voltage for the power supply to E1-01.	270
☐	4	Select the correct duty rating (C6-01) for the application.	–

Check the items that correspond to the control mode being used.

WARNING! *Sudden Movement Hazard. Ensure start/stop and safety circuits are wired properly and in the correct state before energizing the drive. Failure to comply could result in death or serious injury from moving equipment. When programmed for 3-Wire control, a momentary closure on terminal S1 may cause the drive to start.*

☑	No.	Checklist	Page
V/f Control (A1-02 = 0) and V/f Control with PG (A1-02 = 1)			
☐	5	Select the best V/f pattern according to the application and motor characteristics.	–
☐	6	Perform Rotational Auto-Tuning for V/f Control if using Energy Saving functions.	176
V/f Control with PG (A1-02 = 1)			
☐	7	Set up the PG feedback parameters correctly and make sure the encoder pulse counting direction is correct.	283
☐	8	Set the proportional gain for ASR speed control to C5-01 and the integral time to C5-02.	248
Open Loop Vector Control (A1-02 = 2) or Closed Loop Vector Control (A1-02 = 3)			
☐	9	Decouple motor shafts and machines when performing Rotational Auto-Tuning.	183
☐	10	Set the Auto-Tuning mode to T1-01 (0 for Rotational Auto-Tuning).	183
☐	11	Enter the following data according to the information listed on the motor nameplate: • Motor rated power to T1-02 (kW) • Motor rated voltage to T1-03 (V) • Motor rated current to T1-04 (A) • Motor base frequency to T1-05 (Hz) • Number of motor poles to T1-06 • Motor base speed to T1-07 (r/min)	183
Closed Loop Vector Control (A1-02 = 3)			
☐	12	Set F1-01 and F1-05.	–
☐	13	Set ASR proportional gain to C5-01 and ASR integral time to C5-02. Perform ASR Tuning if possible.	248
Open Loop Vector Control for PM (A1-02 = 5)			
☐	14	Perform Auto-Tuning as described.	186
Advanced Open Loop Vector Control for PM (A1-02 = 6)			
☐	15	Perform Auto-Tuning as described.	186
☐	16	Set the proportional gain for ASR speed control to C5-01 and the integral time to C5-02.	248
Closed Loop Vector Control for PM (A1-02 = 7)			
☐	17	Set PM motor data using E5-☐☐ parameters.	186
☐	18	Set ASR proportional gain to C5-01 and ASR integral time to C5-02. Perform ASR Tuning if possible.	248
☐	19	Set F1-01 and F1-05.	–
☐	20	Set the offset between the rotor magnetic axis and the Z-pulse of the connected encoder to E5-11.	186
☐	21	The DRV should be displayed on the LCD operator after giving a Run command.	–
☐	22	To give Run command and frequency reference from the digital operator, press “LO/RE” key to set to LOCAL.	165
☐	23	If the motor rotates in the opposite direction during test run, switch two of U/T1, V/T2, W/T3, or change b1-14.	172
☐	24	In accordance with load condition, set Heavy Duty or Normal Duty mode using parameter C6-01. Normal Duty is the default setting.	–

☑	No.	Checklist	Page
☐	25	Set motor rated current (E2-01, E4-01, E5-03) and motor protection (L1-01) values for motor thermal protection.	–
☐	26	Set the drive for REMOTE when control circuit terminals provide the Run command and frequency reference.	*165*
☐	27	If the control circuit terminals should supply the frequency reference, select the correct voltage input signal level (0 to 10 V or -10 to +10 V) or the correct current input signal level (4 to 20 mA or 0 to 20 mA).	*205*
☐	28	Apply the proper signal level to terminals A1 and A3 (0 to 10 V or -10 to +10 V).	*205*
☐	29	Apply the proper signal level (-10 to +10 V, 4 to 20 mA or 0 to 20 mA) to terminal A2.	*205*
☐	30	When current input is used, switch the built-in DIP switch S1 from the V-side to I-side. Set the level for current signal used to H3-09 (set “2” for 4 to 20 mA, or “3” for 0 to 20 mA).	*205*
☐	31	Set DIP Switch S1 on the drive to “I” when using terminal A2 as current input. Set DIP Switch S1 on the drive to “V” when using terminal A2 as voltage input.	–
☐	32	If an analog input supplies the frequency reference, make sure it produces the desired frequency reference. Make the following adjustments if the drive does not operate as expected: Gain adjustment: Set the maximum voltage/current signal and adjust the analog input gain (H3-03 for A1, H3-11 for A2, H3-07 for A3) until the frequency reference value reaches the desired value. Bias adjustment: Set the minimum voltage/current signal and adjust the analog input bias (H3-04 for A1, H3-12 for A2, H3-08 for A3) until the frequency reference value reaches the desired minimum value.	–

5

Parameter Details

5.1 A: INITIALIZATION....198
5.2 B: APPLICATION....205
5.3 C: TUNING....239
5.4 D: REFERENCE SETTINGS....255
5.5 E: MOTOR PARAMETERS....270
5.6 F: OPTION SETTINGS....283
5.7 H: TERMINAL FUNCTIONS....298
5.8 L: PROTECTION FUNCTIONS....331
5.9 N: SPECIAL ADJUSTMENTS....367
5.10 O: OPERATOR RELATED SETTINGS....379
5.11 U: MONITOR PARAMETERS....386

5.1 A: Initialization

The initialization group contains parameters associated with initial drive setup, including parameters involving the display language, access levels, initialization, and password.

◆ A1: Initialization

■ A1-00: Language Selection

Selects the display language for the digital operator.

Note: This parameter is not reset when the drive is initialized using parameter A1-03.

No.	Parameter Name	Setting Range	Default
A1-00	Language Selection	0 to 12 <1>	0

<1> The setting range is 0 to 7 in models 4A0930 and 4A1200.

Setting 0: English

Setting 1: Japanese

Setting 2: German

Setting 3: French

Setting 4: Italian

Setting 5: Spanish

Setting 6: Portuguese

Setting 7: Chinese

Setting 8: Czech

Setting 9: Russian

Setting 10: Turkish

Setting 11: Polish

Setting 12: Greek

Note: Settings 8 to 12 can only be selected from an LCD operator with version REV: F or later. The version is listed on the back of the LCD operator.

■ A1-01: Access Level Selection

Allows or restricts access to drive parameters.

No.	Parameter Name	Setting Range	Default
A1-01	Access Level Selection	0 to 2	2

Setting 0: Operation only

Allows access and programming of parameters A1-01, A1-04, and Drive Mode.

Allows access to all U monitor parameters.

Does not allow access to Verify Mode, Setup Mode, or Auto-Tuning Mode.

Setting 1: User Parameters

Allows access and programming of parameters A1-00, A1-01, A1-04, and Drive Mode.

Allows access to all U monitor parameters.

Allows access to parameters set in A2-01 to A2-32 in Setup Mode.

Does not allow access to Verify Mode or Auto-Tuning Mode.

Setting 2: Advanced Access Level (A) and Setup Access Level (S)

Allows access and programming of all parameters.

Notes on Parameter Access

- If the drive parameters are password protected by A1-04 and A1-05, parameters A1-01 through A1-03, A1-06, A1-07, and A2-01 through A2-32 cannot be modified.
- If a digital input terminal programmed for "Program lockout" (H1-□□ = 1B) is enabled, parameter values cannot be modified, even if A1-01 is set to 1 or 2.
- If parameters are changed via serial communication, it will not be possible to edit or change parameter settings with the digital operator until an Enter command is issued to the drive from the serial communication.

■ A1-02: Control Method Selection

Selects the Control Method (also referred to as the control mode) that the drive uses to operate the motor. Parameter A1-02 determines the control mode for motor 1 when the drive is set up to run two motors.

Note: When changing control modes, all parameter settings depending upon the setting of A1-02 will be reset to the default.

No.	Parameter Name	Setting Range	Default
A1-02	Control Method Selection	0, 1, 2, 3, 5, 6, 7	2

Control Modes for Induction Motors (IM)

Setting 0: V/f Control for Induction Motors

Use this mode for simple speed control and for multiple motor applications with low demands to dynamic response or speed accuracy. This control mode is also used when the motor parameters are unknown and Auto-Tuning cannot be performed. The speed control range is 1:40.

Setting 1: V/f Control with PG Speed Feedback

Use this mode for general-purpose applications that require high speed accuracy but do not require high dynamic response. This control mode is also used when the motor parameters are unknown and Auto-Tuning cannot be performed. The speed control range is 1:40.

Setting 2: Open Loop Vector Control

Use this mode for general, variable-speed applications with a speed control range of 1:200 that require precise speed control, quick torque response, and high torque at low speed without using a speed feedback signal from the motor.

Setting 3: Closed Loop Vector Control

Use this mode for general, variable-speed applications that require precise speed control down to zero speed, quick torque response or precise torque control, and a speed feedback signal from the motor. The speed control range is up to 1:1500.

Control Modes for Permanent Magnet Motors (SPM or IPM)

Setting 5: Open Loop Vector Control for PM

Use this mode for general, variable-speed applications with low demands on dynamic response or speed accuracy. The drive can control an SPM or IPM motor with a speed range of 1:20 in this control mode.

Setting 6: Advanced Open Loop Vector Control for PM

Use this mode for general, variable speed applications that require precise speed control and torque limit. Set High Frequency Injection parameter n8-57 to 1 to achieve a speed control range as high as 1:100. In this case, perform High Frequency Injection Parameter Tuning after setting the motor parameters. High Frequency Injection cannot be used with an SPM motor. for details.***Refer to T2-02: PM Motor Code Selection on page 186*** and ***Refer to Control Mode Selection on page 32*** for details.

Setting 7: Closed Loop Vector Control for PM

Use this mode for high-precision control of a PM motor in constant torque or variable torque applications. The speed control range reaches 1:1500. A speed feedback signal is required.

■ A1-03: Initialize Parameters

Resets parameters to default values. After initialization, the setting for A1-03 automatically returns to 0.

No.	Parameter Name	Setting Range	Default
A1-03	Initialize Parameters	0, 1110, 2220, 3330, 5550	0

Setting 0: No Initialize

Setting 1110: User Initialize

Resets parameters to the values selected by the user as User Settings. User Settings are stored when parameter o2-03 is set to "1: Set defaults".

Note: User Initialization resets all parameters to a user-defined set of default values previously saved to the drive. Set parameter o2-03 to 2 to clear the user-defined default values.

Setting 2220: 2-Wire Initialization

Resets parameters except parameters listed in ***Table 5.1*** to default settings with digital inputs S1 and S2 configured as Forward run and Reverse run, respectively. ***Refer to Setting 40, 41: Forward Run, Reverse Run Command for 2-Wire Sequence on page 305*** for more information on digital input functions.

Setting 3330: 3-Wire Initialization

Resets parameters except parameters listed in ***Table 5.1*** to default settings with digital inputs S1, S2, and S5 configured as Run, Stop, and Forward/Reverse respectively. ***Refer to Setting 0: 3-Wire Sequence on page 299*** for more information on digital input functions.

Setting 5550: oPE04 Reset

An oPE04 error appears on the digital operator when a terminal block with settings saved to its built-in memory is installed in a drive that has edited parameters. Set A1-03 to 5550 to use the parameter settings saved to the terminal block memory.

Notes on Parameter Initialization

The parameters shown in ***Table 5.1*** will not be reset when the drive is initialized by setting A1-03 = 2220 or 3330. Although the control mode in A1-02 is not reset when A1-03 is set to 2220 or 3330, it may change when an application preset is selected.

Table 5.1 Parameters Not Changed by Drive Initialization

No.	Parameter Name
A1-00	Language Selection
A1-02	Control Method Selection
E1-03	V/f Pattern Selection
E5-01	Motor Code Selection (for PM Motors)
E5-02	Motor Rated Power (for PM Motors)
E5-03	Motor Rated Current (for PM Motors)
E5-04	Number of Motor Poles (for PM Motors)
E5-05	Motor Stator Resistance (r1) (for PM Motors)
E5-06	Motor d-Axis Inductance (Ld) (for PM Motors)
E5-07	Motor d-Axis Inductance (Lq) (for PM Motors)
E5-09	Motor Induction Voltage Constant 1 (Ke) (for PM Motors)
E5-24	Motor Induction Voltage Constant 2 (Ke) (for PM Motors)
F6-□□/F7-□□	Communication Parameters (Initialized when F6-08 = 1)
L8-35	Installation Method Selection
o2-04	Drive Model Selection

■ A1-04, A1-05: Password and Password Setting

Parameter A1-04 enters the password when the drive is locked; parameter A1-05 is a hidden parameter that sets the password.

No.	Parameter Name	Setting Range	Default
A1-04	Password	0000 to 9999	0000
A1-05	Password Setting		

How to Use the Password

The user can set a password in parameter A1-05 to restrict access to the drive. The password must be entered to A1-04 to unlock parameter access (i.e., parameter setting A1-04 must match the value programmed into A1-05). The following parameters cannot be viewed or edited until the value entered to A1-04 correctly matches the value set to A1-05: A1-01, A1-02, A1-03, A1-06, A1-07, and A2-01 through A2-32.

The instructions below demonstrate how to set password "1234". An explanation follows on how to enter that password to unlock the parameters.

Table 5.2 Setting the Password for Parameter Lock

	Step		Display/Result
1.	Turn on the power to the drive. The initial display appears.	➡	- MODE - DRV Rdy Freq Ref (AI) U1-01= 0.00Hz U1-02= 0.00Hz LSEQ U1-03= 0.00 A LREF FWD
2.	Press ∧ or ∨ until the Parameter Setting Mode screen appears.	➡	- MODE - PRG Programming HELP FWD DATA
3.	Press ENTER to enter the parameter menu tree.	➡	-PRMSET- PRG Initialization A1-00= 0 Select Language ← FWD →
4.	Select the flashing digits by pressing F1, F2, or RESET.	➡	-PRMSET- PRG Select Language A1-00= 0 *0* English ← FWD →
5.	Select A1-04 by pressing ∧.	➡	-PRMSET- PRG Enter Password A1- 04 = 0 (0~9999) "0" ← FWD →
6.	Press ∧ while holding down OFF at the same time. A1-05 will appear. **Note:** A1-05 is hidden and will not display by pressing only ∧.	➡	-PRMSET- PRG Select Password A1- 05 = 0 (0~9999) "0" ← FWD →
7.	Press ENTER.	➡	-PRMSET- PRG Select Password A1- 05 = 0000 (0~9999) "0" ← FWD →
8.	Use F1, F2, RESET, ∨ and ∧ to enter the password.	➡	-PRMSET- PRG Select Password A1- 05 = 1234 (0~9999) "0" ← FWD →
9.	Press ENTER to save what was entered.	➡	Entry Accepted
10.	The display automatically returns to the display shown in step 6.	➡	-PRMSET- PRG Select Password A1- 05 = 0 (0~9999) "0" ← FWD →

Table 5.3 Check if A1-02 is Locked (continuing from step 10 above)

	Step		Display/Result
1.	Press ∨ to display A1-02.	➡	-PRMSET- PRG Control Method A1-02= 2 *2* Open Loop Vector ← FWD →
2.	Press ENTER, making sure that the setting values cannot be changed.		

Step			Display/Result
3.	Press ESC to return to the first display.	➡	- MODE - PRG Programming HELP FWD DATA

Table 5.4 Enter the Password to Unlock Parameters (continuing from step 3 above)

Step			Display/Result
1.	Press ENTER to enter the parameter setup display.	➡	-PRMSET- PRG Initialization A1-00= 0 Select Language ← FWD →
2.	Press F1, F2, RESET to select the flashing digits as shown.	➡	-PRMSET- PRG Select Language A1-00= 0 *0* English ← FWD →
3.	Press ∧ to scroll to A1-04 and ENTER.	➡	-PRMSET- PRG Enter Password A1-04 = 0 (0~9999) "0" ← FWD →
4.	Enter the password "1234".	➡	-PRMSET- PRG Enter Password A1-04= 1234 V/f Control ← FWD →
5.	Press ENTER to save the new password.	➡	Entry Accepted
6.	Drive returns to the parameter display.	➡	-PRMSET- PRG Enter Password A1-04 = 0 (0~9999) "0" ← FWD →
7.	Press ∨ and scroll to A1-02.	➡	-PRMSET- PRG Control Method A1-02= 2 *2* Open Loop Vector ← FWD →
8.	Press ENTER to display the value set to A1-02. If the first "0" blinks, parameter settings are unlocked.	➡	-PRMSET- PRG Control Method A1-02= 2 *2* Open Loop Vector ← FWD →
9.	Use RESET and ∧ to change the value if desired (though changing the control mode at this point is not typically done).	➡	-PRMSET- PRG Control Method A1-02= 0 *2* V/F Control "2" ← FWD →
10.	Press ENTER to save the setting, or press ESC to return to the previous display without saving changes.	➡	Entry Accepted
11.	The display automatically returns to the parameter display.	➡	-PRMSET- PRG Control Method A1-02= 0 *0* V/F Control ← FWD →

Note: 1. Parameter settings can be edited after entering the correct password.
2. Performing a 2-Wire or 3-Wire initialization resets the password to "0000".

3. Enter a setting other than the password (e.g., 0000) in A1-04 to use the set password to release the lock and restore the lock with the same password after changing parameter settings.

■ A1-06: Application Preset

Several Application Presets are available to facilitate drive setup for commonly used applications. Selecting one of these Application Presets automatically assigns functions to the input and output terminals and sets a predefined group of parameters to values appropriate for the selected application.

In addition, the parameters most likely to be changed are assigned to the group of User Parameters, A2-01 through A2-16. User Parameters are part of the Setup Group, which provides quicker access by eliminating the need to scroll through multiple menus.

Refer to Application Selection on page 173 for details on parameter A1-06.

■ A1-07: DriveWorksEZ Function Selection

Enables and disables the DriveWorksEZ program inside the drive.

DriveWorksEZ is a software package for customizing drive functionality or adding PLC functionality by the interconnection and configuration of basic software function blocks. The drive performs user-created programs in 1 ms cycles.

Note:
1. If DriveWorksEZ has assigned functions to any of the multi-function output terminals, those functions will remain set to those terminals even after disabling DriveWorksEZ.
2. For more information on DriveWorksEZ, contact Yaskawa or a Yaskawa representative.

No.	Parameter Name	Setting Range	Default
A1-07	DriveWorksEZ Function Selection	0 to 2	0

Setting 0: DWEZ disabled

Setting 1: DWEZ enabled

Setting 2: Digital input

If a digital input is programmed for DWEZ enable/disable (H1-□□ = 9F), DWEZ will be enabled when the input is opened.

◆ A2: User Parameters

■ A2-01 to A2-32: User Parameters 1 to 32

The user can select up to 32 parameters and assign them to parameters A2-01 through A2-32 to provide quicker access by eliminating the need to scroll through multiple menus. The User Parameter list can also save the most recently edited parameters.

No.	Parameter Name	Setting Range	Default
A2-01 to A2-32	User Parameters 1 to 32	b1-01 to o4-13	Determined by A1-06 <1> <2>

<1> Default setting of Setup Mode parameters. *Refer to Setup Group Parameters on page 165* for details.

<2> A1-06 determines how parameters edited by the user are saved to the list of User Parameters, A2-01 through A2-32. *Refer to Application Selection on page 173* for details.

Saving User Parameters

To save specific parameters to A2-01 through A2-32, set parameter A1-01 to 2 to allow access to all parameters, then enter the parameter number to one of the A2-□□ parameters to assign it to the list of User Parameters. Finally, set A1-01 to 1 to restrict access so users can only set and refer to the parameters saved as User Parameters.

■ A2-33: User Parameter Automatic Selection

Determines whether recently edited parameters are saved to the second half of the User Parameters (A2-17 to A2-32) for quicker access.

No.	Parameter Name	Setting Range	Default
A2-33	User Parameter Automatic Selection	0, 1	Determined by A1-06

Setting 0: Do not save list of recently edited parameters

Set A2-33 to 0 to manually select the parameters listed in the User Parameter group.

Setting 1: Save list of recently edited parameters

Set A2-33 to 1 to automatically save recently edited parameters to A2-17 through A2-32. A total of 16 parameters are saved with the most recently edited parameter set to A2-17, the second most recently to A2-18, and so on. Access the User Parameters using the Setup Mode of the digital operator.

Note: User parameters are listed from A2-27 to A2-32. Parameters A2-01 to A2-26 are already listed as defined by default when in Setup Mode.

5.2 b: Application

◆ b1: Operation Mode Selection

■ b1-01: Frequency Reference Selection 1

Selects the frequency reference source 1 for the REMOTE mode.

Note: 1. If a Run command is input to the drive but the frequency reference entered is 0 or below the minimum frequency, the RUN indicator LED on the digital operator will light and the STOP indicator will flash. However, the RUN indicator LED will light in zero speed control when A1-02 is set to 3, 6, or 7.

2. Press the LO/RE key to set the drive to LOCAL and use the operator keypad to enter the frequency reference.

No.	Parameter Name	Setting Range	Default
b1-01	Frequency Reference Selection 1	0 to 4	1

Setting 0: Operator keypad

Input the frequency reference using the operator keypad with this setting.

Setting 1: Terminals (analog input terminals)

Using this setting, an analog frequency reference can be entered as a voltage or current signal from terminals A1, A2, or A3.

Voltage Input

Voltage input can be used at any of the three analog input terminals. Make the settings as described in *Table 5.5* for the input used.

Table 5.5 Analog Input Settings for Frequency Reference Using Voltage Signals

Terminal	Signal Level	Parameter Settings				Notes
		Signal Level Selection	Function Selection	Gain	Bias	
A1	0 to 10 Vdc	H3-01 = 0	H3-02 = 0 (Frequency Reference Bias)	H3-03	H3-04	–
	-10 to +10 Vdc	H3-01 = 1				
A2	0 to 10 Vdc	H3-09 = 0	H3-10 = 0 (Frequency Reference Bias)	H3-11	H3-12	Set DIP switch S1 on the terminal board to “V” for voltage input.
	-10 to +10 Vdc	H3-09 = 1				
A3	0 to 10 Vdc	H3-05 = 0	H3-06 = 0 (Frequency Reference Bias)	H3-07	H3-08	Set DIP switch S4 on the terminal board to “AI”.
	-10 to +10 Vdc	H3-05 = 1				

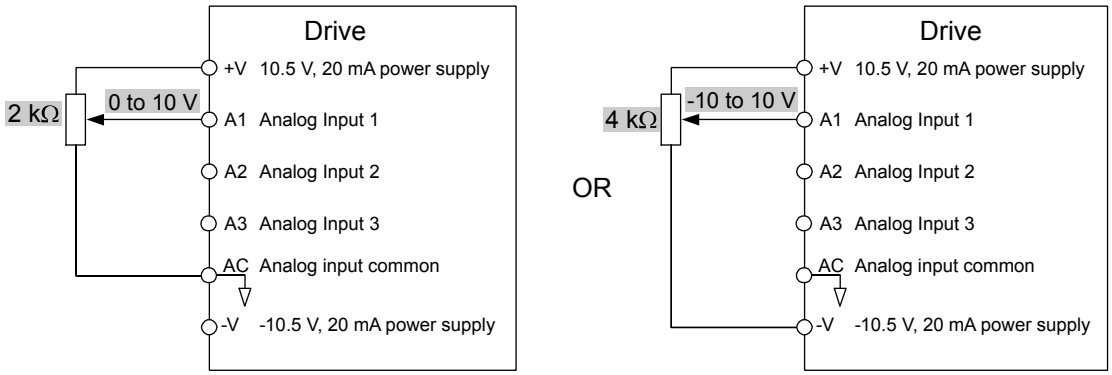

Figure 5.1 Setting the Frequency Reference as a Voltage Signal at Terminal A1

Use the wiring example shown in the figure above for any other analog input terminals. When using input A2 make sure DIP switch S1 is set for voltage input.

Current Input

Input terminal A2 can accept a current input signal. Refer to *Table 5.6* to set terminal A2 for current input.

Table 5.6 Analog Input Settings for Frequency Reference Using a Current Signal

Terminal	Signal Level	Parameter Settings				Notes
		Signal Level Selection	Function Selection	Gain	Bias	
A2	4 to 20 mA	H3-09 = 2	H3-10 = 0 (Frequency Bias)	H3-11	H3-12	Make sure to set DIP switch S1 on the terminal board to "I" for current input.
	0 to 20 mA	H3-09 = 3				

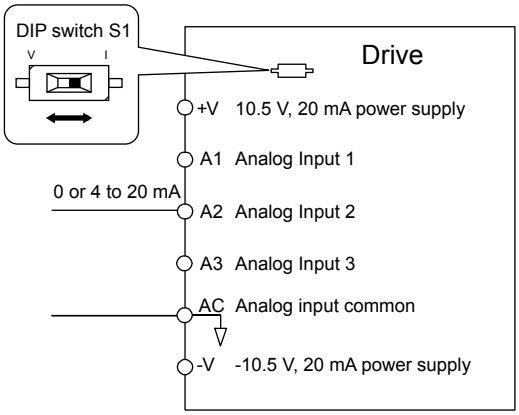

Figure 5.2 Setting the Frequency Reference as a Current Signal to Terminal A2

Switching between Main/Auxiliary Frequency References

The frequency reference input can be switched between the analog terminals A1, A2, and A3 using multi-speed inputs. ***Refer to Multi-Step Speed Selection on page 256*** for details on using this function.

Setting 2: MEMOBUS/Modbus Communications

This setting requires entering the frequency reference via the RS-485/RS-422 serial communications port (control terminals R+, R-, S+, S-). ***Refer to MEMOBUS/Modbus Configuration on page 702*** for instructions.

Setting 3: Option card

This setting requires entering the frequency reference via an option board plugged into connector CN5-A on the drive control board. Consult the option board manual for instructions on integrating the drive with the communication system.

Note: If the frequency reference source is set for Option PCB (b1-01 = 3), but an option board is not installed, an oPE05 operation error will be displayed on the digital operator and the drive will not run.

Setting 4: Pulse Train Input

This setting requires a pulse train signal to terminal RP to provide the frequency reference. Follow the directions below to verify that the pulse signal is working properly.

Verifying the Pulse Train is Working Properly

- Set b1-01 to 4 and set H6-01 to 0.
- Set the H6-02 to the pulse train frequency value that equals 100% of the frequency reference.
- Enter a pulse train signal to terminal RP and check for the correct frequency reference on the display.

■ b1-02: Run Command Selection 1

Determines the Run command source 1 in the REMOTE mode.

No.	Parameter Name	Setting Range	Default
b1-02	Run Command Selection 1	0 to 3	1

Setting 0: Operator

This setting will illuminate the LO/RE light to indicate that the Run command source is assigned to the digital operator. Use the digital operator RUN and STOP keys to start and stop operation.

Setting 1: Control Circuit Terminal

This setting requires entering the Run command via the digital input terminals using one of following sequences:

- 2-Wire sequence 1:

Setting A1-03 to 2220 initializes the drive and presets terminals S1 and S2 to FWD/Stop and REV/Stop. These are the default settings of the drive. ***Refer to Setting 40, 41: Forward Run, Reverse Run Command for 2-Wire Sequence on page 305***.

- 2-Wire sequence 2:

  Two inputs (Start/Stop-FWD/REV). ***Refer to Setting 42, 43: Run and Direction Command for 2-Wire Sequence 2 on page 306***.

- 3-Wire sequence:

  Setting A1-03 to 3330 initializes the drive and presets terminals S1, S2, and S5 to Start, Stop, and FWD/REV. ***Refer to Setting 0: 3-Wire Sequence on page 299***.

Setting 2: MEMOBUS/Modbus Communications

This setting requires entering the Run command via serial communications by connecting the RS-485/RS-422 serial communication cable to control terminals R+, R-, S+, and S- on the removable terminal block. ***Refer to MEMOBUS/Modbus Configuration on page 702*** for instructions.

Setting 3: Option Card

This setting requires entering the Run command via the communication option board by plugging a communication option board into the CN5-A port on the control PCB. Refer to the option board manual for instructions on integrating the drive into the communication system.

Note: If b1-02 is set to 3, but an option board is not installed in CN5-A, an oPE05 operation error will be displayed on the digital operator and the drive will not run.

■ b1-03: Stopping Method Selection

Selects how the drive stops the motor when the Run command is removed or when a Stop command is entered.

No.	Parameter Name	Setting Range	Default
b1-03	Stopping Method Selection	0 to 3 <1>	0

<1> The setting range is 0, 1, or 3 in CLV, OLV/PM, AOLV/PM, and CLV/PM.

Setting 0: Ramp to Stop

When the Run command is removed, the drive will decelerate the motor to stop. The deceleration rate is determined by the active deceleration time. The default deceleration time is set to parameter C1-02.

When the output frequency falls below the level set in parameter b2-01, the drive will start DC injection, Zero Speed Control, or Short Circuit Braking, depending on the selected control mode. ***Refer to b2-01: DC Injection Braking Start Frequency on page 213*** for details.

V/f, V/f w/PG and OLV (A1-02 = 0, 1, 2)

For these control modes, parameter b2-01 sets the starting frequency for DC Injection Braking at Stop. When the output frequency falls below the setting of b2-01, DC Injection Braking is enabled for the time set in parameter b2-04.

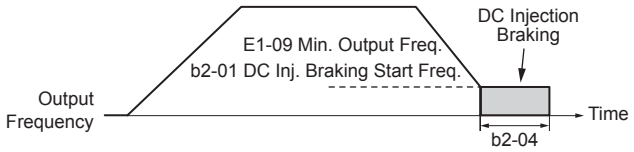

Figure 5.3 DC Injection Braking at Stop for V/f, V/f w/PG, and OLV

Note: If b2-01 is set to a smaller value than E1-09 (Minimum Frequency), then DC Injection Braking will begin when the frequency falls to the E1-09 value.

OLV/PM and AOLV/PM (A1-02 = 5, 6)

For these control modes, parameter b2-01 sets the starting frequency for Short-Circuit Braking at Stop. When the output frequency falls below the setting of b2-01, Short-Circuit Braking is enabled for the time set in parameter b2-13.

If DC Injection Braking Time is enabled at stop, then DC Injection Braking is performed for the time set in b2-04 after Short-Circuit Braking is complete.

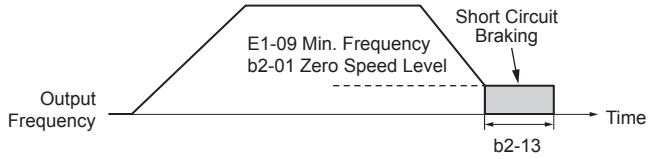

Figure 5.4 Short-Circuit Braking at Stop in OLV/PM and AOLV/PM

Note: If b2-01 is set to a smaller value than E1-09 (Minimum Frequency), then DC Injection Braking will begin when the frequency falls to the E1-09 value.
The drive will not perform short-circuit braking when b2-01 = E1-09 = 0 Hz.

CLV and CLV/PM (A1-02 = 3, 7)

For these control modes, parameter b2-01 sets the starting frequency for Zero Speed Control (not position lock) at Stop. When the output frequency falls below the setting of b2-01, Zero Speed Control is enabled for the time set in parameter b2-04.

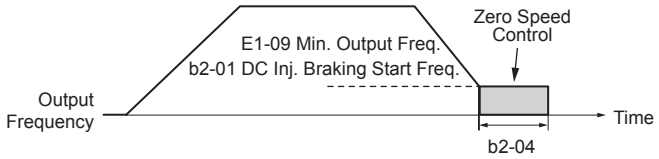

Figure 5.5 Zero Speed Control at Stop in CLV and CLV/PM

Note: If b2-01 is set to lower than E1-09 (Minimum Frequency), then Zero Speed Control begins at the frequency set to E1-09.

Setting 1: Coast to Stop

When the Run command is removed, the drive will shut off its output and the motor will coast (uncontrolled deceleration) to stop. The stopping time is determined by the inertia and the friction in the driven system.

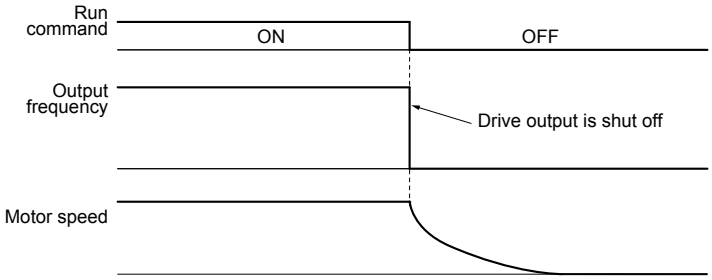

Figure 5.6 Coast to Stop

Note: After a stop is initiated, any subsequent Run command entered will be ignored until the minimum baseblock time (L2-03) has expired. Do not enter Run command until it has come to a complete stop. Use DC Injection at Start (***Refer to b2-03: DC Injection Braking Time at Start on page 214***) or Speed Search (***Refer to b3-01: Speed Search Selection at Start on page 219***) to restart the motor before it has completely stopped.

Setting 2: DC Injection Braking to Stop

When the Run command is removed, the drive will enter baseblock (turn off its output) for the minimum baseblock time (L2-03). When the minimum baseblock time has expired, the drive will inject the amount DC Injection Braking is set in parameter b2-02 into the motor windings to brake the motor. The stopping time in DC Injection Braking to Stop is significantly faster compared to Coast to Stop.

Note: This function is not available in CLV or in control modes for PM motors (A1-02 = 5, 6, 7).

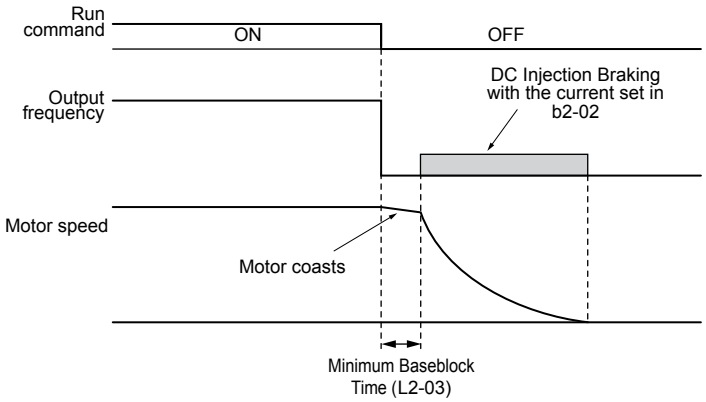

Figure 5.7 DC Injection Braking to Stop

DC Injection Braking time is determined by the value set to b2-04 and the output frequency at the time the Run command is removed. It can be calculated by:

$$\text{DC Injection brake time} = \frac{\text{(b2-04) x 10 x Output frequency}}{\text{Maximum output frequency (E1-04)}}$$

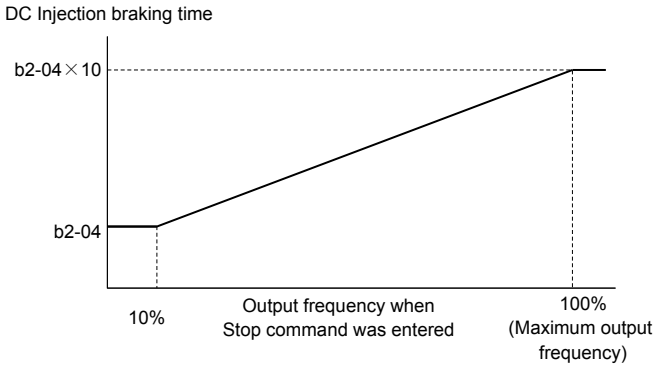

Figure 5.8 DC Injection Braking Time Depending on Output Frequency

Note: If an overcurrent (oC) fault occurs during DC Injection Braking to Stop, lengthen the minimum baseblock time (L2-03) until the fault no longer occurs.

Setting 3: Coast to Stop with Timer

When the Run command is removed, the drive will turn off its output and the motor will coast to stop. The drive will not start if a Run command is input before the time t (C1-02) has expired. Cycle the Run command that was activated during time t after t has expired to start the drive.

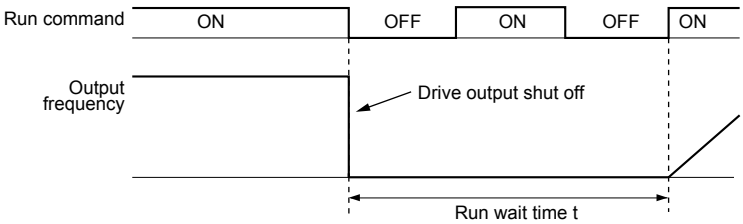

Figure 5.9 Coast to Stop with Timer

The wait time t is determined by the output frequency when the Run command is removed and by the active deceleration time.

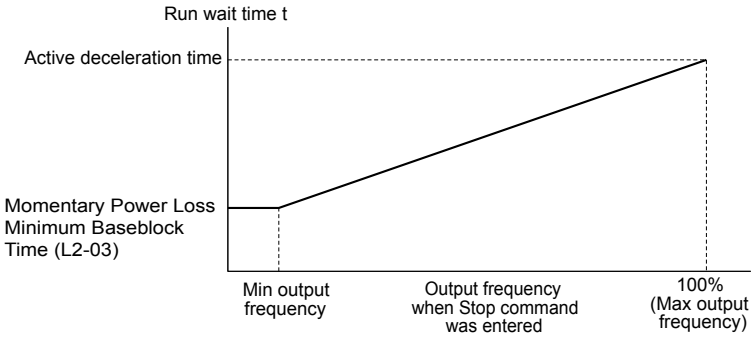

Figure 5.10 Run Wait Time Depending on Output Frequency

■ b1-04: Reverse Operation Selection

Enables and disables Reverse operation. For some applications, reverse motor rotation is not appropriate and may cause problems (e.g., air handling units, pumps, etc.).

No.	Parameter Name	Setting Range	Default
b1-04	Reverse Operation Selection	0, 1	0

Setting 0: Reverse operation enabled

Possible to operate the motor in both forward and reverse directions.

Setting 1: Reverse operation disabled

Drive disregards a Reverse run command or a negative frequency reference.

■ b1-05: Action Selection below Minimum Output Frequency (CLV and CLV/PM)

Sets the operation when the frequency reference is lower than the minimum output frequency set in parameter E1-09.

No.	Parameter Name	Setting Range	Default
b1-05	Action Selection below Minimum Output Frequency	0 to 3	0

Setting 0: Follow the Frequency Reference

The drive adjusts the motor speed following the speed reference, even if the frequency reference is below the setting of parameter E1-09. When the Run command is removed and the motor speed is smaller than the setting of b2-01, Zero Speed Control (not position lock) is performed for the time set in parameter b2-04 before the drive output shuts off.

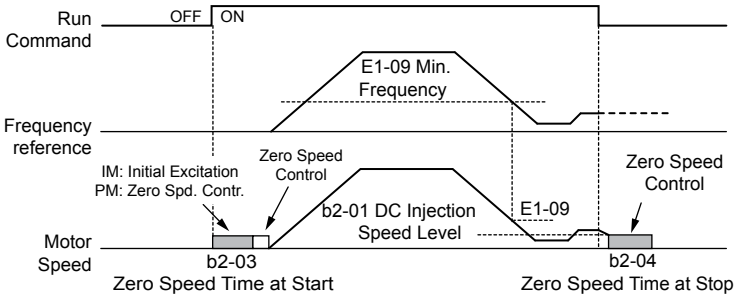

Figure 5.11 Run at the Frequency Reference

Setting 1: Coast to Stop

The motor starts when the frequency reference exceeds the parameter E1-09 setting. When the motor is running and the frequency reference falls below E1-09, the drive output shuts off and the motor coasts. When the motor speed falls below the zero speed level set in b2-01, Zero Speed Control is activated for the time set in b2-04.

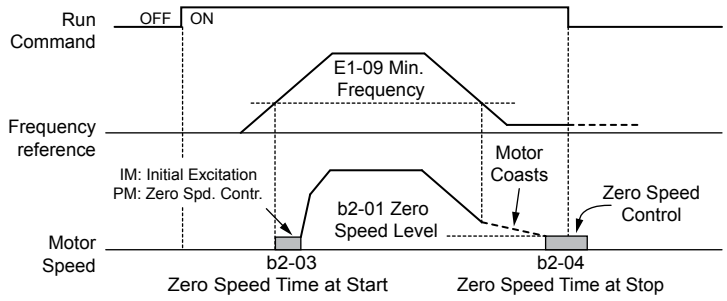

Figure 5.12 Coast to Stop

Setting 2: Run at the Minimum Frequency

When a Run command is active and the frequency reference is smaller than the parameter E1-09 setting, the drive runs the motor at the speed set in E1-09. When the Run command is removed, the drive decelerates the motor. As soon as the motor speed reaches the zero speed level set in b2-01, Zero Speed Control is activated for the time set in b2-04.

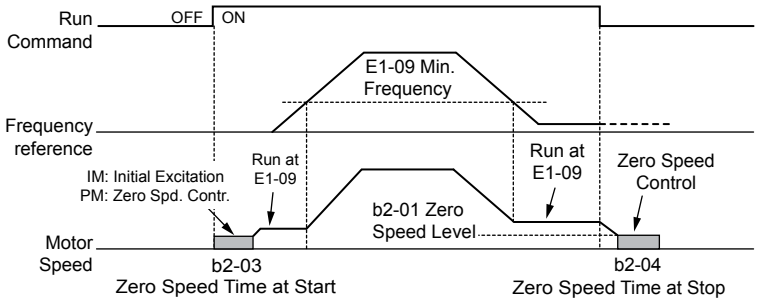

Figure 5.13 Run at the Minimum Frequency

Setting 3: Zero Speed Control

The drive applies Zero Speed Control whenever the frequency reference setting is below the value of parameter E1-09.

Remove the Run command when the drive is operating at or above the frequency set in E1-09 to activate Zero Speed Control for the time set in b2-04, regardless of whether Zero Speed Control was already active.

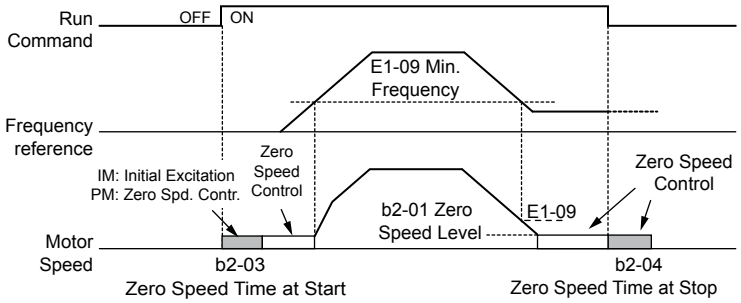

Figure 5.14 Zero Speed Control

■ b1-06: Digital Input Reading

Defines how the digital inputs are read. The inputs are acted upon every 1 ms or 2 ms depending upon the setting.

No.	Name	Setting Range	Default
b1-06	Digital Input Reading	0, 1	1

Setting 0: Read once (1 ms scan)

The state of a digital input is read once. If the state has changed, the input command is immediately processed. With this setting the drive responds more quickly to digital inputs, but a noisy signal could cause erroneous operation.

Setting 1: Read twice (2 ms scan)

The state of a digital input is read twice. The input command is processed only if the state does not change during the double reading. This reading process is slower than the “Read once” process, but it is more resistant to noisy signals.

■ b1-07: LOCAL/REMOTE Run Selection

The drive has three separate control sources that can be switched using digital inputs (H1-□□ = 1 (LOCAL/REMOTE Selection) or 2 (External reference 1/2)) or the LO/RE key on the digital operator. ***Refer to Setting 1: LOCAL/REMOTE Selection on page 299***, ***Refer to Setting 2: External Reference 1/2 Selection on page 300*** and ***Refer to o2-01: LO/RE (LOCAL/REMOTE) Key Function Selection on page 380*** for details.

- LOCAL: Digital operator. The digital operator sets the frequency reference and Run command.
- REMOTE: External reference 1. The frequency reference and Run command source are set by b1-01 and b1-02.
- REMOTE: External reference 2. The frequency reference and Run command source are set by b1-15 and b1-16.

When switching from LOCAL to REMOTE, or between External reference 1 and External reference 2, the Run command may already be present at the location at which the source is being switched. In this case, use parameter b1-07 to determine how the Run command is treated.

No.	Parameter Name	Setting Range	Default
b1-07	LOCAL/REMOTE Run Selection	0, 1	0

Setting 0: Run command must be cycled

When the Run command source differs between the old source and the new source (e.g., the old source was the terminals and the new source is serial communication), and the Run command is active at the new source as the switchover occurs, the drive will not start or the drive will stop operation if it was previously running. The Run command must be cycled at the new source to restart the drive.

Setting 1: Accept Run command at the new source

When the Run command is active at the new source, the drive starts or continues operation if it was previously running.

WARNING! *Sudden Movement Hazard. The drive may start unexpectedly if switching control sources when b1-07 = 1. Clear all personnel from rotating machinery and electrical connections prior to switching control sources. Failure to comply may cause death or serious injury.*

■ b1-08: Run Command Selection while in Programming Mode

As a safety precaution, the drive will not normally respond to a Run command input when the digital operator is being used to adjust parameters in Programming Mode (Verify Menu, Setup Mode, Parameter Settings Mode, and Auto-Tuning Mode). If required by the application, set b1-08 to allow the drive to run while in Programming Mode.

No.	Parameter Name	Setting Range	Default
b1-08	Run Command Selection while in Programming Mode	0 to 2	0

Setting 0: Disabled

A Run command is not accepted while the digital operator is in Programming Mode.

Setting 1: Enabled

A Run command is accepted in any digital operator mode.

Setting 2: Prohibit programming during run

It is not possible to enter the Programming Mode as long as the drive output is active. The Programming Mode cannot be displayed during Run.

■ b1-14: Phase Order Selection

Sets the phase order for drive output terminals U/T1, V/T2, and W/T3.

Switching motor phases will reverse the direction of the motor.

No.	Parameter Name	Setting Range	Default
b1-14	Phase Order Selection	0, 1	0

Setting 0: Standard Phase Order

Setting 1: Switched Phase Order (A1-02 = 0, 1, 2, 3, 5, 6)

■ b1-15: Frequency Reference Selection 2

Enabled when H1-□□ = 2 and the terminal is closed. *Refer to Setting 2: External Reference 1/2 Selection on page 300* and *Refer to b1-02: Run Command Selection 1 on page 206* for details.

No.	Parameter Name	Setting Range	Default
b1-15	Frequency Reference Selection 2	0 to 4	0

■ b1-16: Run Command Selection 2

Enabled when H1-□□ = 2 and the terminal is closed. *Refer to Setting 2: External Reference 1/2 Selection on page 300* and *Refer to b1-01: Frequency Reference Selection 1 on page 205* for details.

No.	Parameter Name	Setting Range	Default
b1-16	Run Command Selection 2	0 to 3	0

■ b1-17: Run Command at Power Up

Determines whether an external Run command that is active during power up will start the drive.

No.	Parameter Name	Setting Range	Default
b1-17	Run Command at Power Up	0, 1	0

Setting 0: Run Command at Power Up Is Not Issued

Cycle the Run command to start the drive.

Note: For safety reasons, the drive is initially programmed not to accept a Run command at power up (b1-17 = 0). If a Run command is issued at power up, the AUTO LED will flash quickly.

Setting 1: Run Command at Power Up Is Issued

If an external Run command is active when the drive is powered up, the drive will begin operating the motor after the internal start up process is complete.

WARNING! *Sudden Movement Hazard. If b1-17 is set to 1 and an external Run command is active during power up, the motor will begin rotating as soon as the power is switched on. Proper precautions must be taken to ensure that the area around the motor is safe prior to powering up the drive. Failure to comply may cause serious injury.*

■ b1-21: Start Condition Selection at Closed Loop Vector Control

Selects a condition to start Closed Loop Vector Control. There is normally no need to change this parameter from the default value.

Note: This parameter is not available in models 4A0930 and 4A1200.

No.	Parameter Name	Setting Range	Default
b1-21	Start Condition Selection at Closed Loop Vector Control	0 or 1	0

Setting 0: Run command is not accepted when b2-01 ≤ motor speed < E1-09

Setting 1: Run command is accepted when b2-01 ≤ motor speed < E1-09

◆ b2: DC Injection Braking and Short Circuit Braking

These parameters determine operation of the DC Injection Braking, Zero Speed Control, and Short Circuit Braking features.

■ b2-01: DC Injection Braking Start Frequency

Active when “Ramp to Stop” is selected as the stopping method (b1-03 = 0).

No.	Name	Setting Range	Default
b2-01	DC Injection Braking Start Frequency	0.0 to 10.0 Hz	Determined by A1-02

The function triggered by parameter b2-01 depends on the control mode that has been selected.

V/f, V/f w/PG and OLV (A1-02 = 0, 1, 2)

For these control modes, parameter b2-01 sets the starting frequency for DC Injection Braking at Stop. When the output frequency falls below the setting of b2-01, DC Injection Braking is enabled for the time set in parameter b2-04.

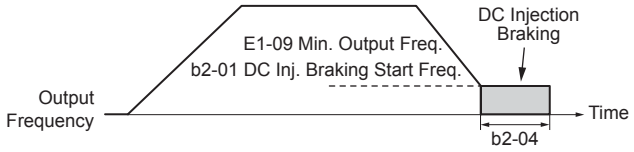

Figure 5.15 DC Injection Braking at Stop for V/f, V/f w/PG, and OLV

Note: If b2-01 is set to a smaller value than E1-09 (Minimum Frequency), then DC Injection Braking will begin when the frequency falls to the E1-09 value.

OLV/PM and AOLV/PM (A1-02 = 5, 6)

For these control modes, parameter b2-01 sets the starting frequency for Short-Circuit Braking at Stop. When the output frequency falls below the setting of b2-01, Short-Circuit Braking is enabled for the time set in parameter b2-13.

If DC Injection Braking Time is enabled at stop, then DC Injection Braking is performed for the time set in b2-04 after Short-Circuit Braking is complete.

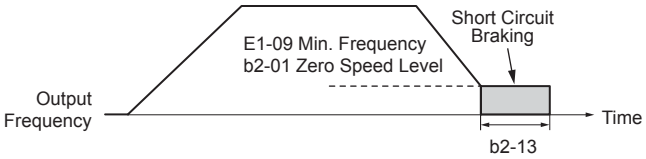

Figure 5.16 Short-Circuit Braking at Stop in OLV/PM and AOLV/PM

Note: If b2-01 is set to a smaller value than E1-09 (Minimum Frequency), then DC Injection Braking will begin when the frequency falls to the E1-09 value. The drive will not perform short-circuit braking when b2-01 = E1-09 = 0 Hz.

CLV and CLV/PM (A1-02 = 3, 7)

For these control modes, parameter b2-01 sets the starting frequency for Zero Speed Control (not position lock) at Stop. When the output frequency falls below the setting of b2-01, Zero Speed Control is enabled for the time set in parameter b2-04.

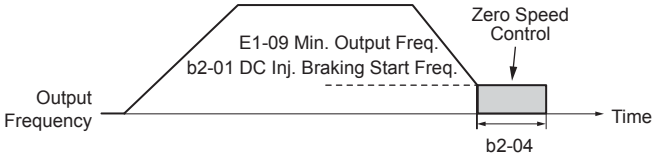

Figure 5.17 Zero Speed Control at Stop in CLV and CLV/PM

Note: If b2-01 is set to lower than E1-09 (Minimum Frequency), then Zero Speed Control begins at the frequency set to E1-09.

■ b2-02: DC Injection Braking Current

Sets the DC Injection Braking current as a percentage of the drive rated current. The carrier frequency is automatically reduced to 1 kHz when this parameter is set to more than 50%.

Note: This parameter is not available in AOLV/PM in models 4A0930 and 4A1200.

No.	Name	Setting Range	Default
b2-02	DC Injection Braking Current	0 to 100%	50%

The level of DC Injection Braking current affects the strength of the magnetic field attempting to lock the motor shaft. Increasing the current level will increase the amount of heat generated by the motor windings. Do not set this parameter higher than the level necessary to hold the motor shaft.

■ b2-03: DC Injection Braking Time at Start

Sets the time of DC Injection Braking (Zero Speed Control in CLV and CLV/PM) at start. Used to stop a coasting motor before restarting it or to apply braking torque at start. Disabled when set to 0.00 s.

Note: This parameter is not available in AOLV/PM in models 4A0930 and 4A1200.

No.	Name	Setting Range	Default
b2-03	DC Injection Braking Time at Start	0.00 to 10.00 s	0.00 s

Note: Before starting an uncontrolled rotating motor (e.g., a fan motor driven by windmill effect), use DC Injection or Speed Search to stop the motor or detect motor speed before starting it. Otherwise, motor stalling and other faults can occur.

■ b2-04: DC Injection Braking Time at Stop

Sets the time of DC Injection Braking (Zero Speed Control in CLV and CLV/PM) at stop. Used to completely stop a motor with high inertia load after ramp down. Increase the value if the motor still coasts by inertia after it should have stopped. Disabled when set to 0.00 s.

Note: This parameter is not available in AOLV/PM in models 4A0930 and 4A1200.

No.	Name	Setting Range	Default
b2-04	DC Injection Braking Time at Stop	0.00 to 10.00 s	Determined by A1-02

■ b2-08: Magnetic Flux Compensation Value

Sets the magnetic flux compensation at start as a percentage of the no-load current value (E2-03). This function allows for the development of more flux to facilitate starting machines that require high starting torque or motors with a large rotor time constant.

No.	Name	Setting Range	Default
b2-08	Magnetic Flux Compensation Value	0 to 1000%	0%

When a Run command is issued, the DC current level injected into the motor changes linearly from the level set to b2-08 to the level set to E2-03 within the time set to b2-03.

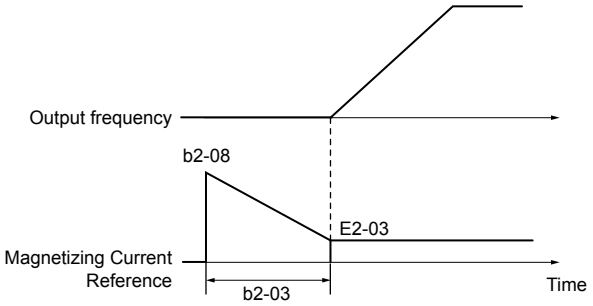

Figure 5.18 Magnetic Flux Compensation

When b2-08 ≠ 0%, the current will flow for the time set in b2-03 (DC Injection Braking Time at Start) when DC Injection Braking starts. The current will change linearly from the setting of b2-08 to the setting of E2-03.

The level of the DC current injected to the motor is limited to 80% of the drive rated current or to the motor rated current, whichever value is smaller.

Note:
1. If b2-08 is set below 100%, it can take a relatively long time for flux to develop.
2. If b2-08 is set to 0%, the DC current level will be the DC Injection current set to b2-02.
3. As DC Injection can generate a fair amount of noise, b2-08 may need to be adjusted to keep noise levels acceptable.

■ b2-12: Short Circuit Brake Time at Start

Short Circuit Braking can be used in OLV/PM and AOLV/PM. Shorting all three motor phases produces a braking torque in the motor and can stop a coasting motor before starting it again. Disabled when set to 0.00 s.

No.	Name	Setting Range	Default
b2-12	Short Circuit Brake Time at Start	0.00 to 25.50 s	0.00 s

Note: Short Circuit Braking cannot prevent a PM motor from being rotated by an external force. Use DC Injection to prevent the load from rotating the motor.

■ b2-13: Short Circuit Brake Time at Stop

The Short Circuit Braking described for parameter b2-12 can also be applied at the end of deceleration to completely stop high inertia loads. Short Circuit Braking is initiated for the time set in b2-13 when the output frequency falls below the higher of the values b1-02 and E1-09. Disabled when set to 0.00 s.

No.	Name	Setting Range	Default
b2-13	Short Circuit Brake Time at Stop	0.00 to 25.50 s	0.50 s

■ b2-18: Short Circuit Braking Current

Sets the current level for Short Circuit Braking operation as a percentage of the motor rated current. The Short Circuit Braking current cannot be higher than the drive rated current (120% for Normal Duty, 150% for Heavy Duty), although a higher current level can be set using b2-18.

No.	Name	Setting Range	Default
b2-18	Short Circuit Braking Current	0.0 to 200.0%	100.0%

◆ b3: Speed Search

The Speed Search function allows the drive to detect the speed of a rotating motor shaft that is driven by external forces and start the motor operation directly from the detected speed without first stopping the machine.

Example: When a momentary loss of power occurs, the drive output shuts off and the motor coasts. When power returns, the drive can find the speed of the coasting motor and restart it directly.

Enabling Speed Search for PM motors only requires setting parameter b3-01 to 1.

The drive offers current detection and speed estimation Speed Search for induction motors. Parameter b3-24 selects the speed search method for induction motors. Both methods and relevant parameters are explained below.

■ Current Detection Speed Search (b3-24 = 0)

Current Detection Speed Search detects the motor speed by looking at motor current in IM motors. When Speed Search is started it reduces the output frequency starting from either the maximum output frequency or the frequency reference while increasing the output voltage using the time set in parameter L2-04. As long as the current is higher than the level set to b3-02, the output frequency is lowered using the time constant set to b3-03. If the output current falls below b3-02, the drive assumes that the output frequency and motor speed are the same and accelerates or decelerates to the frequency reference.

Be aware that sudden acceleration may occur when using this method of Speed Search with relatively light loads.

Figure 5.19 illustrates Current Detection Speed Search operation after a momentary power loss (L2-01 must be set to 1 or 2):

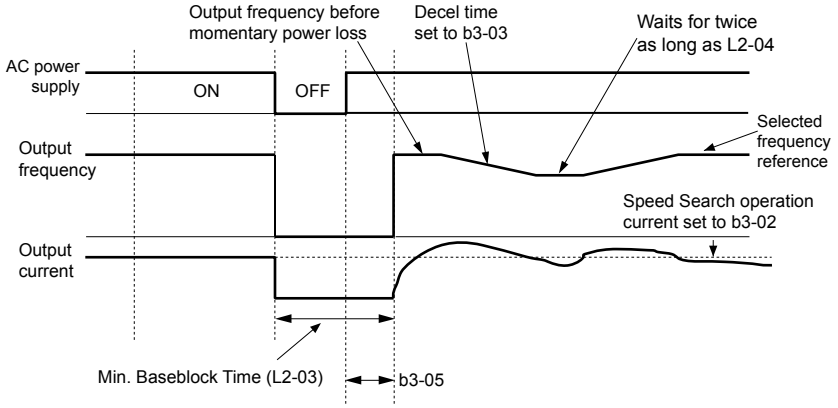

Figure 5.19 Current Detection Speed Search after Power Loss

Note: After power is restored, the drive waits until the time set to b3-05 has passed before performing Speed Search. Thereby the Speed Search may start not at the end of L2-03 but even later.

When Speed Search is applied automatically with the Run command, the drive waits for the minimum baseblock time set to L2-03 before starting Speed Search. If L2-03 is lower than the time set to parameter b3-05, then b3-05 is used as the wait time.

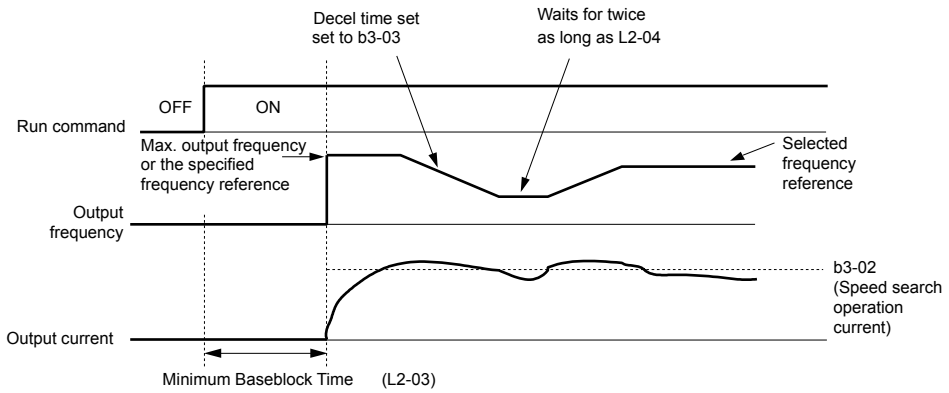

Figure 5.20 Current Detection Speed Search at Start or Speed Search Command by Digital Input

Notes on Using Current Detection Type Speed Search

- Shorten the Speed Search deceleration time set to b3-03 if an oL1 fault occurs while performing Current Detection Speed Search.
- Current Detection Speed Search is not available when using OLV Control for PM motors.
- Increase the minimum baseblock time set to L2-03 if an overcurrent or overvoltage fault occurs when performing Speed Search after power is restored following a momentary power loss.

■ Speed Estimation Type Speed Search (b3-24 = 1)

This method can be used for a single induction motor connected to a drive. Do not use this method if the motor is one or more frame size smaller than the drive, at motor speeds above 200 Hz, or when using a single drive to operate more than one motor.

Speed Estimation is executed in the two steps described below:

Step 1: Back EMF Voltage Estimation

This method is used by Speed Search after baseblock (e.g., a power loss where the drive CPU continued to run and the Run command was kept active). Here, the drive estimates the motor speed by analyzing the back EMF voltage and outputs the estimated frequency and increases the voltage using the time constant set in parameter L2-04. After that, the motor is accelerated or decelerated to the frequency reference starting from the detected speed. If there is not enough residual voltage in the motor windings to perform the calculations described above, the drive will automatically proceed to step 2.

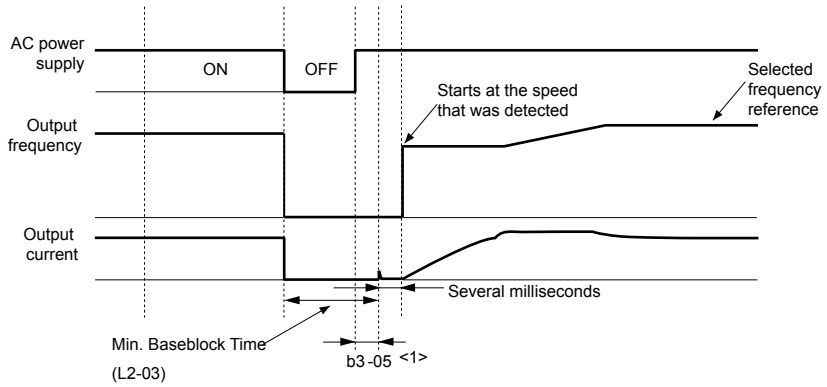

Figure 5.21 Speed Search after Baseblock

<1> After AC power is restored, the drive will wait for at least the time set to b3-05. If the power interruption is longer than the minimum baseblock time set to L2-03, the drive will wait until the time set to b3-05 has passed after power is restored before starting Speed Search.

Step 2: Current Injection

Current Injection is performed when there is insufficient residual voltage in the motor after extended power losses, when Speed Search is applied with the Run command (b3-01 = 1), or when an External search command is used.

This feature injects the amount of DC current set to b3-06 to the motor and detects the speed by measuring the current feedback. The drive then outputs the detected frequency and increases the voltage using the time constant set to parameter L2-04 while looking at the motor current.

The output frequency is reduced if the current is higher than the level in b3-02. When the current falls below b3-02, the motor speed is assumed to be found and the drive starts to accelerate or decelerate to the frequency reference.

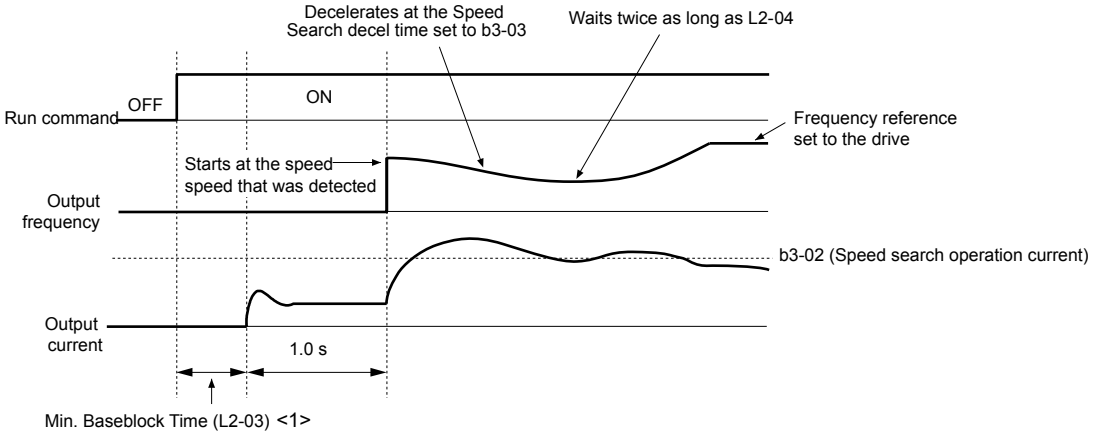

Figure 5.22 Speed Search at Start

<1> The wait time for Speed Search (b3-05) determines the lower limit.

Notes on Using Speed Estimation Speed Search

- Perform Rotational Auto-Tuning for V/f Control (T1-01 = 3) prior to using Speed Estimation in V/f Control and perform Stationary Auto-Tuning for Line-to-Line Resistance (T1-01 = 2) again if the there is a change in the cable length between the drive and motor.
- Use Current Detection to search for speeds beyond 200 Hz if the application is running multiple motors from the same drive or if the motor is considerably smaller than the capacity of the drive.
- Speed Estimation may have trouble finding the actual speed if the motor cable is very long. Use Current Detection in these instances.
- Use Current Detection instead of Speed Estimation when operating motors smaller than 1.5 kW because Speed Estimation might not be able to detect the speed or rotation of these smaller motors, in which case Speed Estimation would stop the motor.
- Use Short Circuit Braking instead of Speed Search when using OLV/PM and AOLV/PM with a long motor cable.
- Use Short Circuit Braking instead of Speed Search when attempting to find the speed of a motor coasting faster than 200 Hz in OLV/PM and AOLV/PM.

■ Speed Search Activation

Speed Search can be activated using any of the methods 1 through 5 described below. Select the Speed Search type in parameter b3-24 independent of the activation method.

Method 1. Automatically activate Speed Search with every Run command. Set b3-01, Speed Search Selection at Start, to 1 (Enabled). External Speed Search commands are ignored.

Method 2. Activate Speed Search using the multi-function input terminal.

Use the input functions for H1-□□ in *Table 5.7*.

Table 5.7 Speed Search Activation by Multi-Function Input Terminal

Setting	Description	b3-24 = 1 (Current Injection Method of Speed Estimation)	b3-24 = 0 (Current Detection Speed Search)
61	External Search Command 1	Activate Speed Estimation Speed Search	Closed: Activate Current Detection Speed Search from the maximum output frequency (E1-04).
62	External Search Command 2	Activate Speed Estimation Speed Search	Closed: Activate Current Detection Speed Search from the frequency reference.

To activate Speed Search by the multi-function input terminal, the input must be set together with the Run command or the Run command must be entered after giving the Speed Search command.

Method 3. After automatic fault restart.

When the number of maximum fault restarts in parameter L5-01 is set higher than 0, the drive will automatically perform Speed Search as specified by b3-24 following a fault.

Method 4. After momentary power loss.

This mode requires that the Power Loss Ride-Thru function is enabled during CPU operation (L2-01 = 1 or 2). ***Refer to L2-01: Momentary Power Loss Operation Selection on page 338*** for details.

Method 5. After external baseblock is released.

The drive will resume the operation starting with Speed Search if the Run command is present and the output frequency is above the minimum frequency when the Baseblock command (H1-□□ = 8 or 9) is released.

■ b3-01: Speed Search Selection at Start

Determines if Speed Search is automatically performed when a Run command is issued.

No.	Parameter Name	Setting Range	Default
b3-01	Speed Search Selection at Start	0, 1	Determined by A1-02

Setting 0: Disabled

This setting starts operating the drive at the minimum output frequency when the Run command is entered. If external Speed Search 1 or 2 is already enabled by a digital input, the drive will start operating with Speed Search.

Setting 1: Enabled

This setting performs Speed Search when the Run command is entered. The drive begins running the motor after Speed Search is complete.

■ b3-02: Speed Search Deactivation Current

Sets the operating current for Speed Search as a percentage of the drive rated current. Normally there is no need to change this setting. Lower this value if the drive has trouble restarting.

No.	Name	Setting Range	Default
b3-02	Speed Search Deactivation Current	0 to 200%	Determined by A1-02

Note: When parameter A1-02 = 0 (V/f Control) the factory default setting is 120. When parameter A1-02 = 2 (Open Loop Vector) the factory default setting is 100.

■ b3-03: Speed Search Deceleration Time

Sets the output frequency reduction ramp used by the Current Injection Method of Speed Estimation (b3-24 = 1). The time entered into b3-03 will be the time to decelerate from maximum frequency (E1-04) to minimum frequency (E1-09).

No.	Name	Setting Range	Default
b3-03	Speed Search Deceleration Time	0.1 to 10.0 s	2.0 s

■ b3-04: V/f Gain during Speed Search

During Speed Search, the output voltage calculated from the V/f pattern is multiplied with this value. Changing this value can help reduce the output current during Speed Search.

No.	Name	Setting Range	Default
b3-04	V/f Gain during Speed Search	10 to 100%	Determined by C6-01 and o2-04

Note: Available control modes for parameter b3-04 vary by drive model:
Models 2A0004 to 2A0415 and 4A0002 to 4A0675: Available when A1-02 = 0.
Models 4A0930 and 4A1200: Available when A1-02 = 0, 2.

■ b3-05: Speed Search Delay Time

In cases where an output contactor is used between the drive and the motor, the contactor must be closed before Speed Search can be performed. This parameter can be used to delay the Speed Search operation, giving the contactor enough time to close completely.

No.	Name	Setting Range	Default
b3-05	Speed Search Delay Time	0.0 to 100.0 s	0.2 s

■ b3-06: Output Current 1 During Speed Search

Sets the current injected to the motor at the beginning of Speed Estimation Speed Search as a factor of the motor rated current set in E2-01 (E4-01 for motor 2). If the motor speed is relatively slow when the drive starts to perform Speed Search after a long period of baseblock, it may be helpful to increase the setting value. The output current during Speed Search is automatically limited by the drive rated current.

No.	Name	Setting Range	Default
b3-06	Output Current 1 during Speed Search	0.0 to 2.0	Determined by o2-04

Note: Use Current Detection Speed Search if Speed Estimation is not working correctly even after adjusting b3-06.

■ b3-07: Output Current 2 during Speed Search (Speed Estimation Type)

Sets the amount of output current during Speed Estimation Speed Search as a coefficient for the no-load current. Output current during Speed Search is automatically limited by the drive rated current. Increase this setting value in increments of 0.1 if the drive fails to perform Speed Estimation

Note: This parameter is only available in models 4A0930 and 4A1200.

No.	Name	Setting Range	Default
b3-07	Output Current 2 during Speed Search (Speed Estimation Type)	0.0 to 5.0	Determined by C6-01 and o2-04

■ b3-08: Current Control Gain during Speed Search (Speed Estimation Type)

Sets the proportional gain for the current controller to adjust the responsiveness during Speed Estimation Speed Search. There is normally no need to change this parameter from the default value.

No.	Name	Setting Range	Default
b3-08	Current Control Gain during Speed Search (Speed Estimation Type)	0.00 to 6.00	A1-02 = 0 to 3: Determined by o2-04 A1-02 = 5, 6: 0.30

■ b3-09: Current Control Integral Time during Speed Search (Speed Estimation Type)

Sets the integral time for the current controller to adjust the responsiveness during a Speed Estimation Speed Search. There is normally no need to change this parameter from the default value.

No.	Name	Setting Range	Default
b3-09	Current Control Integral Time during Speed Search (Speed Estimation Type)	0.0 to 1000.0 ms	A1-02 = 0 to 3: 2.0 ms A1-02 = 5, 6: 4.0 ms

■ b3-10: Speed Search Detection Compensation Gain (Speed Estimation Type)

Sets the gain for the detected motor speed of the Speed Estimation Speed Search. Increase the setting only if an overvoltage fault occurs when the drive restarts the motor.

No.	Name	Setting Range	Default
b3-10	Speed Search Detection Compensation Gain	1.00 to 1.20	1.05

■ b3-12: Minimum Current Detection Level during Speed Search

Sets the minimum current detection level during Speed Search. Increase this setting value in increments of 0.1 if the drive fails to perform Speed Estimation.

Note: This parameter is only available in models 4A0930 and 4A1200.

No.	Name	Setting Range	Default
b3-12	Minimum Current Detection Level during Speed Search	2.0 to 10.0	6.0

■ b3-14: Bi-Directional Speed Search Selection

Sets how the drive determines the motor rotation direction when performing Speed Estimation Speed Search.

No.	Parameter Name	Setting Range	Default
b3-14	Bi-Directional Speed Search Selection	0, 1	Determined by A1-02

Setting 0: Disabled

The drive uses the frequency reference to determine the direction of motor rotation to restart the motor.

Setting 1: Enabled

The drive detects the motor rotation direction to restart the motor.

■ b3-17: Speed Search Restart Current Level (Speed Estimation Type)

Sets the current level at which Speed Estimation is restarted as a percentage of drive rated current to avoid overcurrent and overvoltage problems since a large current can flow into the drive if the difference between the estimated frequency and the actual motor speed is too big when performing Speed Estimation.

No.	Name	Setting Range	Default
b3-17	Speed Search Restart Current Level	0 to 200%	150%

■ b3-18: Speed Search Restart Detection Time (Speed Estimation Type)

Sets the time for which the current must be above the level set in b3-17 before restarting Speed Search.

No.	Name	Setting Range	Default
b3-18	Speed Search Restart Detection Time	0.00 to 1.00 s	0.10 s

■ b3-19: Number of Speed Search Restarts (Speed Estimation Type)

Sets the number of times the drive should attempt to find the speed and restart the motor. If the number of restart attempts exceeds the value set to b3-19, the SEr fault will occur and the drive will stop.

No.	Name	Setting Range	Default
b3-19	Number of Speed Search Restarts	0 to 10	3

■ b3-24: Speed Search Method Selection

Sets the Speed Search method.

No.	Parameter Name	Setting Range	Default
b3-24	Speed Search Method Selection	0, 1	0

Setting 0: Current Detection

Setting 1: Speed Estimation

Note: *Refer to Current Detection Speed Search (b3-24 = 0) on page 216* and *Refer to Speed Estimation Type Speed Search (b3-24 = 1) on page 217* for explanations of the Speed Search methods.

■ b3-25: Speed Search Wait Time

Sets the wait time between Speed Search restarts. Increase the wait time if problems occur with overcurrent, overvoltage, or if the SEr fault occurs.

No.	Name	Setting Range	Default
b3-25	Speed Search Wait Time	0.0 to 30.0 s	0.5 s

■ b3-26: Direction Determining Level

Sets the level that determines the direction of motor rotation. Increase this value if the drive fails to detect the direction of the motor correctly.

Note: This parameter is only available in models 4A0930 and 4A1200.

No.	Name	Setting Range	Default
b3-26	Direction Determining Level	40 to 60000	Determined by C6-01 and o2-04

■ b3-27: Start Speed Search Select

Selects a condition to activate Speed Search Selection at Start (b3-01) or External Speed Search Command 1 or 2 from the multi-function input.

No.	Name	Setting Range	Default
b3-27	Start Speed Search Select	0, 1	0

Setting 0: Triggered when a Run Command Is Issued (Normal)

Setting 1: Triggered when an External Baseblock Is Released

■ b3-29: Speed Search Induced Voltage Level

Lower this value in small increments if changes are necessary. Setting this value too low will prevent the drive from performing Speed Search. There is normally no need to change this parameter from the default value.

Note: This parameter is not available in models 4A0930 and 4A1200.

No.	Name	Setting Range	Default
b3-29	Speed Search Induced Voltage Level	0 to 10%	10%

■ b3-33: Speed Search Selection when Run Command is Given during Uv

Activates and deactivates Speed Search at start in accordance with whether a Run command was issued during an undervoltage (Uv) condition. Function is active when a momentary power loss (L2-01 = 1 or 2), Speed Search at start (b3-01 = 1), and coasting to a stop (b1-03 = 1) are enabled.

Note: This parameter is not available in models 4A0930 and 4A1200.

No.	Name	Setting Range	Default
b3-33	Speed Search Selection when Run Command is Given during Uv	0, 1	0

Setting 0: Disabled

Setting 1: Enabled

◆ b4: Timer Function

The timer function is independent of drive operation and can delay the switching of a digital output triggered by a digital input signal and help eliminate chattering switch noise from sensors. An on-delay and off-delay can be set separately.

To enable the timer function, set a multi-function input to “Timer Function Input” (H1-□□ = 18) and set a multi-function output to “Timer output” (H2-□□ = 12). Only one timer can be used.

■ b4-01, b4-02: Timer Function On-Delay, Off-Delay Time

b4-01 sets the on-delay time for switching the timer output. b4-02 sets the off-delay time for switching the timer output.

No.	Name	Setting Range	Default
b4-01	Timer Function On-Delay Time	0.0 to 3000.0 s	0.0 s
b4-02	Timer Function Off-Delay Time	0.0 to 3000.0 s	0.0 s

■ Timer Function Operation

The timer function switches on when the timer function input closes for longer than the value set to b4-01. The timer function switches off when the timer function input is open for longer than the value set to b4-02. *Figure 5.23* illustrates the timer function operation:

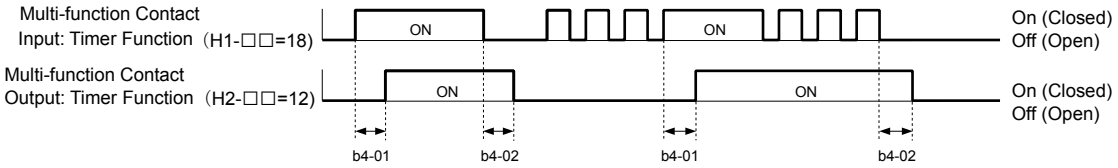

Figure 5.23 Timer Operation

■ b4-03 to b4-08: H2-□□ ON-Delay and OFF-Delay Time

Sets the length of the delay time for contact outputs to open or close for the related functions set in H2-□□.

Note: These parameters are not available in models 4A0930 and 4A1200.

No.	Name	Setting Range	Default
b4-03	H2-01 ON Delay Time	0 to 65000 ms	0 ms
b4-04	H2-01 OFF Delay Time	0 to 65000 ms	0 ms
b4-05	H2-02 ON Delay Time	0 to 65000 ms	0 ms
b4-06	H2-02 OFF Delay Time	0 to 65000 ms	0 ms
b4-07	H2-03 ON Delay Time	0 to 65000 ms	0 ms
b4-08	H2-03 OFF Delay Time	0 to 65000 ms	0 ms

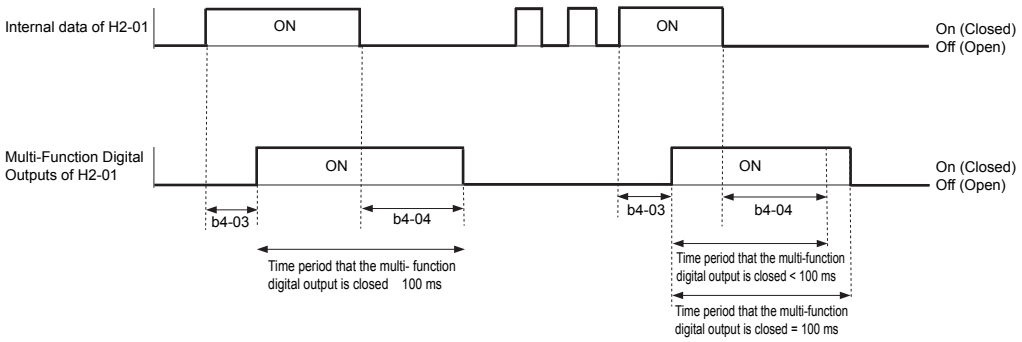

Note: The multi-function digital output closes for at least 100 ms even when the length of the off-delay time and on-delay time for multi-function digital output are each shorter than 100 ms,

◆ b5: PID Control

The drive has a built-in Proportional + Integral + Derivative (PID) controller that uses the difference between the target value and the feedback value to adjust the drive output frequency to minimize deviation and provide accurate closed loop control of system variables such as pressure or temperature.

■ P Control

The output of P control is the product of the deviation and the P gain so that it follows the deviation directly and linearly. With P control, only an offset between the target and feedback remains.

■ I Control

The output of I control is the integral of the deviation. It minimizes the offset between target and feedback value that typically remains when pure P control is used. The integral time (I time) constant determines how fast the offset is eliminated.

■ D Control

D control predicts the deviation signal by multiplying its derivative (slope of the deviation) with a time constant, then adds this value to the PID input. This way the D portion of a PID controller provides a braking action to the controller response and can reduce the tendency to oscillate and overshoot.

D control tends to amplify noise on the deviation signal, which can result in control instability. Only use D control when absolutely necessary.

PID Operation

To better demonstrate PID functionality, *Figure 5.24* illustrates the PID output when the PID input (deviation) is at a constant level.

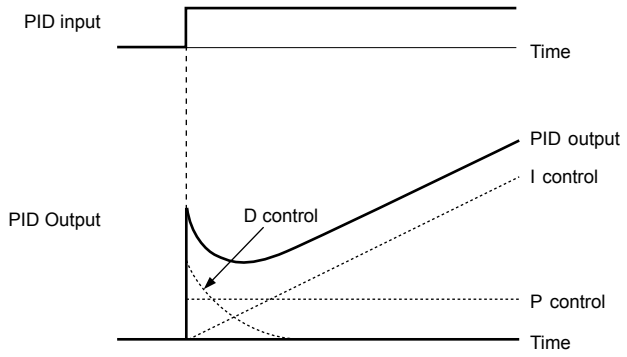

Figure 5.24 PID Operation

Using PID Control

Applications for PID control are listed in *Table 5.8*.

Table 5.8 Using PID Control

Application	Description	Sensors Used
Speed Control	Machinery speed is fed back and adjusted to meet the target value. Synchronous control is performed using speed data from other machinery as the target value	Tachometer
Pressure	Maintains constant pressure using pressure feedback.	Pressure sensor
Fluid Control	Keeps flow at a constant level by feeding back flow data.	Flow rate sensor
Temperature Control	Maintains a constant temperature by controlling a fan with a thermostat.	Thermocoupler, Thermistor

PID Setpoint Input Methods

The PID setpoint input can be input from one of the sources listed in *Table 5.9*.

If none of the sources listed in *Table 5.9* are used, the frequency reference source in b1-01 (or b1-15) or one of the inputs listed in *Table 5.9* becomes the PID setpoint.

Table 5.9 PID Setpoint Sources

PID Setpoint Source	Settings
Analog Input A1	Set H3-02 = C
Analog Input A2	Set H3-10 = C
Analog Input A3	Set H3-06 = C
MEMOBUS/Modbus Register 0006 H	Set bit 1 in register 000F H to 1 and input the setpoint to register 0006 H
Pulse Input RP	Set H6-01 = 2
Parameter b5-19	Set parameter b5-18 = 1 and input the PID setpoint to b5-19

Note: A duplicate allocation of the PID setpoint input will cause an oPE07 (Multi-Function Analog Input Selection Error) alarm.

PID Feedback Input Methods

Input one feedback signal for normal PID control or input two feedback signals can for controlling a differential process value.

Normal PID Feedback

Input the PID feedback signal from one of the sources listed in *Table 5.10*:

Table 5.10 PID Feedback Sources

PID Feedback Source	Settings
Analog Input A1	Set H3-02 = B
Analog Input A2	Set H3-10 = B
Analog Input A3	Set H3-06 = B
Pulse Input RP	Set H6-01 = 1

Note: A duplicate allocation of the PID feedback input will cause an oPE07 (Multi-Function Analog Input Selection Error) alarm.

Differential Feedback

The second PID feedback signal for differential feedback can come from the sources listed in *Table 5.11*. The differential feedback function is automatically enabled when a differential feedback input is assigned.

Table 5.11 PID Differential Feedback Sources

PID Differential Feedback Source	Settings
Analog Input A1	Set H3-02 = 16 (Differential PID Feedback)
Analog Input A2	Set H3-10 = 16 (Differential PID Feedback)
Analog Input A3	Set H3-06 = 16 (Differential PID Feedback)

Note: A duplicate allocation of the PID differential feedback input will cause an oPE07 (Multi-Function Analog Input Selection Error) alarm.

■ PID Block Diagram

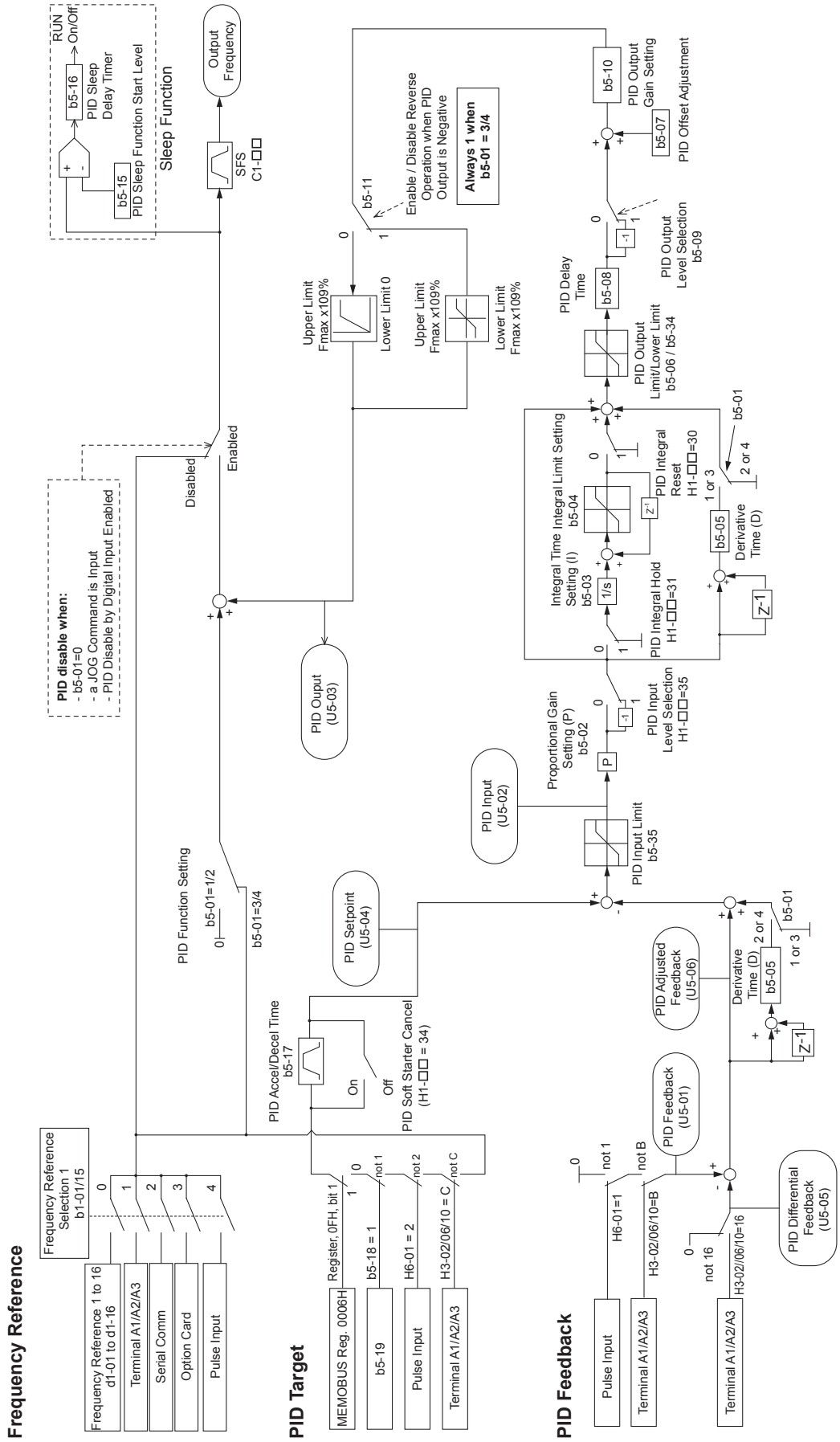

Figure 5.25 PID Block Diagram

■ b5-01: PID Function Setting

Enables or disables the PID operation and selects the PID operation mode.

No.	Parameter Name	Setting Range	Default
b5-01	PID Function Setting	0 to 8	0

Setting 0: PID disabled

Setting 1: Output frequency = PID output 1

The PID controller is enabled and the PID output builds the frequency reference. The PID input is D controlled.

Setting 2: Output frequency = PID output 2

The PID controller is enabled and the PID output builds the frequency reference. The PID feedback is D controlled.

Setting 3: Output frequency = frequency reference + PID output 1

The PID controller is enabled and the PID output is added to the frequency reference. The PID input is D controlled.

Setting 4: Output frequency = frequency reference + PID output 2

The PID controller is enabled and the PID output is added to the frequency reference. The PID feedback is D controlled.

Setting 5: Mode compatible with setting 1 of similar products from a previous product line

Setting 6: Mode compatible with setting 2 of similar products from a previous product line

Setting 7: Mode compatible with setting 3 of similar products from a previous product line

Setting 8: Mode compatible with setting 4 of similar products from a previous product line

Note:
1. If the drive is replaced with Varispeed F7 drive or a similar product from a previous product line, use settings 5 to 8 instead of settings 1 to 4.
2. Settings 5 to 8 are not available for models 4A0930 and 4A1200.

■ b5-02: Proportional Gain Setting (P)

Sets the P gain applied to the PID input. Larger values will tend to reduce the error but may cause oscillations if set too high, while lower values may allow too much offset between the setpoint and feedback.

No.	Name	Setting Range	Default
b5-02	Proportional Gain Setting (P)	0.00 to 25.00	2.00

■ b5-03: Integral Time Setting (I)

Sets the time constant used to calculate the integral of the PID input. The shorter the integral time set to b5-03, the faster the offset will be eliminated. If the integral time is set too short, however, overshoot or oscillation may occur. To turn off the integral time, set b5-03 to 0.00.

No.	Name	Setting Range	Default
b5-03	Integral Time Setting (I)	0.0 to 360.0 s	1.0 s

■ b5-04: Integral Limit Setting

Sets the maximum output possible from the integral block as a percentage of the maximum frequency (E1-04).

No.	Name	Setting Range	Default
b5-04	Integral Limit Setting	0.0 to 100.0%	100.0%

Note: On some applications, especially those with rapidly varying loads, the output of the PID function may show a fair amount of oscillation. Program b5-04 to apply a limit to the integral output and suppress this oscillation.

■ b5-05: Derivative Time (D)

Sets the time the drive predicts the PID input/PID feedback signal based on the derivative of the PID input/PID feedback. Longer time settings improve the response but can cause instability, while shorter time settings reduce the overshoot but reduce controller responsiveness. D control is disabled by setting b5-05 to zero seconds.

No.	Name	Setting Range	Default
b5-05	Derivative Time (D)	0.00 to 10.00 s	0.00 s

■ b5-06: PID Output Limit

Sets the maximum output possible from the entire PID controller as a percentage of the maximum frequency (E1-04).

No.	Name	Setting Range	Default
b5-06	PID Output Limit	0.0 to 100.0%	100.0%

■ b5-07: PID Offset Adjustment

Sets the offset added to the PID controller output as a percentage of the maximum frequency (E1-04).

No.	Name	Setting Range	Default
b5-07	PID Offset Adjustment	-100.0 to 100.0%	0.0%

■ b5-08: PID Primary Delay Time Constant

Sets the time constant for the filter applied to the output of the PID controller. Normally, change is not required.

No.	Name	Setting Range	Default
b5-08	PID Primary Delay Time Constant	0.00 to 10.00 s	0.00 s

Note: Useful when there is a fair amount of oscillation or when rigidity is low. Set to a value larger than the cycle of the resonant frequency. Increasing this time constant may reduce the responsiveness of the drive.

■ b5-09: PID Output Level Selection

Reverses the sign of the PID controller output signal. Normally a positive PID input (feedback smaller than setpoint) leads to positive PID output.

No.	Parameter Name	Setting Range	Default
b5-09	PID Output Level Selection	0, 1	0

Setting 0: Normal Output

A positive PID input causes an increase in the PID output (direct acting).

Setting 1: Reverse Output

A positive PID input causes a decrease in the PID output (reverse acting).

■ b5-10: PID Output Gain Setting

Applies a gain to the PID output and can be helpful when the PID function is used to trim the frequency reference (b5-01 = 3 or 4).

No.	Name	Setting Range	Default
b5-10	PID Output Gain Setting	0.00 to 25.00	1.00

■ b5-11: PID Output Reverse Selection

Determines whether a negative PID output reverses the direction of drive operation. This parameter has no effect when the PID function trims the frequency reference (b5-01 = 3 or 4) and the PID output will not be limited (same as b5-11 = 1).

No.	Parameter Name	Setting Range	Default
b5-11	PID Output Reverse Selection	0, 1	0

Setting 0: Reverse Disabled

Negative PID output will be limited to 0 and the drive output will be stopped.

Setting 1: Reverse Enabled

Negative PID output will cause the drive to run in the opposite direction.

■ PID Feedback Loss Detection

The PID feedback loss detection function detects broken sensors or broken sensor wiring. It should be used when PID control is enabled to prevent critical machine conditions (e.g., acceleration to max. frequency) caused by a feedback loss.

Feedback loss can be detected in two ways:

- **Feedback Low Detection**

Detected when the feedback falls below a certain level for longer than the specified time. This function is set up using parameters b5-12 to b5-14.

- **Feedback High Detection**

  Detected when the feedback rises above a certain level for longer than the specified time. This function is set up using parameters b5-12, b5-36, and b5-37.

The following figure illustrates the working principle of feedback loss detection when the feedback signal is too low. Feedback high detection works in the same way.

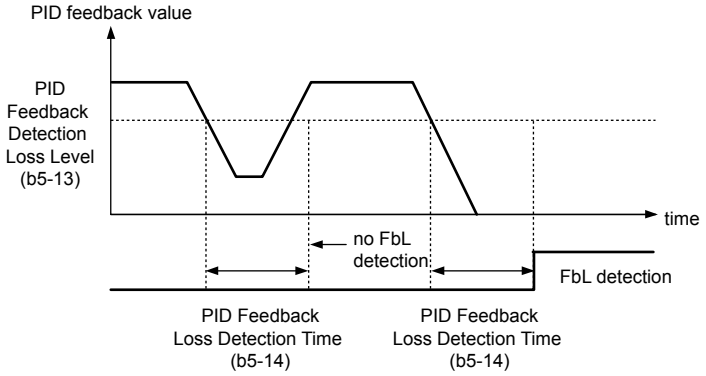

Figure 5.26 PID Feedback Loss Detection

■ b5-12: PID Feedback Loss Detection Selection

Enables or disables the feedback loss detection and sets the operation when a feedback loss is detected.

No.	Parameter Name	Setting Range	Default
b5-12	PID Feedback Loss Detection Selection	0 to 5	0

Setting 0: Multi-Function Digital Outputs Only

Multi-function digital outputs set for “PID feedback low” (H2-□□ = 3E) will be triggered if the PID feedback value is below the detection level set to b5-13 for the time set to b5-14 or longer. Multi-function digital outputs set for “PID feedback high” (H2-□□ = 3F) will be triggered if the PID feedback value is beyond the detection level set to b5-36 for longer than the time set to b5-37. Neither a fault nor an alarm is displayed on the digital operator and the drive will continue operation. The multi-function digital outputs reset when the feedback value leaves the loss detection range.

Setting 1: Feedback Loss Alarm

If the PID feedback value falls below the level set to b5-13 for longer than the time set to b5-14, a “FBL - Feedback Low” alarm will be displayed and a digital output set for “PID feedback low” (H2-□□ = 3E) will be triggered. If the PID feedback value exceeds the level set to b5-36 for longer than the time set to b5-37, a “FBH - Feedback High” alarm will be displayed and a digital output set for “PID feedback high” (H2-□□ = 3F) will be triggered. Both events trigger an alarm output (H2-□□ = 10). The drive will continue operation. The alarm and multi-function digital outputs reset when the feedback value leaves the loss detection range.

Setting 2: Feedback Loss Fault

If the PID feedback value falls below the level set to b5-13 for longer than the time set to b5-14, a “FbL - Feedback Low” fault will be displayed. If the PID feedback value exceeds the level set to b5-36 for longer than the time set to b5-37, a “FbH - Feedback High” fault will be displayed. Both events trigger a fault output (H2-□□ = E) and cause the drive to stop the motor.

Setting 3: Digital Output Only, even if PID Is Disabled by Digital Input

Same as b5-12 = 0. Detection remains active when PID is disabled by a digital input (H1-□□ = 19).

Setting 4: Feedback Loss Alarm, even if PID Is Disabled by Digital Input

Same as b5-12 = 1. Detection remains active when PID is disabled by a digital input (H1-□□ = 19).

Setting 5: Feedback Loss fault, even if PID Is Disabled by Digital Input

Same as b5-12 = 2. Detection remains active when PID is disabled by a digital input (H1-□□ = 19).

■ b5-13: PID Feedback Low Detection Level

Sets the PID feedback detection low level as a percentage of E1-04 (Maximum Output Frequency). The PID feedback must fall below this level for longer than the time set to b5-14 before feedback loss is detected.

No.	Name	Setting Range	Default
b5-13	PID Feedback Low Detection Level	0 to 100%	0%

■ b5-14: PID Feedback Low Detection Time

Sets the time that the PID feedback has to fall below b5-13 before feedback loss is detected.

No.	Name	Setting Range	Default
b5-14	PID Feedback Low Detection Time	0.0 to 25.5 s	1.0 s

■ b5-36: PID Feedback High Detection Level

Sets the excessive PID feedback detection high level as a percentage of E1-04 (Maximum Output Frequency). The PID feedback must exceed this level for longer than the time set to b5-37 before feedback loss is detected.

No.	Name	Setting Range	Default
b5-36	PID Feedback High Detection Level	0 to 100%	100%

■ b5-37: PID Feedback High Detection Time

Sets the time that the PID feedback must exceed the value set to b5-36 before feedback loss is detected.

No.	Name	Setting Range	Default
b5-37	PID Feedback High Detection Time	0.0 to 25.5 s	1.0 s

■ PID Sleep

The PID Sleep function stops the drive when the PID output or the frequency reference falls below the PID Sleep operation level for a certain time. The drive will resume operating when the PID output or frequency reference rise above the PID Sleep operation level for the specified time. An example of PID Sleep operation appears in the figure below.

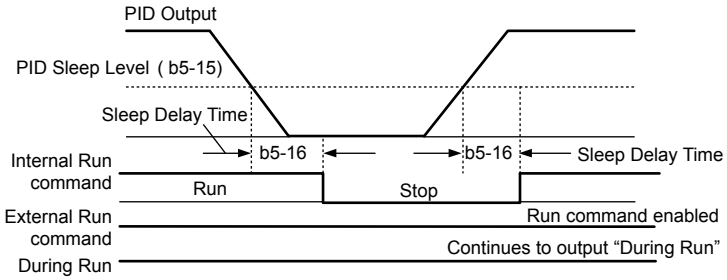

Figure 5.27 PID Sleep Operation

Notes on using the PID Sleep function

- The PID Sleep function is active even when PID control is disabled.
- The PID Sleep function stops the motor according to the stopping method set to b1-03.

The parameters necessary to control the PID Sleep function are explained below.

■ b5-15: PID Sleep Function Start Level

Sets the level that triggers PID Sleep.

The drive goes into Sleep mode if the PID output or frequency reference is smaller than b5-15 for longer than the time set to b5-16. The drive resumes operation when the PID output or frequency reference is above b5-15 for longer than the time set to b5-16.

No.	Name	Setting Range	Default
b5-15	PID Sleep Function Start Level	0.0 to 400.0 Hz <1>	0.0 Hz

<1> In AOLV/PM and CLV/PM control modes, the setting units and range are expressed as a percentage (0.0 to 100.0%).

■ b5-16: PID Sleep Delay Time

Sets the delay time to activate or deactivate the PID Sleep function.

No.	Name	Setting Range	Default
b5-16	PID Sleep Delay Time	0.0 to 25.5 s	0.0 s

■ b5-17: PID Accel/Decel Time

The PID acceleration/deceleration time is applied on the PID setpoint value.

When the setpoint changes quickly, the normal C1-□□ acceleration times reduce the responsiveness of the system as they are applied after the PID output. The PID accel/decel time helps avoid the hunting and overshoot and undershoot that can result from the reduced responsiveness.

The PID acceleration/deceleration time can be canceled using a digital input programmed for “PID SFS cancel” (H1-□□ = 34).

No.	Name	Setting Range	Default
b5-17	PID Accel/Decel Time	0.0 to 6000.0 s	0.0 s

■ b5-18: PID Setpoint Selection

Enables or disables parameter b5-19 for PID setpoint.

No.	Parameter Name	Setting Range	Default
b5-18	PID Setpoint Selection	0, 1	0

Setting 0: Disabled

Parameter b5-19 is not used as the PID setpoint.

Setting 1: Enabled

Parameter b5-19 is used as PID setpoint.

■ b5-19: PID Setpoint Value

Used as the PID setpoint if parameter b5-18 = 1.

No.	Name	Setting Range	Default
b5-19	PID Setpoint Value	0.00 to 100.00%	0.00%

■ b5-20: PID Setpoint Scaling

Determines the units for the PID Setpoint Value (b5-19) and monitors U5-01 and U5-04. The units for setting and display can be changed with b5-20.

No.	Parameter Name	Setting Range	Default
b5-20	PID Setpoint Scaling	0 to 3	1

Setting 0: 0.01 Hz

The setpoint and PID monitors are displayed in Hz with a resolution of 0.01 Hz.

Setting 1: 0.01% (100.00%: Maximum PID Feedback)

The setpoint and PID monitors are displayed as a percentage with a resolution of 0.01%.

Setting 2: r/min (Set the Motor Poles)

The setpoint and PID monitors are displayed in r/min with a resolution of 1 r/min.

Setting 3: User Defined (Determined by b5-38 and b5-39)

Parameters b5-38 and b5-39 determine the units and resolution used to display the values the setpoint in b5-19, and PID monitors U1-01 and U1-04.

■ b5-34: PID Output Lower Limit

Sets the minimum possible PID controller output as a percentage of the maximum output frequency (E1-04). The lower limit is disabled when set to 0.00%

No.	Name	Setting Range	Default
b5-34	PID Output Lower Limit	-100.0 to 100.0%	0.00%

■ b5-35: PID Input Limit

Sets the maximum allowed PID input as a percentage of the maximum output frequency (E1-04). Parameter b5-35 acts as a bipolar limit.

No.	Name	Setting Range	Default
b5-35	PID Input Limit	0.0 to 1000.0%	1000.0%

■ b5-38, b5-39: PID Setpoint User Display, PID Setpoint Display Digits

When parameter b5-20 is set to 3, parameters b5-38 and b5-39 set a user-defined display for the PID setpoint (b5-19) and PID feedback monitors (U5-01, U5-04).

Parameter b5-38 determines the display value when the maximum frequency is output and parameter b5-39 determines the number of digits. The setting value is equal to the number of decimal places.

No.	Name	Setting Range	Default
b5-38	PID Setpoint User Display	1 to 60000	Determined by b5-20
b5-39	PID Setpoint Display Digits	0 to 3	Determined by b5-20

Setting 0: No Decimal Places

Setting 1: One Decimal Place

Setting 2: Two Decimal Places

Setting 3: Three Decimal Places

■ b5-40: Frequency Reference Monitor Content During PID

Sets the content of the frequency reference monitor display (U1-01) when PID control is active.

No.	Name	Setting Range	Default
b5-40	Frequency Reference Monitor Content During PID	0, 1	0

Setting 0: Frequency Reference after PID

Monitor U1-01 displays the frequency reference increased or reduced for the PID output.

Setting 1: Frequency Reference

Monitor U1-01 displays the frequency reference value.

■ b5-47: PID Output Reverse Selection 2

Determines whether a negative PID output reverses the direction of drive operation. When the PID function is used to trim the frequency reference (b5-01 = 3 or 4), this parameter has no effect and the PID output will not be limited (same as b5-11 = 1).

No.	Name	Setting Range	Default
b5-47	PID Output Reverse Selection 2	0, 1	1

Setting 0: Reverse Disabled

Negative PID output will be limited to 0 and the drive output will be stopped.

Setting 1: Reverse Enabled

Negative PID output will cause the drive to run in the opposite direction.

■ Fine-Tuning PID

Follow the directions below to fine tune PID control parameters:

Table 5.12 PID Fine Tuning

Goal	Tuning Procedure	Result
Suppress overshoot	• Reduce the derivative time (b5-05) • Increase the integral time (b5-03)	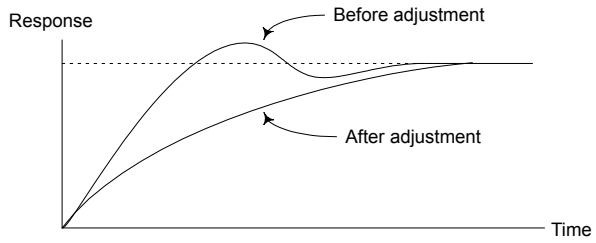
Achieve stability quickly while allowing some overshoot	• Decrease the integral time (b5-03) • Increase the derivative time (b5-05)	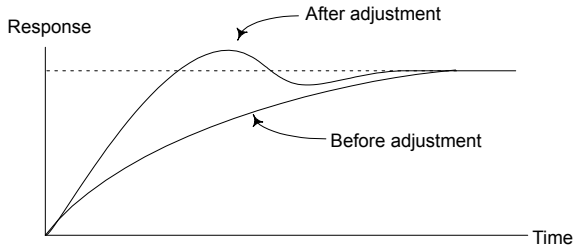
Suppress long cycle oscillations (longer than the integral time setting)	Increase the integral time (b5-03)	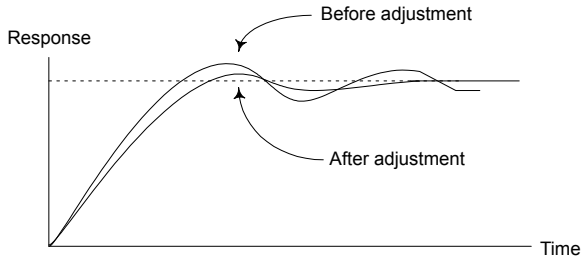
Suppress short cycle oscillations	• If oscillation cycle time is close to the derivative time, reduce the derivative time (b5-05). • If the derivative time is set to 0.00 s and oscillations are still a problem, reduce the proportional gain (b5-02) or increase the PID primary delay time (b5-08)	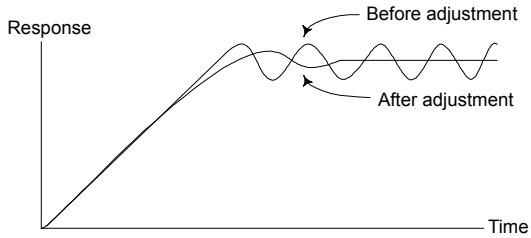

◆ b6: Dwell Function

The Dwell function temporarily holds the frequency reference at a predefined value for a set time then continues accelerating or decelerating.

The Dwell function helps prevent speed loss when starting and stopping a heavy load with induction motors. When running a PM motor in V/f control, the pause in acceleration allows the PM motor rotor to align with the stator field of the motor and reduce the starting current.

Figure 5.28 illustrates how the Dwell function works.

Note: Set the stopping method to "Ramp to Stop" (b1-03 = 0) to use the Dwell function.

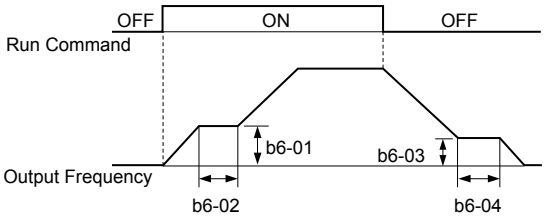

Figure 5.28 Dwell Function at Start and Stop

■ b6-01, b6-02: Dwell Reference, Dwell Time at Start

Parameter b6-01 determines the frequency that is held for the time set in b6-02 during acceleration.

No.	Name	Setting Range	Default
b6-01	Dwell Reference at Start	0.0 to 400.0 Hz	0.0 Hz
b6-02	Dwell Time at Start	0.0 to 10.0 s	0.0 s

■ b6-03, b6-04: Dwell Reference, Dwell Time at Stop

Parameter b6-03 determines the frequency that is held for the time set in b6-04 during deceleration.

No.	Name	Setting Range	Default
b6-03	Dwell Reference at Stop	0.0 to 400.0 Hz	0.0 Hz
b6-04	Dwell Time at Stop	0.0 to 10.0 s	0.0 s

◆ b7: Droop Control (CLV, CLV/PM)

Droop control automatically balances the load level between two motors driving the same load. Droop control must be activated in one of the drives controlling these motors. The drive in which Droop control is activated shifts the load from one motor to another by automatically reducing the speed when the torque reference rises, and automatically increasing the speed when the torque reference falls.

Note: Disable Feed Forward (n5-01 = 0) whenever using Droop control.

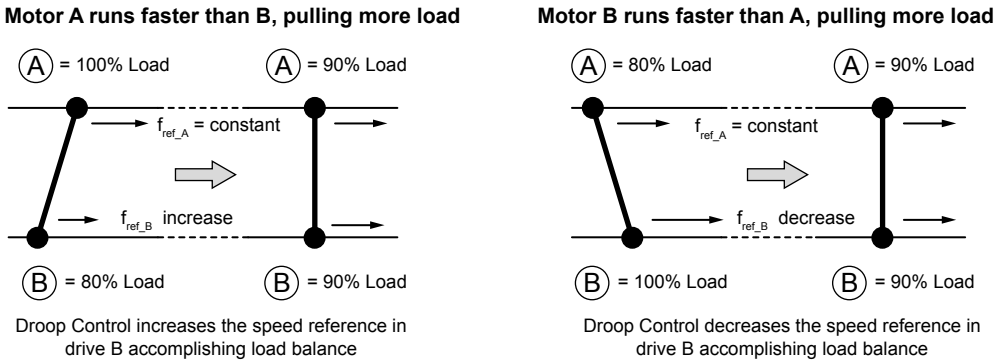

Figure 5.29 Droop Control Application

■ b7-01: Droop Control Gain

Sets the amount of speed reduction when the torque reference is 100%. The gain is set as a percentage of the maximum output frequency. A setting of 0.0% disables the Droop control function.

No.	Parameter Name	Setting Range	Default
b7-01	Droop Control Gain	0.0 to 100.0%	0.0%

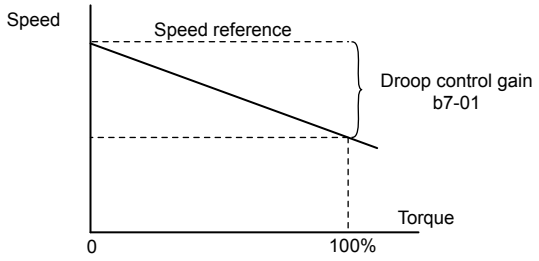

Figure 5.30 Droop Control Gain

■ b7-02: Droop Control Delay Time

Adjusts the responsiveness of Droop control. Reduce the setting if the reaction time is too long, and increase the setting if hunting occurs.

No.	Parameter Name	Setting Range	Default
b7-02	Droop Control Delay Time	0.03 to 2.00 s	0.05 s

■ b7-03: Droop Control Limit Selection

Enables or disables the droop control limit.

No.	Parameter Name	Setting Range	Default
b7-03	Droop Control Limit Selection	0, 1	1

Setting 0: Disabled

Setting 1: Enabled

◆ b8: Energy Saving

The Energy Saving feature improves overall system operating efficiency by operating the motor at its most efficient level.

Note:
1. Energy Saving is not designed for applications that experience instantaneous heavy loads or applications that rarely operate with light load conditions.
2. Energy Saving is designed for applications with variable torque (Normal Duty) and is not appropriate for applications where the load may suddenly increase.
3. The performance of the Energy Saving function depends on the accuracy of the motor data. Always perform Auto-Tuning and correctly enter the motor data before using this function.

■ b8-01: Energy Saving Control Selection

Enables or disables the Energy Saving function.

Note: Enabling the Energy Saving function when using a PM motor may adversely affect motor efficiency depending on the type of PM motor. Disable the Energy Saving function in such cases.

No.	Parameter Name	Setting Range	Default
b8-01	Energy Saving Control Selection	0, 1	Determined by A1-02

Setting 0: Disabled

Setting 1: Enabled

■ b8-02: Energy Saving Gain (OLV, CLV)

Sets the gain level for Energy Saving. A higher value results in lower magnetization of the motor and less energy consumption. If the value is set too high the motor may stall.

No.	Name	Setting Range	Default
b8-02	Energy Saving Gain	0.0 to 10.0	Determined by A1-02

■ b8-03: Energy Saving Control Filter Time Constant (OLV, CLV)

Sets the response time for Energy Saving. A lower value allows for a quicker response; however a value that is too low may cause instability.

No.	Name	Setting Range	Default
b8-03	Energy Saving Control Filter Time Constant	0.00 to 10.00 s	Determined by A1-02 and o2-04

■ b8-04: Energy Saving Coefficient Value (V/f, V/f w/PG)

Fine tunes Energy Saving control.

The default setting is for a standard Yaskawa motor. When using a different motor, adjust this parameter in 5% increments until output power monitor U1-08 is at the minimum value, while running the drive with a light load.

A low setting results in less output voltage and less energy consumption. If the value is set too low the motor may stall. The default setting depends on the capacity of the drive.

No.	Name	Setting Range	Default
b8-04	Energy Saving Coefficient Value	0.00 to 655.00	Determined by C6-01, E2-11, and o2-04

Note: The default value changes if the motor rated capacity set to E2-11 is changed. The Energy Saving coefficient is set automatically when Auto-Tuning for Energy Saving is performed (***Refer to Auto-Tuning on page 176***).

■ b8-05: Power Detection Filter Time (V/f, V/f w/PG)

Determines how often in milliseconds the output power is measured. The Energy Saving function continuously searches out the lowest output voltage to achieve minimum output power.

Reducing this setting increases the response time. If the filter time is too short, the motor may become unstable with a lighter load.

No.	Name	Setting Range	Default
b8-05	Power Detection Filter Time	0 to 2000 ms	20 ms

■ b8-06: Search Operation Voltage Limit (V/f, V/f w/PG)

Sets the voltage limit for the Speed Search optimal output voltage detection as a percentage of the maximum output voltage. The drive will keep the output voltage above this level during the search operation to prevent motor stalling.

Note: If set too low, the motor may stall when the load is suddenly increased. Disabled when set to 0. Setting this value to 0 does not disable Energy Saving.

No.	Name	Setting Range	Default
b8-06	Search Operation Voltage Limit	0 to 100%	0%

■ b8-16: Energy Saving Parameter (Ki) for PM Motors

Coefficient to adjust torque linearity.

Set to the Ki value specified on the motor nameplate.

Setting E5-01, Motor Code Selection (for PM Motors), to 1□□□ or 2□□□ automatically sets the calculated value. This set value cannot be changed. If oscillation occurs when Energy Saving is enabled (b8-01 = 1), check the value displayed in monitor U5-21. If the value displayed differs from the Ki value written on the motor nameplate, set b8-16 accordingly.

No.	Name	Setting Range	Default
b8-16	Energy Saving Parameter (Ki) for PM Motors	0.00 to 3.00 <1>	1.00

<1> Setting range is 0.00 to 2.00 in models 4A0930 and 4A1200, and in drive software versions PRG: 1018 and earlier.

■ b8-17: Energy Saving Parameter (Kt) for PM Motors

Coefficient to adjust torque linearity.

Set to the Kt value specified on the motor nameplate.

Setting E5-01, Motor Code Selection (for PM Motors), to 1□□□ or 2□□□ automatically sets the calculated value. This set value cannot be changed. If oscillation occurs when Energy Saving is enabled (b8-01 = 1), check the value displayed in monitor U5-22. If the value displayed differs from the Kt value written on the motor nameplate, set b8-17 accordingly.

No.	Name	Setting Range	Default
b8-17	Energy Saving Parameter (Kt) for PM Motors	0.00 to 3.00 <1>	1.00

<1> Setting range is 0.00 to 2.00 in models 4A0930 and 4A1200, and in drive software versions PRG: 1018 and earlier.

■ b8-27: q-Axis Current Compensation Method when Output Voltage is Limited

Sets a compensation method for the q-Axis current when output voltage is limited. There is normally no need to change this parameter from the default value.

Note: This parameter is not available in models 4A0930 and 4A1200.

No.	Name	Setting Range	Default
b8-27	q-Axis Current Compensation Method when Output Voltage is Limited	0, 1	0

Setting 0: Output Voltage Limit Priority

Setting 1: q-Axis Current Priority

◆ b9: Zero Servo

The Zero Servo function is a position loop that can be used to lock the motor at a certain position against external power to the motor.

The drive will enter Zero Servo mode and maintain the current position when the following three conditions are true:

- The drive has an active Run command.
- A digital input programmed for Zero Servo (H1-□□ = 72) is closed.
- The motor speed falls below b2-01 setting.

The drive accelerates when the input assigned to trigger the Zero Servo function is released and the Run command is still present according to the speed reference.

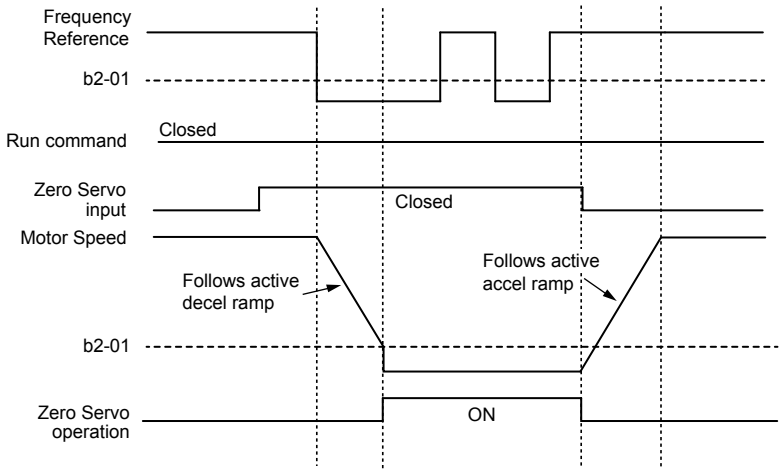

Figure 5.31 Zero Servo Operation

When Zero Servo mode is active, the deviation between the rotor position and the zero position is displayed in monitor U6-22 (monitor value must be divided by 4 to get the deviation in actual encoder pulses).

A digital output programmed for "Zero Servo complete" (H2-□□ = 33) is turned on when the rotor position is within the zero position, plus or minus the Zero Servo completion width set to parameter b9-02.

Note:
1. The Run command must remain on when using the Zero Servo function. Zero Servo will not hold the load in place if the Run command is switched off.
2. When the Zero Servo command has shut off, the Zero Servo Completion digital output also shuts off.
3. Avoid using Zero Servo to lock 100% load for long periods, as this can trigger a fault. If such loads need to be held in place for long periods, either make sure the current is less than 50% of the drive rated current during Zero Servo, or use a larger capacity drive.
4. If the load rotates the motor when using CLV/PM, a dv4 fault may occur. To prevent this, either increase the Zero Servo gain (b9-01) or increase the number of pulses set to F1-19 that are required to trigger dv4.

■ b9-01: Zero Servo Gain

Adjusts the responsiveness of the Zero Servo position loop. Increase the value if the response is too slow and the deviation from the zero position rises too high when load is applied. Decrease the value if vibrations occur during Zero Servo operation.

Note: Before adjusting the Zero Servo gain, make sure the ASR parameters (C5-□□) are set up properly and vibration or hunting does not occur when running with a zero speed reference.

No.	Name	Setting Range	Default
b9-01	Zero Servo Gain	0 to 100	5

■ b9-02: Zero Servo Completion Width

Sets the output range of the Zero Servo completion signal. Enter the amount of deviation allowable from the desired position to trigger Zero Servo. An output terminal set for Zero Servo (H2-□□ = 33) will be triggered when the motor reaches the position Zero Servo plus or minus b9-02.

No.	Name	Setting Range	Default
b9-02	Zero Servo Completion Width	0 to 16383	10

5.3 C: Tuning

C parameters set the characteristics for acceleration, deceleration, and S-curves. Other parameters in the C group cover settings for slip compensation, torque compensation, and carrier frequency.

◆ C1: Acceleration and Deceleration Times

■ C1-01 to C1-08: Accel, Decel Times 1 to 4

Four different sets of acceleration and deceleration times can be set in the drive by digital inputs, motor selection, or switched automatically.

Acceleration time parameters always set the time to accelerate from 0 Hz to the maximum output frequency (E1-04). Deceleration time parameters always set the time to decelerate from maximum output frequency to 0 Hz. C1-01 and C1-02 are the default active accel/decel settings.

No.	Parameter Name	Setting Range	Default
C1-01	Acceleration Time 1	0.0 to 6000.0 s <1>	10.0 s
C1-02	Deceleration Time 1		
C1-03	Acceleration Time 2		
C1-04	Deceleration Time 2		
C1-05	Acceleration Time 3 (Motor 2 Accel Time 1)		
C1-06	Deceleration Time 3 (Motor 2 Decel Time 1)		
C1-07	Acceleration Time 4 (Motor 2 Accel Time 2)		
C1-08	Deceleration Time 4 (Motor 2 Decel Time 2)		

<1> The setting range for the acceleration and deceleration times is determined by the accel/decel time setting units in C1-10. For example, if the time is set in units of 0.01 s (C1-10 = 0), the setting range becomes 0.00 to 600.00 s.

Switching Acceleration Times by Digital Input

Accel/decel times 1 are active by default if no input is set. Activate accel/decel times 2, 3, and 4 by digital inputs (H1-□□ = 7 and 1A) as explained in *Table 5.13*.

Table 5.13 Accel/Decel Time Selection by Digital Input

Accel/Decel Time Sel. 1 H1-□□ = 7	Accel/Decel Time Sel. 2 H1-□□ = 1A	Active Times	
		Acceleration	Deceleration
0	0	C1-01	C1-02
1	0	C1-03	C1-04
0	1	C1-05	C1-06
1	1	C1-07	C1-08

Figure 5.32 shows an operation example for changing accel/decel. times. The example below requires that the stopping method be set for “Ramp to stop” (b1-03 = 0).

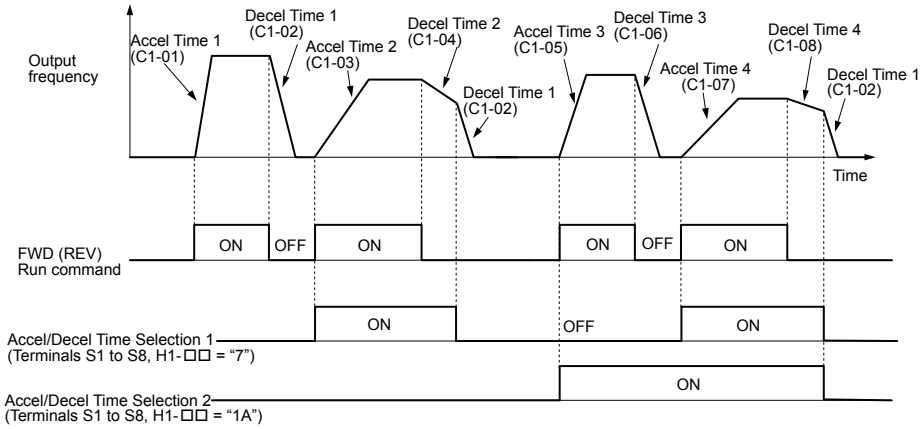

Figure 5.32 Timing Diagram of Accel/Decel Time Change

Switching Acceleration and Deceleration Times by Motor Selection

When switching between motor 1 and 2 using a digital input (H1-□□= 16), parameters C1-01 to C1-04 become accel/decel times 1 and 2 for motor 1, while C1-05 to C1-08 become accel/decel times 1 and 2 for motor 2. Accel/decel times 1 and 2 can be switched for each motor using a digital inputs set to H1-□□ = 7 like shown in *Table 5.14*.

Note: 1. The motor 2 selection function cannot be used with PM motors.
2. Attempting to use the digital input setting "Accel/Decel time 2 selection" (H1-□□ = 1A) together with motor 1/2 switching triggers an oPE03 error, indicating contradictory multifunction input settings.

Table 5.14 Motor Switching and Accel/Decel Time Combinations

Accel/Decel Time 1 (H1-□□ = 7)	Motor 1 Selected (Terminal set to H1-□□ = 16 OFF)		Motor 2 Selected (Terminal set to H1-□□ = 16 ON)	
	Accel	Decel	Accel	Decel
Open	C1-01	C1-02	C1-05	C1-06
Closed	C1-03	C1-04	C1-07	C1-08

Switching Accel/Decel Times by a Frequency Level

The drive can switch between different acceleration and deceleration times automatically. The drive will switch from accel/decel time 4 in C1-07 and C1-08 to the default accel/decel time in C1-01 and C1-02 (C1-05 and C1-06 for motor 2) when the output frequency exceeds the frequency level set to parameter C1-11. When the frequency falls below this level, the accel/decel times are switched back. *Figure 5.33* shows an operation example.

Note: Acceleration and deceleration times selected by digital inputs have priority over the automatic switching by the frequency level set to C1-11. For example, if accel/decel time 2 is selected, the drive will use only accel/decel time 2; it will not switch from accel/decel time 4 to the selected one.

$$\text{C1-03} = \frac{(\text{accel time from 0 Hz to C1-11}) \times (\text{E1-04})}{\text{C1-11}}$$

$$\text{C1-01} = \frac{(\text{accel time between C1-11 and E1-04}) \times (\text{E1-04})}{(\text{E1-04 - C1-11})}$$

$$\text{C1-02} = \frac{(\text{decel time between E1-04 and C1-11}) \times (\text{E1-04})}{(\text{E1-04 - C1-11})}$$

$$\text{C1-04} = \frac{(\text{decel time from C1-11 to 0 Hz}) \times (\text{E1-04})}{\text{C1-11}}$$

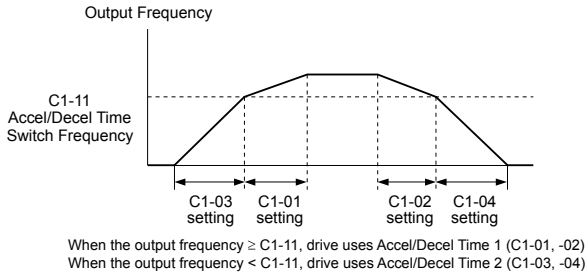

Figure 5.33 Accel/Decel Time Switching Frequency

■ C1-09: Fast Stop Time

Sets a special deceleration used when a select group of faults occur (e.g., L8-03 Overheat Pre-Alarm Operation Selection) or when closing a digital input configured as H1-□□ = 15 (N.O. input) or 17 (N.C. input). A momentary closure of the input terminal will trigger the Fast Stop operation; it does not need to be closed continuously.

It is not possible to restart the drive after initiating a Fast Stop operation until after completing deceleration, clearing the Fast Stop input, and cycling the Run command.

A digital output programmed for "During Fast Stop" (H2-□□ = 4C) will be closed as long as Fast Stop is active.

No.	Parameter Name	Setting Range	Default
C1-09	Fast Stop Time	0.0 to 6000.0 s <1>	10.0 s

<1> The setting range for the Fast Stop Time is determined by the accel/decel time setting units in C1-10. For example, if the time is set in units of 0.01 s (C1-10 = 0), the setting range becomes 0.00 to 600.00 s

NOTICE: *Rapid deceleration can trigger an overvoltage fault. The drive output shuts off when faulted and the motor coasts. Set an appropriate Fast Stop time to C1-09 to avoid this uncontrolled motor state and to ensure that the motor stops quickly and safely.*

■ C1-10: Accel/Decel Time Setting Units

Determines the units for the acceleration and deceleration times set to C1-01 through C1-09 using parameter C1-10.

No.	Parameter Name	Setting Range	Default
C1-10	Accel/Decel Time Setting Units	0, 1	1

Setting 0: 0.01 s units

The accel/decel times are set in 0.01 s units. The setting range is 0.00 to 600.00 s. C1-10 cannot be set to 0 if any of the parameters C1-01 through C1-09 are set to 600.1 s or longer.

Setting 1: 0.1 s units

The accel/decel times are set in 0.1 s units. The setting range is 0.0 to 6000.0 s.

■ C1-11: Accel/Decel Time Switching Frequency

Sets the frequency at which the drive switches between accel/decel time settings. *Refer to Switching Accel/Decel Times by a Frequency Level on page 240* for details.

No.	Parameter Name	Setting Range	Default
C1-11	Accel/Decel Time Switching Frequency	0.0 to 400.0 Hz <1>	Determined by A1-02 <1>

<1> In AOLV/PM and CLV/PM control modes, the setting units and range are expressed as a percentage (0.0 to 100.0%) instead of in Hz.

Note: Setting C1-11 to 0.0 disables this function.

◆ C2: S-Curve Characteristics

Use S-curve characteristics to smooth acceleration and deceleration and minimize abrupt shock to the load. Set S-curve characteristic time during acceleration/deceleration at start and acceleration/deceleration at stop. Increase the value set to C2-01 if the STo fault (Step Out Detection) occurs when starting a PM motor.

■ C2-01 to C2-04: S-Curve Characteristics

C2-01 through C2-04 set separate S-curves for each section of the acceleration or deceleration.

No.	Parameter Name	Setting Range	Default
C2-01	S-Curve Characteristic at Accel Start	0.00 to 10.00 s	Determined by A1-02
C2-02	S-Curve Characteristic at Accel End		0.20 s
C2-03	S-Curve Characteristic at Decel Start		0.20 s
C2-04	S-Curve Characteristic at Decel End		0.00 s

Figure 5.34 illustrates S-curve application.

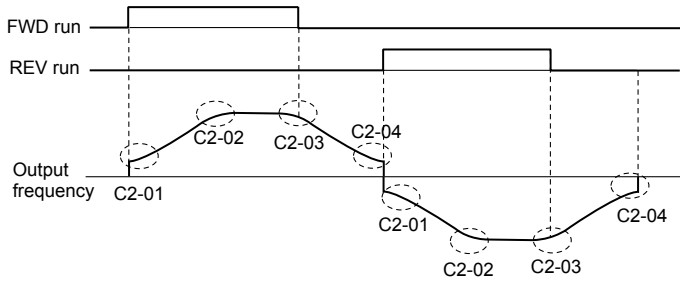

Figure 5.34 S-Curve Timing Diagram - FWD/REV Operation

Setting the S-curve will increase the acceleration and deceleration times.

- Actual accel time = accel time setting + (C2-01 + C2-02) / 2
- Actual decel time = decel time setting + (C2-03 + C2-04) / 2

◆ C3: Slip Compensation

The Slip Compensation function improves the speed accuracy of an induction motor. By adjusting the output frequency in accordance with the motor load, it compensates the slip and makes the motor speed equal to the frequency reference.

Note: Perform Auto-Tuning and make sure that the motor rated current (E2-01), the motor rated slip (E2-02), and the no-load current (E2-03) have all been set properly before making any adjustments to slip compensation parameters.

■ C3-01: Slip Compensation Gain

Sets the gain for the motor slip compensation function. Although this parameter rarely needs to be changed, adjustments may be necessary under the following circumstances:

- Increase the setting if the motor at constant speed is slower than the frequency reference.
- Decrease the setting if the motor at constant speed is faster than the frequency reference.

No.	Parameter Name	Setting Range	Default
C3-01	Slip Compensation Gain	0.0 to 2.5	Determined by A1-02

Note: Default setting is 0.0 in V/f Control (A1-02 = 0), and 1.0 in Open Loop Vector Control (A1-02 = 2). In Closed Loop Vector Control, slip compensation corrects inaccuracies that can result from temperature fluctuation in the rotor.

■ C3-02: Slip Compensation Primary Delay Time

Adjusts the filter on the output side of the slip compensation function. Although this parameter rarely needs to be changed, adjustments may be necessary in the following situations:

- Decrease the setting when the slip compensation response is too slow.
- Increase this setting when speed is unstable.

No.	Parameter Name	Setting Range	Default
C3-02	Slip Compensation Primary Delay Time	0 to 10000 ms	Determined by A1-02

Note: Default for V/f Control (A1-02 = 0) is 2000 ms. Default for Open Loop Vector Control (A1-02 = 2) is 200 ms.

■ C3-03: Slip Compensation Limit

Sets the upper limit for the slip compensation function as a percentage of the motor rated slip (E2-02).

No.	Parameter Name	Setting Range	Default
C3-03	Slip Compensation Limit	0 to 250%	200%

The slip compensation limit is constant throughout the constant torque range (frequency reference ≤ E1-06). In the constant power range (frequency reference ≥ E1-06), it is increased based on C3-03 and the output frequency as shown in the following diagram.

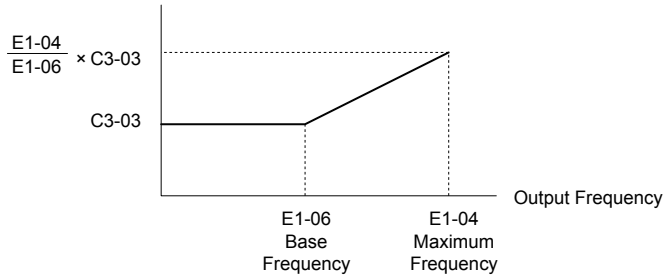

Figure 5.35 Slip Compensation Limit

■ C3-04: Slip Compensation Selection during Regeneration

Enables or disables slip compensation during regenerative operation. When slip compensation during regeneration has been activated and a regenerative load is applied, it might be necessary to use a dynamic braking option (braking resistor, braking resistor unit, or braking unit).

This function does not operate when the output frequency is too low, regardless of whether it has been enabled.

No.	Parameter Name	Setting Range	Default
C3-04	Slip Compensation Selection during Regeneration	0 to 2	0

Setting 0: Disabled

Slip compensation is not provided. Depending on the load and mode of operation, the actual motor speed will be lower or higher than the frequency reference.

Setting 1: Enabled (6 Hz and above)

Slip compensation is enabled during regenerative operation. It will not be active at output frequencies below 6 Hz.

Setting 2: Enabled (compensation provided wherever possible)

Slip compensation is enabled during regenerative operation and at frequencies as low as 2 Hz. The drive uses the motor rated slip set to E2-02 to automatically calculate the frequency range where compensation will be disabled.

■ C3-05: Output Voltage Limit Operation Selection

Determines if the motor flux reference is automatically reduced when output voltage reaches the saturation range.

If the input power supply voltage is low or the motor has a high voltage rating, this function improves the speed precision when moving heavy loads at high speeds. When selecting the drive, remember that the reduction in flux causes a slightly higher current at high speed when this function is enabled.

No.	Parameter Name	Setting Range	Default
C3-05	Output Voltage Limit Operation Selection	0, 1	0

Note: Available control modes for parameter C3-05 vary by drive model:
Models 2A0004 to 2A0415, 4A0002 to 4A0675, and 5A0003 to 5A0242: Available when A1-02 = 2, 3
Models 4A0930 and 4A1200: Available when A1-02 = 2, 3, 6, 7

Setting 0: Disabled

Setting 1: Enabled

■ C3-16: Output Voltage Limit Operation Start Level (Percentage Modulation)

Sets the output voltage limit operation start level (percentage modulation) when C3-05 is enabled.

Note: This parameter is only available in models 4A0930 and 4A1200.

No.	Parameter Name	Setting Range	Default
C3-16	Output Voltage Limit Operation Start Level	70.0 to 90.0%	85.0%

■ C3-17: Maximum Output Voltage Limit Level (Percentage Modulation)

Sets the output voltage limit operation determined by C3-18 (percentage modulation) when C3-05 is enabled.

Note: This parameter is only available in models 4A0930 and 4A1200.

No.	Parameter Name	Setting Range	Default
C3-17	Maximum Output Voltage Limit Level	85.0 to 100.0%	90.0%

■ C3-18: Output Voltage Limit Level

Sets the maximum percentage of output voltage reduction when C3-05 is enabled.

Note: This parameter is only available in models 4A0930 and 4A1200.

No.	Parameter Name	Setting Range	Default
C3-18	Output Voltage Limit Level	30.0 to 100.0%	90.0%

■ C3-21: Motor 2 Slip Compensation Gain

Improves the speed accuracy for motor 2 and functions in the same way that C3-01 functions for motor 1. Adjust this parameter only after setting the motor rated current (E4-01), motor rated slip (E4-02), and the motor no-load current (E4-03).

Refer to C3-01: Slip Compensation Gain on page 241 for details on adjusting this parameter.

No.	Parameter Name	Setting Range	Default
C3-21	Motor 2 Slip Compensation Gain	0.0 to 2.5	Determined by E3-01

Note: Default setting is 0.0 in V/f Control (E3-01 = 0). Default setting is 1.0 in Open Loop Vector Control (E3-01 = 2) and Closed Loop Vector Control (E3-01 = 3). In Closed Loop Vector Control, slip compensation gain acts as an adaptable gain.

■ C3-22: Motor 2 Slip Compensation Primary Delay Time

Functions for motor 2 the same way that C3-02 functions for motor 1.

Refer to C3-02: Slip Compensation Primary Delay Time on page 242 for details on adjusting this parameter.

No.	Parameter Name	Setting Range	Default
C3-22	Motor 2 Slip Compensation Primary Delay Time	0 to 10000 ms	Determined by A1-02

Note: The default for V/f Control (E3-01 = 0) is 2000 ms. The default for Open Loop Vector Control (E3-01 = 2) is 200 ms.

■ C3-23: Motor 2 Slip Compensation Limit

Sets the upper limit for the slip compensation function as a percentage of the motor rated slip (E4-02).

No.	Parameter Name	Setting Range	Default
C3-23	Motor 2 Slip Compensation Limit	0 to 250%	200%

The slip compensation limit is constant throughout the constant torque range (frequency reference ≤ E3-06). In the constant power range (frequency reference ≥ E3-06), it is increased based on C3-23 and the output frequency as illustrated in *Figure 5.36*.

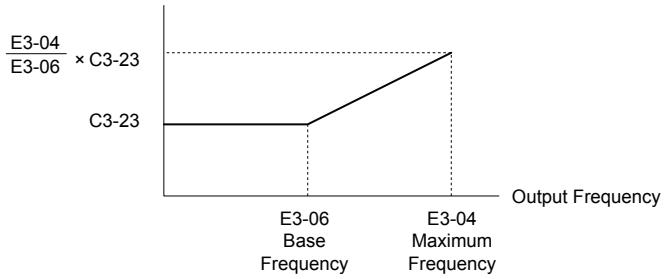

Figure 5.36 Slip Compensation Limit

■ C3-24: Motor 2 Slip Compensation Selection during Regeneration

Functions for motor 2 the same way that C3-04 functions for motor 1.

Refer to C3-04: Slip Compensation Selection during Regeneration on page 242 for details on adjusting this parameter.

No.	Parameter Name	Setting Range	Default
C3-24	Motor 2 Slip Compensation Selection during Regeneration	0 to 2	0

Setting 0: Disabled

Setting 1: Enabled (6 Hz and above)

Setting 2: Enabled (compensation provided wherever possible)

◆ C4: Torque Compensation

The torque compensation function compensates for insufficient torque production at start-up or when a load is applied.

Note: Set the motor parameters and V/f pattern properly before setting torque compensation parameters.

■ C4-01: Torque Compensation Gain

Sets the gain for the torque compensation function.

No.	Parameter Name	Setting Range	Default
C4-01	Torque Compensation Gain	0.00 to 2.50	Determined by A1-02

Torque Compensation in V/f, V/f w/PG, and OLV/PM:

The drive calculates the motor primary voltage loss using the output current and the termination resistor value (E2-05 for IM motors, E5-05 for PM motors) and adjusts the output voltage to compensate for insufficient torque at start or when load is applied. The effects of this voltage compensation can be increased or decreased using parameter C4-01.

Torque Compensation in OLV:

The drive controls the motor excitation current (d-Axis current) and torque producing current (q-Axis current) separately. Torque compensation affects the torque producing current only. C4-01 works as a factor of the torque reference value that builds the torque producing current reference.

Adjustment

Although this parameter rarely needs to be changed, it may be necessary to adjust the torque compensation gain in small steps of 0.05 in the following situations:

- Increase this setting when using a long motor cable.

- Decrease this setting when motor oscillation occurs.

Adjust C4-01 so the output current does not exceed the drive rated current.

Note: 1. Refrain from adjusting torque compensation in Open Loop Vector Control, as it can have a negative effect on torque accuracy.
2. Refrain from adjusting this parameter in OLV/PM. Setting this value too high can cause overcompensation and motor oscillation.

■ C4-02: Torque Compensation Primary Delay Time

Sets the delay time used for applying torque compensation.

No.	Parameter Name	Setting Range	Default
C4-02	Torque Compensation Primary Delay Time	0 to 60000 ms	Determined by A1-02

Adjustment

Although C4-02 rarely needs to be changed, adjustments may be necessary in the following situations:

- Increase this setting if the motor vibrates.
- Decrease this setting if the motor responds too slowly to changes in the load.

■ C4-03: Torque Compensation at Forward Start (OLV)

Sets the amount of torque at start in the forward direction to improve motor performance during start with a heavy load. Compensation is applied using the time constant set in parameter C4-05. Enable this function when the load pulls the motor in reverse when starting with a Forward run command. Setting 0.0% disables this feature.

No.	Parameter Name	Setting Range	Default
C4-03	Torque Compensation at Forward Start	0.0 to 200.0%	0.0%

■ C4-04: Torque Compensation at Reverse Start (OLV)

Sets the amount of torque reference at start in the reverse direction to improve motor performance during start with heavy load. Compensation is applied using the Torque Compensation Time set in parameter C4-05. Enable this function if the load pulls the motor in the forward direction when starting with a Reverse run command. Setting 0.0% disables this feature.

No.	Parameter Name	Setting Range	Default
C4-04	Torque Compensation at Reverse Start	-200.0 to 0.0%	0.0%

■ C4-05: Torque Compensation Time Constant (OLV)

Sets the time constant for applying the torque compensation at start that is set to C4-03 and C4-04.

No.	Parameter Name	Setting Range	Default
C4-05	Torque Compensation Time Constant	0 to 200 ms	10 ms

■ C4-06: Torque Compensation Primary Delay Time 2 (OLV)

Sets the time constant used during Speed Search or during regenerative operation. Adjust the value if an overvoltage fault occurs with sudden changes in the load or at the end of acceleration with high inertia load.

No.	Parameter Name	Setting Range	Default
C4-06	Torque Compensation Primary Delay Time 2	0 to 10000 ms	150 ms

Note: If C4-06 is set to a relatively large value, increase the setting in n2-03 (AFR Time Constant 2) proportionally.

■ C4-07: Motor 2 Torque Compensation Gain

Functions for motor 2 the same way that C4-01 functions for motor 1.

Refer to C3-01: Slip Compensation Gain on page 241 for details on adjusting this parameter.

No.	Parameter Name	Setting Range	Default
C4-07	Motor 2 Torque Compensation Gain	0.00 to 2.50	1.00

◆ C5: Automatic Speed Regulator (ASR)

The ASR controls the motor speed in V/f w/PG, CLV, AOLV/PM, and CLV/PM control modes and adjusts the output frequency (V/f w/PG) or torque reference (CLV, AOLV/PM, CLV/PM) to minimize the difference between frequency reference and actual motor speed.

Figure 5.37 and *Figure 5.38* illustrate ASR functionality:

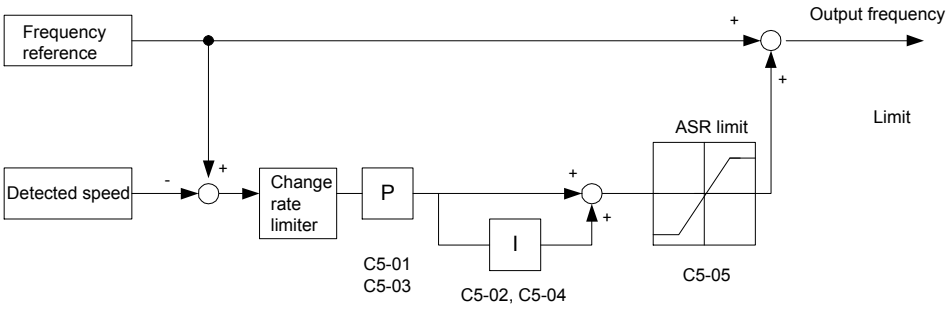

Figure 5.37 Speed Control Block Diagram for V/f Control with PG

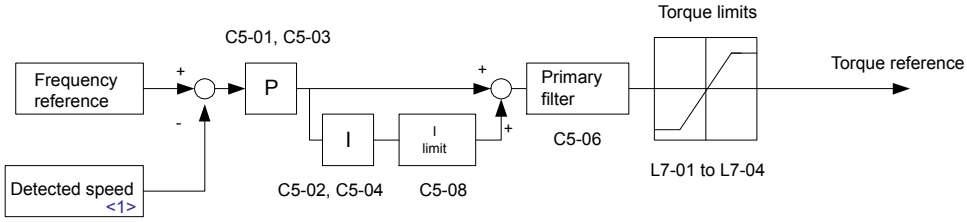

Figure 5.38 Speed Control Block Diagram for CLV, AOLV/PM and CLV/PM

<1> AOLV/PM estimates the speed using the motor model and does not require an encoder feedback signal.

■ Adjusting the ASR Parameters

Perform Auto-Tuning and set up all motor data correctly prior to adjusting ASR parameters.

Use analog output signals to monitor the frequency reference after softstarter (U1-16) and the motor speed (U1-05) when adjusting the ASR. *Refer to H4: Multi-Function Analog Outputs on page 326* for details on setting up analog output functions.

Generally when tuning the ASR, optimize the ASR gain before adjusting the integral time settings. Always make adjustments with the load connected to the motor.

Adjusting the ASR Parameters in V/f Control with PG

In V/f Control with PG, the ASR settings change between two sets of parameters depending on the motor speed as described in *C5-01, C5-03/C5-02, C5-04: ASR Proportional Gain 1, 2/ASR Integral Time 1, 2* on page *248*.

Perform the following steps for adjusting ASR parameters:

1. Run the motor at minimum speed and increase ASR gain 2 (C5-03) as much as possible without oscillation.
2. Run the motor at minimum speed and decrease ASR integral time 2 (C5-04) as much as possible without oscillation.
3. Check the output current monitor to make sure that the output current is less than 50% of the drive rated current. If the value is higher than 50%, decrease C5-03 and increase C5-04.
4. Run the motor at maximum speed and increase ASR gain 1 (C5-01) as much as possible without oscillations.
5. Run the motor at maximum speed and decrease ASR integral time 1 (C5-02) as much as possible without oscillations.
6. If higher speed precision and faster response during acceleration or deceleration are required, enable integral control during accel/decel by setting parameter C5-12 to 1. Change the speed and make sure no over/undershoot occurs.

Adjusting the ASR Parameters in CLV, AOLV/PM, and CLV/PM

The drive is preset to use ASR settings C5-01/02 over the entire speed range in CLV, AOLV/PM, and CLV/PM. If required by the application, a second set of ASR parameters (C5-03/04) can be automatically activated depending on the motor speed. Use a digital input to activate the second ASR Gain (C5-03). *Refer to C5-01, C5-03/C5-02, C5-04: ASR Proportional Gain 1, 2/ASR Integral Time 1, 2 on page 248* for details.

Perform the following steps for adjusting ASR parameters:

1. Run the motor at zero speed and increase the ASR gain (C5-01) as much as possible without oscillation.
2. Run the motor at zero speed and decrease the ASR integral time (C5-02) as much as possible without oscillation.
3. Run at the normal operating speed. Check for over/undershoot when changing speed and for any oscillation.
4. If problems occur in step 3, increase the integral time and reduce the gain.
   Alternatively, use different ASR settings for high and low speed. Set the values from step 1 and 2 to parameters C5-03 and C5-04, then set an ASR switching frequency in parameter C5-07. Run the motor at a speed higher than C5-07 and repeat step 3 while adjusting C5-01 and C5-02.

Solving Problems During ASR Setup

Use *Table 5.15* when making adjustments to ASR. Though the parameters listed below are for motor 1, the same changes can be made to the corresponding motor 2 parameters when running a second motor.

Table 5.15 ASR Setup Problems and Corrective Actions

Problem		Possible Solutions
Slow response to speed changes or speed deviation lasts for too long	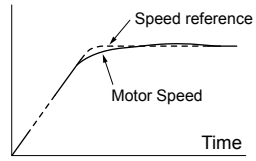	• Increase the ASR gain. • Decrease the integral time.
Overshoot or undershoot at the end of acceleration or deceleration	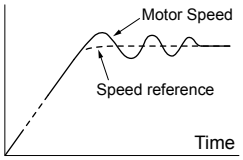	• Decrease the ASR gain. • Increase the integral time.
Vibration and oscillation occur at constant speed	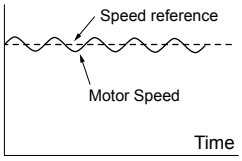	• Decrease the ASR gain. • Increase the integral time. • Increase the ASR delay time (C5-06).
The motor slip is not fully compensated when running in V/f Control with PG	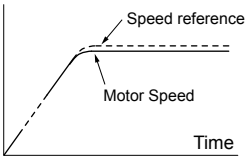	• Check the pulse number set to F1-01 and the gear ratio in F1-12 and F1-13. • Make sure the pulse signal from the encoder is set up properly. • Check monitor U6-04 and determine if the ASR is working at its output limit (setting of C5-05). If the ASR is at the output limit, increase C5-05.
Integral operation is enabled in V/f Control with PG (C5-12 = 1) and over/undershoot occurs when changing speed.	-	• Decrease the ASR gain. • Increase the integral time. • Reduce the ASR output limit set in C5-05.
Oscillation at low speed and response is too slow at high speed (or vice versa)	-	• V/f control: Use C5-01/02 and C5-03/04 to set up different ASR settings at minimum and maximum speed. • CLV, AOLV/PM, CLV/PM: Use C5-01, C5-02 and C5-03, C5-04 to define optimal ASR settings for high and low speed. Use C5-07 to define a switching frequency.

■ C5-01, C5-03/C5-02, C5-04: ASR Proportional Gain 1, 2/ASR Integral Time 1, 2

These parameters adjust the responsiveness of the ASR.

Note: C5-01 is automatically set when ASR Tuning is performed (T1-01 = 9 or T2-01 = 9).

No.	Parameter Name	Setting Range	Default
C5-01	ASR Proportional Gain 1	0.00 to 300.00	Determined by A1-02
C5-02	ASR Integral Time 1	0.000 to 10.000 s	Determined by A1-02
C5-03	ASR Proportional Gain 2	0.00 to 300.00	Determined by A1-02
C5-04	ASR Integral Time 2	0.000 to 10.000 s	Determined by A1-02

These parameter settings will function differently depending on the control mode.

V/f Control with PG

Parameters C5-01 and C5-02 determine the ASR characteristics at maximum speed. Parameters C5-03 and C5-04 determine the characteristics at minimum speed.

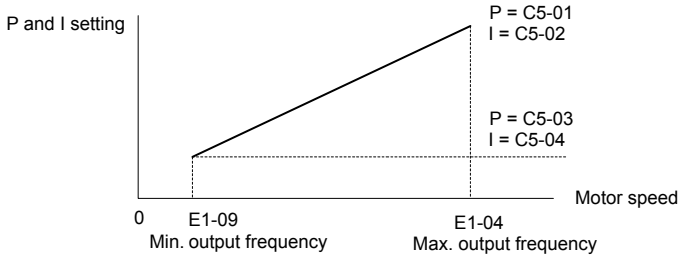

Figure 5.39 ASR Gain and Integral Time in V/f w/PG

CLV, AOLV/PM, and CLV/PM

In these control modes, parameters C5-03 and C5-04 define the ASR gain an integral time at zero speed. The settings in C5-01 and C5-02 are used at speeds above the setting in C5-07. C5-07 is set to 0 as the default so that C5-01 and C5-02 are used over the entire speed range. *Refer to C5-07: ASR Gain Switching Frequency on page 249*.

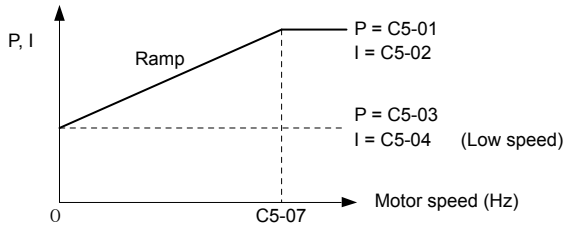

Figure 5.40 Low-speed and High-speed Gain Settings

The gain set in C5-03 can also be activated with a digital input programmed to "ASR gain switch" (H1-□□ = 77). When the terminal is open, the drive uses the ASR gain level set by the pattern in the figure above. When the terminal closes, C5-03 is used. The integral time set to C5-02 is used to change linearly between these settings. The ASR gain switch command from a multi-function input terminal overrides the switching frequency set to C5-07.

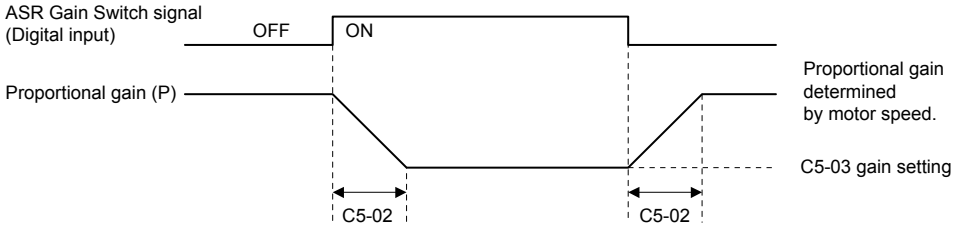

Figure 5.41 ASR Proportional Gain Switch

ASR Gain Tuning (C5-01, C5-03)

The higher this setting, the faster the speed response, although a setting that is too high can lead to oscillation. Increase this setting with larger loads to minimize the speed deviation.

ASR Integral Time Tuning (C5-02, C5-04)

Determines how fast a continuous speed deviation problem is eliminated. A setting that is too long reduces the responsiveness of the speed control. A setting that is too short can cause oscillation.

■ C5-05: ASR Limit

Sets the ASR output limit as a percentage of the maximum output frequency (E1-04). If the motor rated slip is high, the setting might need to be increased to provide proper motor speed control. Use the ASR output monitor U6-04 to determine if ASR is working at the limit set in C5-05. If ASR is working at the limit, make sure the PG pulses (F1-01), PG gear teeth (F1-12, F1-13), and the PG signal are set correctly before making further changes to C5-05.

No.	Parameter Name	Setting Range	Default
C5-05	ASR Limit	0.0 to 20.0%	5.0%

■ C5-06: ASR Primary Delay Time Constant

Sets the filter time constant for the time from the speed loop to the torque command output. Increase this setting gradually in increments of 0.01 for loads with low rigidity or when oscillation is a problem. This parameter rarely needs to be changed.

No.	Parameter Name	Setting Range	Default
C5-06	ASR Primary Delay Time Constant	0.000 to 0.500 s	Determined by A1-02

■ C5-07: ASR Gain Switching Frequency

Sets the frequency where the drive should switch between ASR proportional gain 1 and 2 (C5-01, C5-03) as well as between integral time 1 and 2 (C5-02, C5-04).

No.	Parameter Name	Setting Range	Default
C5-07	ASR Gain Switching Frequency	0.0 to 400.0 Hz <1>	Determined by A1-02 <1>

<1> In AOLV/PM and CLV/PM control modes the setting units and range are expressed as a percent (0.0 to 100.0%) instead of in Hz.

Note: A multi-function input set for the ASR gain switch (H1-□□ = 77) takes priority over the ASR gain switching frequency.

Switching the proportional gain and integral time in the low or high speed range can help stabilize operation and avoid resonance problems. A good switching point is 80% of the frequency where oscillation occurs or at 80% of the target speed. ***Refer to C5-01, C5-03/C5-02, C5-04: ASR Proportional Gain 1, 2/ASR Integral Time 1, 2 on page 248***.

■ C5-08: ASR Integral Limit

Sets the upper limit for ASR as a percentage of the rated load.

No.	Parameter Name	Setting Range	Default
C5-08	ASR Integral Limit	0 to 400%	400%

■ C5-12: Integral Operation during Accel/Decel (V/f w/PG)

Enables integral operation during acceleration and deceleration. Use integral operation when driving a heavy load or a high inertia load (default). Set C5-12 to 1 to use integral operation for low inertia/high performance loads. Enabling integral operation may cause problems with overshoot at the end of acceleration and deceleration. ***Refer to ASR Setup Problems and Corrective Actions on page 247*** to solve such problems.

No.	Parameter Name	Setting Range	Default
C5-12	Integral Operation during Accel/Decel	0, 1	0

Setting 0: Disabled

Integral operation occurs only during constant speed and not during acceleration or deceleration.

Setting 1: Enabled

Integral operation is always enabled.

■ C5-17, C5-18: Motor Inertia, Load Inertia Ratio

C5-17 and C5-18 determine the ratio of the machine inertia to the inertia of the motor being used.

Example: Setting C5-18 to 2.0 reflects a load inertia that is twice the motor inertia.

These parameters are set automatically when Inertia Tuning and ASR Tuning are performed in CLV and CLV/PM control modes. *Refer to Auto-Tuning on page 176* for details on Auto-Tuning or enter the data manually.

No.	Parameter Name	Setting Range	Default
C5-17	Motor Inertia	0.0001 to 600.00 kgm^2	Determined by C6-01, E5-01 and o2-04
C5-18	Load Inertia Ratio	0.0 to 6000.0	1.0

Note: C5–17 is displayed in the following units:
- CIMR-U□4o0011 to 4o0014: 0.0001 kgm2 units
- CIMR-U□2o0028 to 2o0192: 0.0001 kgm2 units
- CIMR-U□2o0248 to 4o0156: 0.01 kgm2 units

■ C5-21, C5-23 / C5-22, C5-24: Motor 2 ASR Proportional Gain 1, 2 / Integral Time 1, 2

These parameters function for motor 2 the same way that C5-01 through C5-04 function for motor 1. *Refer to C5-01, C5-03/ C5-02, C5-04: ASR Proportional Gain 1, 2/ASR Integral Time 1, 2 on page 248* for details.

No.	Parameter Name	Setting Range	Default
C5-21	Motor 2 ASR Proportional Gain 1	0.00 to 300.00	Determined by E3-01
C5-22	Motor 2 ASR Integral Time 1	0.000 to 10.000 s	Determined by E3-01
C5-23	Motor 2 ASR Proportional Gain 2	0.00 to 300.00	Determined by E3-01
C5-24	Motor 2 ASR Integral Time 2	0.000 to 10.000 s	Determined by E3-01

■ C5-25: Motor 2 ASR Limit

Functions for motor 2 the same way that C5-05 functions for motor 1. Sets the ASR output limit for motor 2 as a percentage of the maximum output frequency (E4-04). *Refer to C5-05: ASR Limit on page 249* for details.

No.	Parameter Name	Setting Range	Default
C5-25	Motor 2 ASR Limit	0.0 to 20.0%	5.0%

■ C5-26: Motor 2 ASR Primary Delay Time Constant

Functions for motor 2 the same way that C5-06 functions for motor 1.Sets the filter time constant for the time from the speed loop to the torque command output. *Refer to C5-06: ASR Primary Delay Time Constant on page 249* for details. This parameter rarely needs to be changed.

No.	Parameter Name	Setting Range	Default
C5-26	Motor 2 ASR Primary Delay Time Constant	0.000 to 0.500 s	0.004 s

■ C5-27: Motor 2 ASR Gain Switching Frequency

Functions for motor 2 the same way that C5-07 functions for motor 1. Sets the frequency for motor 2 to change ASR proportional gain 1 and 2 (C5-21, C5-23) as well as the integral time 1 and 2 (C5-22, C5-24). *Refer to C5-01, C5-03/C5-02, C5-04: ASR Proportional Gain 1, 2/ASR Integral Time 1, 2 on page 248* for details.

No.	Parameter Name	Setting Range	Default
C5-27	Motor 2 ASR Gain Switching Frequency	0.0 to 400.0 Hz	0.0 Hz

Note: A multi-function input set for the ASR gain switch (H1-□□ = 77) takes priority over the ASR gain switching frequency.

■ C5-28: Motor 2 ASR Integral Limit

Functions for motor 2 the same way that C5-08 functions for motor 1. Sets the upper limit for ASR as a percentage of the rated load. *Refer to C5-08: ASR Integral Limit on page 249* for details.

No.	Parameter Name	Setting Range	Default
C5-28	Motor 2 ASR Integral Limit	0 to 400%	400%

■ C5-32: Integral Operation during Accel/Decel for Motor 2

Functions for motor 2 the same way that C5-12 functions for motor 1. Enables integral operation during acceleration and deceleration. *Refer to C5-12: Integral Operation during Accel/Decel (V/f w/PG) on page 249* for details.

No.	Parameter Name	Setting Range	Default
C5-32	Integral Operation during Accel/Decel for Motor 2	0, 1	0

Setting 0: Disabled

Integral operation occurs only during constant speed and not during acceleration or deceleration.

Setting 1: Enabled

Integral operation is always enabled.

■ C5-37, C5-38: Motor 2 Inertia, Motor 2 Load Inertia Ratio

These parameters function for motor 2 the same way that C5-17 and C5-18 function for motor 1. These parameters are set automatically when Inertia Tuning and ASR Tuning are performed for motor 2 in CLV and CLV/PM control modes. ***Refer to Auto-Tuning on page 176*** for details on Auto-Tuning or enter the data manually.

No.	Parameter Name	Setting Range	Default
C5-37	Motor 2 Inertia	0.0001 to 600.00 kgm^2	Determined by C6-01 and o2-04
C5-38	Motor 2 Load Inertia Ratio	0.0 to 6000.0	1.0

Note: C5–17 is displayed in the following units:
- CIMR-U□4o0011 to 4o0014: 0.0001 kgm2 units
- CIMR-U□2o0028 to 2o0192: 0.0001 kgm2 units
- CIMR-U□2o0248 to 4o0156: 0.01 kgm2 units

■ C5-39: ASR Primary Delay Time Constant 2

Sets the filter time constant in seconds for the time from the speed loop to the torque reference output when Single Drive KEB Ride-Thru 2 is enabled (L2-29 = 1). Gradually increase this setting in increments of 0.01 s if oscillation occurs during Single Drive KEB Ride-Thru 2.

Note: This parameter is not available in models 4A0930 and 4A1200.

No.	Parameter Name	Setting Range	Default
C5-39	ASR Primary Delay Time Constant 2	0.000 to 0.500 s	0.000 s

◆ C6: Carrier Frequency

■ C6-01: Drive Duty Mode Selection

The drive has two different duty modes from which to select based on the load characteristics. The drive rated current, overload capacity, and maximum output frequency will change depending upon the duty mode selection. Use parameter C6-01 to select Heavy Duty (HD) or Normal Duty (ND) for the application. ***Refer to Heavy Duty and Normal Duty Ratings on page 528*** for details about the rated current.

No.	Parameter Name	Setting Range	Default
C6-01	Duty Mode Selection	0, 1	1 (ND)

Table 5.16 Differences between Heavy Duty and Normal Duty

Characteristics	Heavy Duty Rating (HD)	Normal Duty Rating (ND)
C6-01	0	1
Performance	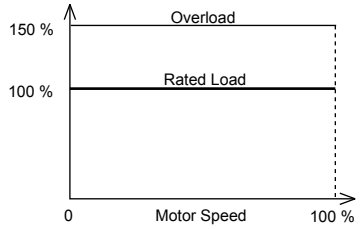	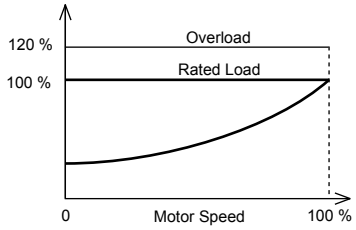
Application	Use Heavy Duty Rating for applications requiring a high overload tolerance with constant load torque, such as extruders and conveyors.	Use Normal Duty Rating for applications in which the torque requirements drop along with the speed, such as fans and pumps where a high overload tolerance is not required.
Overload capability (oL2)	150% of drive rated Heavy Duty current for 60 s	120% of drive rated Normal Duty current for 60 s

Characteristics	Heavy Duty Rating (HD)	Normal Duty Rating (ND)
Stall Prevention during Acceleration (L3-02)	150%	120%
Stall Prevention during Run (L3-06)	150%	120%
Default Carrier Frequency	2 kHz	2 kHz Swing PWM

Note: Changing the Duty Mode selection automatically changes the maximum size motor that the drive can run, sets the E2-□□ parameters to appropriate values (E4-□□ for motor 2), and recalculates parameter settings determined by motor capacity (e.g., b8-04, L2-03, n5-02, L3-24, C5-17, and C5-37).

■ C6-02: Carrier Frequency Selection

Sets the switching frequency of the drive output transistors. Changes to the switching frequency lower audible noise and reduce leakage current.

Note: 1. Increasing the carrier frequency above the default value automatically lowers the drive current rating. *Refer to Rated Current Depending on Carrier Frequency on page 545*.
2. When using a PM motor, the default carrier frequency is 5.0 kHz. The default is 2 kHz when the drive is set for Heavy Duty performance, and "Swing PWM1" when set for Normal Duty performance.

No.	Parameter Name	Setting Range	Default
C6-02	Carrier Frequency Selection	Determined by A1-02 and o2-04	Determined by A1-02, o2-04. Reset when C6-01 is changed.

Settings:

C6-02	Carrier Frequency	C6-02	Carrier Frequency	C6-02	Carrier Frequency
1	2.0 kHz	5	12.5 kHz (10.0 kHz)	9	Swing PWM 3
2	5.0 kHz (4.0 kHz)	6	15.0 kHz (12.0 kHz)	A	Swing PWM 4
3	8.0 kHz (6.0 kHz)	7	Swing PWM 1	F	User defined (C6-03 to C6-05)
4	10.0 kHz (8.0 kHz)	8	Swing PWM 2		

Note: 1. Swing PWM uses a carrier frequency of 2.0 kHz as a base, then applies a special PWM pattern to reduce the audible noise.
2. The value in parenthesis indicates the carrier frequency for AOLV/PM.

Guidelines for Carrier Frequency Parameter Setup

Symptom	Remedy
Speed and torque are unstable at low speeds	Lower the carrier frequency.
Noise from the drive affects peripheral devices	
Excessive leakage current from the drive	
Wiring between the drive and motor is too long <1>	
Audible motor noise is too loud	Increase the carrier frequency or use Swing PWM. <2>

<1> The carrier frequency may need to be lowered if the motor cable is too long. Refer to *Table 5.17*.

<2> The default carrier frequency in ND is Swing PWM (C6-02 = 7), using a 2 kHz base. Increasing the carrier frequency is permissible when the drive is set for Normal Duty, however the drive rated current is reduced when the carrier frequency is increased.

Table 5.17 Wiring Distance and Carrier Frequency

Wiring Distance	Up to 50 m	Up to 100 m	Greater than 100 m
Recommended setting value for C6-02	1 to F (up to 15 kHz)	1 to 2 (up to 5 kHz), 7 (Swing PWM)	1 (up to 2 kHz), 7 (Swing PWM)

Note: The maximum cable length is 100 m when using OLV/PM (A1-02 = 5) or AOLV/PM (A1-02 = 6).

■ C6-03, C6-04, C6-05: Carrier Frequency Upper Limit, Lower Limit, Proportional Gain

These parameters set a user-defined or a variable carrier frequency. Set C6-02 to F to set the upper and lower limits and the carrier frequency proportional gain.

No.	Parameter Name	Setting Range	Default
C6-03	Carrier Frequency Upper Limit	1.0 to 15.0 kHz <1> <2>	Determined by C6-02
C6-04	Carrier Frequency Lower Limit (V/f Control only)	1.0 to 15.0 kHz <1> <2>	
C6-05	Carrier Frequency Proportional Gain (V/f Control only)	0 to 99 <1>	

<1> In AOLV/PM and CLV/PM control modes, the setting units and range are expressed as a percentage (0.0 to 100.0%).

<2> The setting range is 1.0 to 5.0 for models 4A0515 to 4A1200.

Setting a Fixed User Defined Carrier Frequency

A carrier frequency between the fixed selectable values can be entered in parameter C6-03 when C6-02 is set to F.
In V/f Control, adjust parameter C6-04 to the same value as C6-03.

Setting a Variable Carrier Frequency (V/f Control)

In V/f Control, the carrier frequency can be set up to change linearly with the output frequency by setting the upper and lower limits for the carrier frequency and the carrier frequency proportional gain (C6-03, C6-04, C6-05) as shown in *Figure 5.42*.

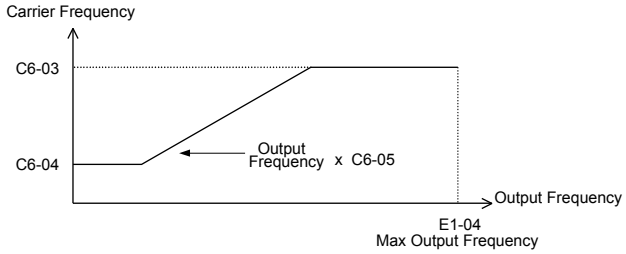

Figure 5.42 Carrier Frequency Changes Relative to Output Frequency

Note: When C6-05 is set lower than 7, C6-04 is disabled and the carrier frequency will be fixed to the value set in C6-03.

■ C6-09: Carrier Frequency during Rotational Auto-Tuning

Determines the carrier frequency while performing Rotational Auto-Tuning. Although this parameter rarely needs to be changed, when overcurrent problems occur when Auto-Tuning a high frequency motor or low impedance motor, it may be helpful to set C6-03 to a high value before setting C6-09 to 1.

Note: This parameter is not available in models 4A0930 and 4A1200.

No.	Parameter Name	Setting Range	Default
C6-09	Carrier Frequency during Rotational Auto-Tuning	0, 1	0

Setting 0: Carrier frequency = 5 kHz

Note: In PM control modes, this value is 2 kHz.

Setting 1: Same value set to C6-03

Note: In PM control modes, this value is the carrier frequency set in C6-02.

5.4 d: Reference Settings

The figure below gives an overview of the reference input, selections, and priorities.

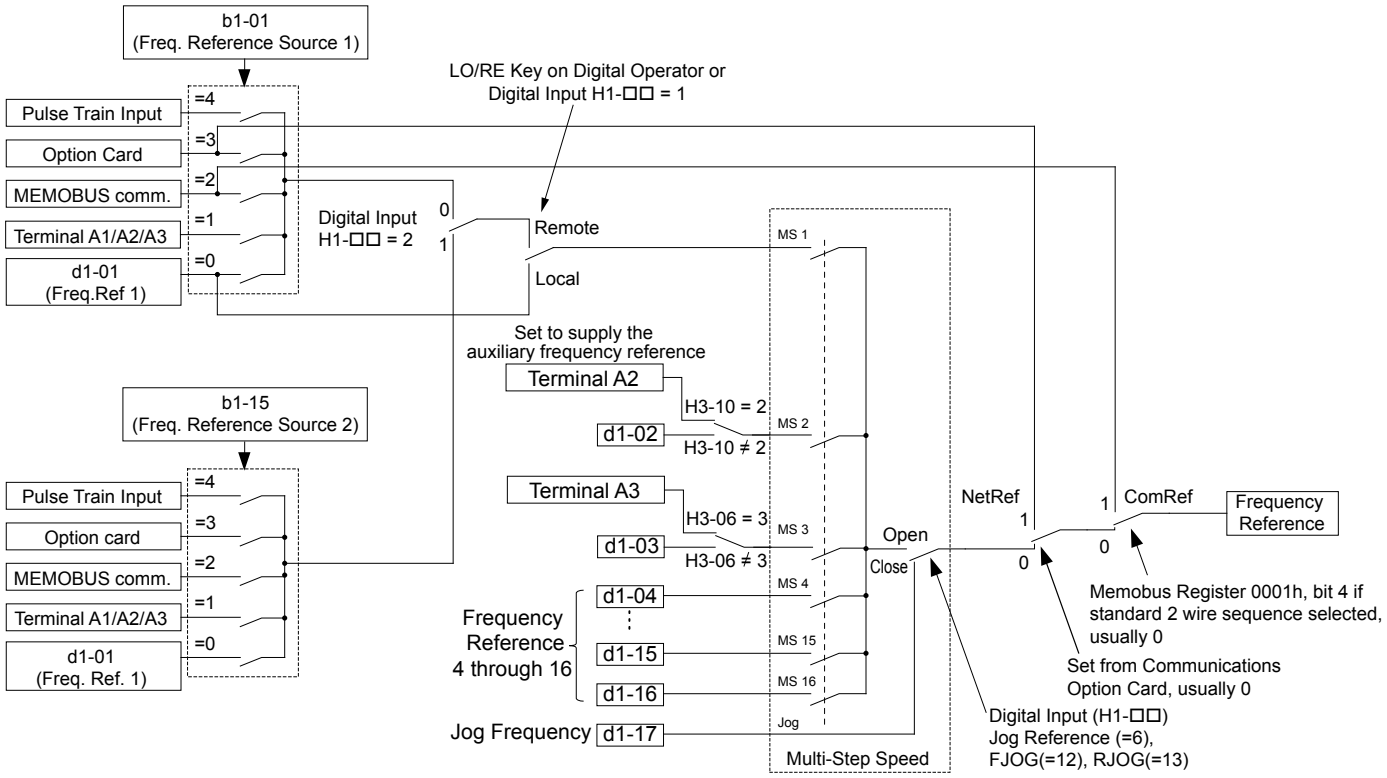

Figure 5.43 Frequency Reference Setting Hierarchy

◆ d1: Frequency Reference

■ d1-01 to d1-17: Frequency Reference 1 to 16 and Jog Frequency Reference

The drive lets the user switch between up to 17 preset frequency references during run (including the Jog reference) through the digital input terminals. The drive uses the acceleration and deceleration times that have been selected when switching between each frequency reference.

The Jog frequency overrides all other frequency references and must be selected by a separate digital input.

The multi-speed references 1, 2, and 3 can be provided by analog inputs.

No.	Parameter Name	Setting Range	Default
d1-01 to d1-16	Frequency Reference 1 to 16	0.00 to 400.00 Hz <1> <2>	0.00 Hz <2>
d1-17	Jog Frequency Reference	0.00 to 400.00 Hz <1> <2>	6.00 Hz <2>

<1> The upper limit is determined by the maximum output frequency (E1-04) and upper limit for the frequency reference (d2-01).

<2> Setting units are determined by parameter o1-03. The default is “Hz” (o1-03 = 0) in V/f, V/f w/PG, OLV, CLV, and OLV/PM control modes. The default for AOLV/PM and CLV/PM control modes expresses the frequency reference as a percentage (o1-03 = 1).

Multi-Step Speed Selection

To use several speed references for a multi-step speed sequence, set the H1-□□ parameters to 3, 4, 5, and 32. To assign the Jog reference to a digital input, set H1-□□ to 6.

Notes on using analog inputs as Multi-Speed 1, 2, and 3:

- **Multi-Step Speed 1**

  Set b1-01 to 1 to set terminal A1 analog input to Multi-Step Speed 1.

  Set b1-01 to 0 when setting d1-01, Frequency Reference 1, to Multi-Step Speed 1.
- **Multi-Step Speed 2**

  Set H3-06, Terminal A3 Function Selection, to 2 (Auxiliary Frequency Reference 1) when setting terminal A3 analog input to Multi-Step Speed 2.

  Set H3-06 to F (Through mode) when setting d1-02, Frequency Reference 2, to Multi-Step Speed 2.
- **Multi-Step Speed 3**

  Set H3-10, Terminal A2 Function Selection, to 3 (Auxiliary Frequency Reference 2) when setting terminal A2 analog input to Multi-Step Speed 3.

  Set H3-10 to F (Through mode) when setting d1-03, Frequency Reference 3, to Multi-Step Speed 3.

  Set H3-09 to 0 and set DIP switch S1 on the control circuit terminal board to V (voltage) when inputting 0 to 10 V to terminal A2 analog input.

Select the different speed references as shown in *Table 5.18*. *Figure 5.44* illustrates the multi-step speed selection.

Table 5.18 Multi-Step Speed Reference and Terminal Switch Combinations

Reference	Multi-Step Speed Reference H1-□□ = 3	Multi-Step Speed Reference 2 H1-□□ = 4	Multi-Step Speed Reference 3 H1-□□ = 5	Multi-Step Speed Reference 4 H1-□□ = 32	Jog Reference Selection H1-□□ = 6
Frequency Reference 1 (set in b1-01)	OFF	OFF	OFF	OFF	OFF
Frequency Reference 2 (d1-02 or input terminal A1, A2, A3)	ON	OFF	OFF	OFF	OFF
Frequency Reference 3 (d1-03 or input terminal A1, A2, A3)	OFF	ON	OFF	OFF	OFF
Frequency Reference 4 (d1-04)	ON	ON	OFF	OFF	OFF
Frequency Reference 5 (d1-05)	OFF	OFF	ON	OFF	OFF
Frequency Reference 6 (d1-06)	ON	OFF	ON	OFF	OFF
Frequency Reference 7 (d1-07)	OFF	ON	ON	OFF	OFF
Frequency Reference 8 (d1-08)	ON	ON	ON	OFF	OFF
Frequency Reference 9 (d1-09)	OFF	OFF	OFF	ON	OFF
Frequency Reference 10 (d1-10)	ON	OFF	OFF	ON	OFF
Frequency Reference 11 (d1-11)	OFF	ON	OFF	ON	OFF
Frequency Reference 12 (d1-12)	ON	ON	OFF	ON	OFF
Frequency Reference 13 (d1-13)	OFF	OFF	ON	ON	OFF
Frequency Reference 14 (d1-14)	ON	OFF	ON	ON	OFF
Frequency Reference 15 (d1-15)	OFF	ON	ON	ON	OFF
Frequency Reference 16 (d1-16)	ON	ON	ON	ON	OFF
Jog Frequency Reference (d1-17) <1>	–	–	–	–	ON

<1> The Jog frequency overrides all other frequency references.

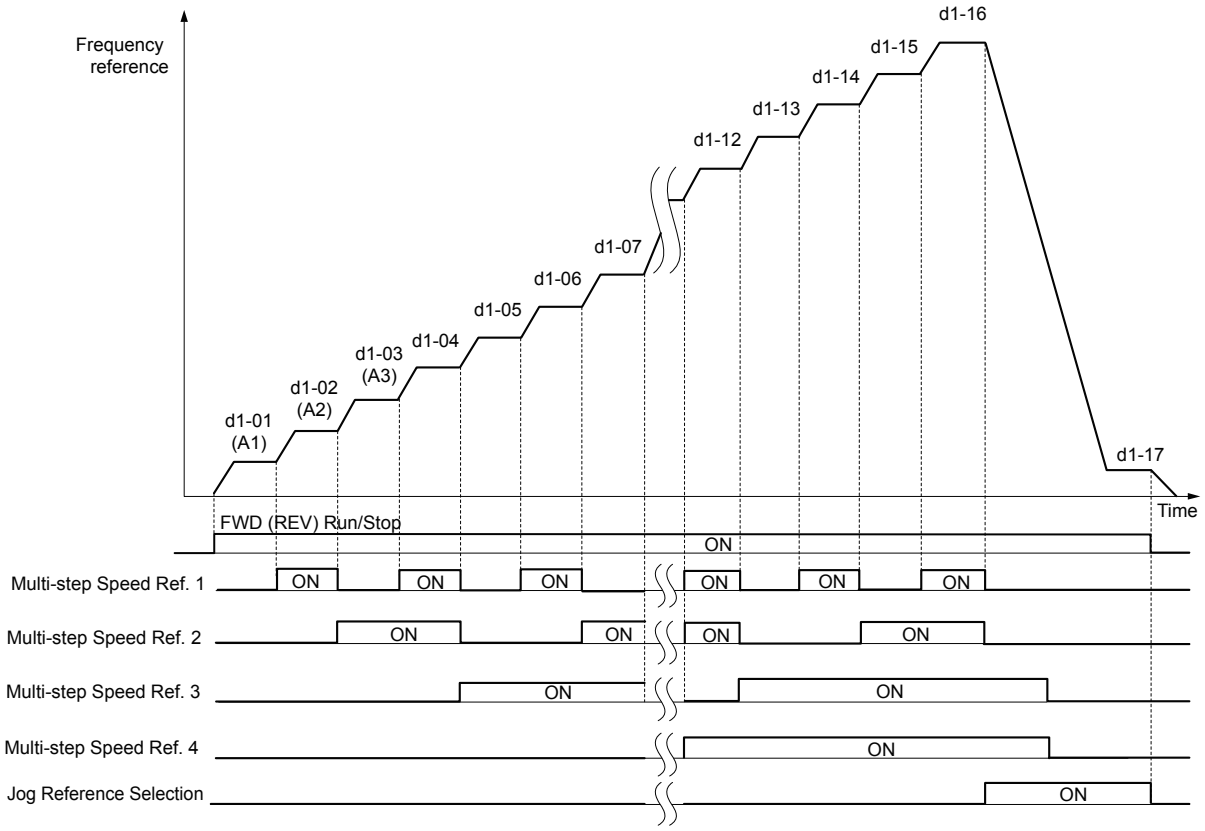

Figure 5.44 Preset Reference Timing Diagram

◆ d2: Frequency Upper/Lower Limits

Upper and lower frequency limits prevent motor speed from going above or below levels that may cause resonance or equipment damage.

■ d2-01: Frequency Reference Upper Limit

Sets the maximum frequency reference as a percentage of the maximum output frequency. This limit applies to all frequency references.

Even if the frequency reference is set to a higher value, the drive internal frequency reference will not exceed this value.

No.	Parameter Name	Setting Range	Default
d2-01	Frequency Reference Upper Limit	0.0 to 110.0%	100.0%

■ d2-02: Frequency Reference Lower Limit

Sets the minimum frequency reference as a percentage of the maximum output frequency. This limit applies to all frequency references.

If a lower reference than this value is entered, the drive will run at the limit set to d2-02. If the drive is started with a lower reference than d2-02, it will accelerate up to d2-02.

No.	Parameter Name	Setting Range	Default
d2-02	Frequency Reference Lower Limit	0.0 to 110.0%	0.0%

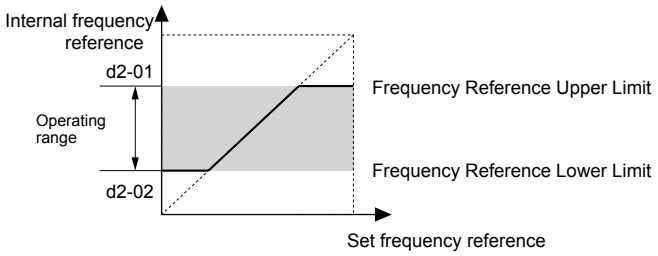

Figure 5.45 Frequency Reference: Upper and Lower Limits

■ d2-03: Master Speed Reference Lower Limit

Sets a lower limit as a percentage of the maximum output frequency that will only affect a frequency reference entered from the analog input terminals (A1, A2, or A3) as the master speed reference. This is unlike parameter d2-02, which affects all frequency references regardless of their source.

Note: When lower limits are set to both parameters d2-02 and d2-03, the drive uses the greater of those two values as the lower limit.

No.	Parameter Name	Setting Range	Default
d2-03	Master Speed Reference Lower Limit	0.0 to 110.0%	0.0%

◆ d3: Jump Frequency

■ d3-01 to d3-04: Jump Frequencies 1, 2, 3 and Jump Frequency Width

The Jump frequencies are frequency ranges at which the drive will not operate. The drive can be programmed with three separate Jump frequencies to avoid operating at speeds that cause resonance in driven machinery. If the speed reference falls within a Jump Frequency dead band, the drive will clamp the frequency reference just below the dead band and only accelerate past it when the frequency reference rises above the upper end of the dead band.

Setting parameters d3-01 through d3-03 to 0.0 Hz disables the Jump Frequency function.

No.	Parameter Name	Setting Range	Default
d3-01	Jump Frequency 1	0.0 to 400.0 Hz <1>	0.0 Hz <1>
d3-02	Jump Frequency 2	0.0 to 400.0 Hz <1>	0.0 Hz <1>
d3-03	Jump Frequency 3	0.0 to 400.0 Hz <1>	0.0 Hz <1>
d3-04	Jump Frequency Width	0.0 to 20.0 Hz <2>	1.0 Hz <2>

<1> In AOLV/PM and CLV/PM control modes, the setting units and range are expressed as a percentage instead of in Hz.

<2> In AOLV/PM and CLV/PM control modes, the setting units and range are expressed as a percent instead of in Hz. The setting range is 0.0 to 40.0% and the default is 1.0%.

Figure 5.46 shows the relationship between the Jump Frequency and the frequency reference.

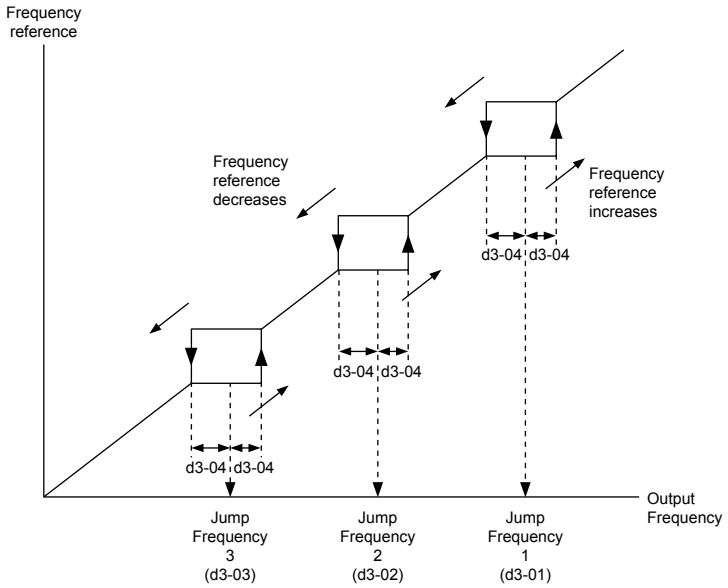

Figure 5.46 Jump Frequency Operation

Note: 1. The drive will use the active accel/decel time to pass through the specified dead band range, but will not allow continuous operation in that range.
2. When setting more than one Jump Frequency, make sure that the parameters do not overlap.

◆ d4: Frequency Reference Hold and Up/Down 2 Function

■ d4-01: Frequency Reference Hold Function Selection

Determines whether the frequency reference or the frequency bias (Up/Down 2) value is saved when the Stop command is entered or the power supply is shut down. This parameter is effective when either of the digital input functions listed below are used:

- Accel/decel ramp hold function (H1-□□= A)
- Up/Down function (H1-□□ = 10 and 11)
- Up/Down 2 function (H1-□□ = 75 and 76)

No.	Parameter Name	Setting Range	Default
d4-01	Frequency Reference Hold Function Selection	0, 1	0

The operation depends on the function used with parameter d4-01.

Setting 0: Disabled

- Acceleration hold

  The hold value will be reset to 0 Hz when the Stop command is entered or the drive power is switched off. The active frequency reference will be the value the drive uses when it restarts.
- Up/Down

  The frequency reference value will be reset to 0 Hz when the Stop command is entered or the drive power is switched off. The drive will start from 0 Hz when it is restarted.
- Up/Down 2

  The frequency bias is not saved when the Stop command is entered, or 5 s after the Up/Down 2 command has been released. The Up/Down 2 function will start with a bias of 0% when the drive is restarted.

Setting 1: Enabled

- Acceleration hold

  The last hold value will be saved when the Run command or the drive power is switched off and the drive will use the saved value as the frequency reference when it restarts. Make sure to continuously enable the multi-function input terminal set for "Accel/decel ramp hold" (H1-□□ = A) or the hold value will be cleared when the power is switched on.

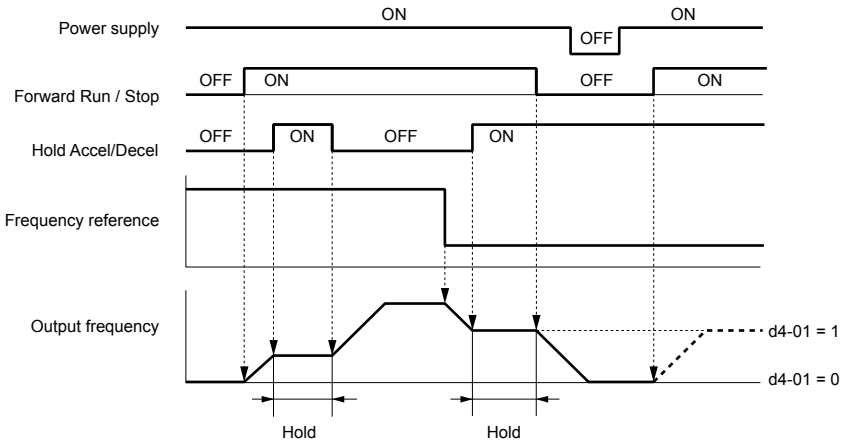

Figure 5.47 Frequency Reference Hold with Accel/Decel Hold Function

- Up/Down

  The frequency reference value will be saved when the Run command or the drive power is switched off. The drive will use the frequency reference that was saved when it restarts.
- Up/Down 2 with frequency reference from digital operator

  When a Run command is active and the Up/Down 2 command is released for longer than 5 s, the Up/Down 2 bias value is added to the frequency reference and then reset to 0. This new frequency reference is saved and will also be used to restart the drive after the power is cycled.

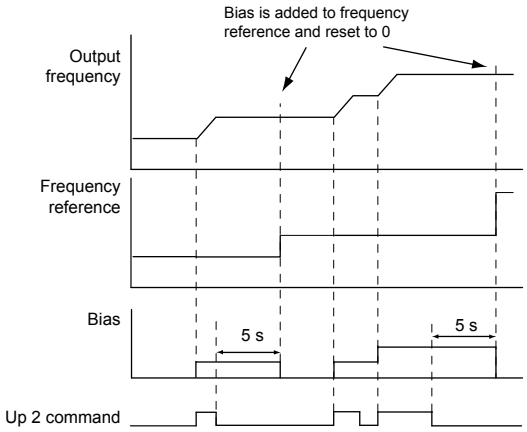

Figure 5.48 Up/Down 2 Example with Reference from Digital Operator and d4-01 = 1

- Up/Down 2 with frequency reference from input sources other than the digital operator

  When a Run command is active and the Up/Down 2 command is released for longer than 5 s, the bias value will be saved in parameter d4-06. When restarting after the power is switched off, the drive will add the value saved in d4-06 as a bias to the frequency reference.

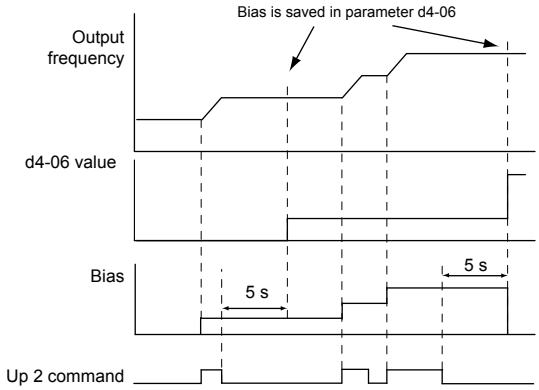

Figure 5.49 Up/Down 2 Example with Other Reference than Digital Operator and d4-01 = 1

Note: Set the limits for Up/Down 2 properly when using d4-01 = 1 in combination with the Up/Down 2 function. *Refer to d4-08: Frequency Reference Bias Upper Limit (Up/Down 2) on page 263* and *Refer to d4-09: Frequency Reference Bias Lower Limit (Up/Down 2) on page 263* for details on the limit settings.

Clearing the Saved Value

Depending on which function is used, it is possible to clear the saved frequency reference value by:

- Releasing the input programmed for Acceleration hold.
- Setting an Up or Down command while no Run command is active.
- Resetting parameter d4-06 to zero. *Refer to d4-06: Frequency Reference Bias (Up/Down 2) on page 262* for details.

■ d4-03: Frequency Reference Bias Step (Up/Down 2)

Sets the bias added to or subtracted from the frequency reference by the Up/Down 2 function.

No.	Parameter Name	Setting Range	Default
d4-03	Frequency Reference Bias Step (Up/Down 2)	0.00 to 99.99 Hz	0.00 Hz

The operation depends on the set value:

Setting d4-03 = 0.00 Hz

While the Up 2 or Down 2 command is enabled, the bias value is increased or decreased using the accel/decel times determined by parameter d4-04.

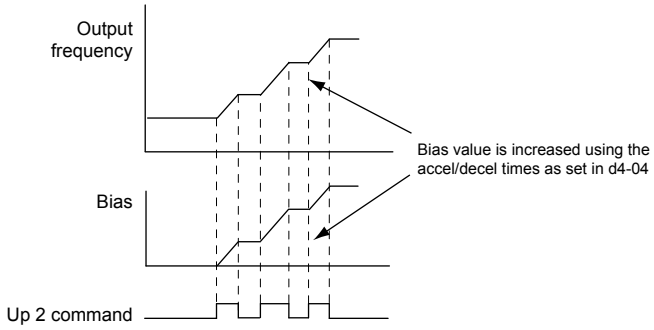

Figure 5.50 Up/Down 2 Bias when d4-03 = 0.00 Hz

Setting d4-03 ≠ 0.00 Hz

When an Up 2 or Down 2 command is enabled, the bias is increased or decreased in steps for the value set in d4-03. The frequency reference changes with the accel/decel times determined by parameter d4-04.

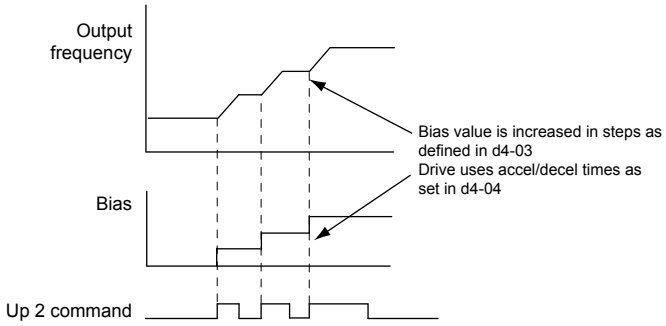

Figure 5.51 Up/Down 2 Bias when d4-03 ≠ 0.00 Hz

■ d4-04: Frequency Reference Bias Accel/Decel (Up/Down 2)

Determines the accel/decel times used to increase or decrease the frequency reference or bias when using the Up/Down 2 function.

No.	Parameter Name	Setting Range	Default
d4-04	Frequency Reference Bias Accel/Decel (Up/Down 2)	0, 1	0

Setting 0: Current Accel/Decel Time

The drive uses the currently active accel/decel time.

Setting 1: Accel/Decel Time 4

The drive uses accel/decel time 4 set to parameters C1-07 and C1-08.

■ d4-05: Frequency Reference Bias Operation Mode Selection (Up/Down 2)

Determines if the bias value is held when the Up/Down 2 inputs are both released or both enabled. The parameter is effective only when parameter d4-03 is set to 0.00.

No.	Parameter Name	Setting Range	Default
d4-05	Frequency Reference Bias Operation Mode Selection (Up/Down 2)	0, 1	0

Setting 0: Hold Bias Value

The bias value will be held if no input Up 2 or Down 2 is active.

Setting 1: Reset Bias Value

The bias is reset to 0% when inputs Up 2 and Down 2 are both on or both off. The drive will use the accel/decel time as selected in d4-04 to accelerate or decelerate to the frequency reference value.

■ d4-06: Frequency Reference Bias (Up/Down 2)

Saves the frequency reference bias value set by the Up/Down 2 function as a percentage of the maximum output frequency. The function of this parameter depends on the Up/Down 2 function configuration. This parameter is not normally used when the digital operator sets the frequency reference.

- The value set to d4-06 will be applied during run, however the value is reset when the frequency reference changes (including multi-step references) and is disabled when d4-01 = 0 and the Run command is removed.
- When d4-01 = 0 and the frequency reference is set by a source other than the digital operator, the value set in d4-06 is added to or subtracted from the frequency reference.
- When d4-01 = 1 and the frequency reference is set by a source other than the digital operator, the bias value adjusted with the Up/Down 2 inputs is stored in d4-06 when 5 s have passed after releasing the Up 2 or Down 2 command. The frequency reference will return to the value without the Up/Down 2 command.

No.	Parameter Name	Setting Range	Default
d4-06	Frequency Reference Bias (Up/Down 2)	-99.9 to 100.0%	0.0%

Conditions that Reset or Disable d4-06

- The Up/Down 2 function has not been assigned to the multi-function terminals.
- The frequency reference source has been changed (including LOCAL/REMOTE or External reference 1/2 switch over by digital inputs).

- d4-03 = 0.00 Hz, d4-05 = 1, and the Up/Down 2 commands are both open or both closed.
- Any changes to the maximum frequency set to E1-04.

■ d4-07: Analog Frequency Reference Fluctuation Limit (Up/Down 2)

Handles frequency reference changes while the Up 2 or Down 2 terminal is enabled. If the frequency reference changes for more than the level set to d4-07, then the bias value will be held,and the drive will accelerate or decelerate following the frequency reference. When the frequency reference is reached, the bias hold is released and the bias follows the Up/Down 2 input commands.

This parameter is applicable only if the frequency reference is set by an analog or pulse input.

No.	Parameter Name	Setting Range	Default
d4-07	Analog Frequency Reference Fluctuation Limit (Up/Down 2)	0.1 to 100.0%	1.0%

■ d4-08: Frequency Reference Bias Upper Limit (Up/Down 2)

Sets the upper limit of the Up/Down 2 bias (monitor U6-20) and the value that can be saved in parameter d4-06. Set this parameter to an appropriate value before using the Up/Down 2 function.

Note: When the frequency reference is set by the digital operator (b1-01 = 0) and d4-01 = 1, the bias value will be added to the frequency reference if no Up/Down 2 command is received for 5 s, and will be reset to 0 afterwards. From that point, the bias can be increased up to the limit set in d4-08 again.

No.	Parameter Name	Setting Range	Default
d4-08	Frequency Reference Bias Upper Limit (Up/Down 2)	0.0 to 100.0%	100.0%

■ d4-09: Frequency Reference Bias Lower Limit (Up/Down 2)

Sets the lower limit of the Up/Down 2 bias (monitor U6-20) and the value that can be saved in parameter d4-06. Set this parameter to an appropriate value before using the Up/Down 2 function.

Note: When the frequency reference is set by the digital operator (b1-01 = 0) and d4-01 = 1, the bias value will be added to the frequency reference if no Up/Down 2 command is received for 5 s, and will be reset to 0 afterwards. If the bias is increased using the Up 2 command, it cannot be reduced with a Down 2 command when the limit set in d4-09 is 0. Set a negative lower limit in d4-09 to allow speed reduction in this situation.

No.	Parameter Name	Setting Range	Default
d4-09	Frequency Reference Bias Lower Limit (Up/Down 2)	-99.9 to 0.0%	0.0%

■ d4-10: Up/Down Frequency Reference Limit Selection

Selects how the lower frequency limit is set when using the Up/Down function. ***Refer to Setting 10, 11: Up/Down Function on page 301*** for details on the Up/Down function in combination with frequency reference limits.

No.	Parameter Name	Setting Range	Default
d4-10	Up/Down Frequency Reference Limit Selection	0, 1	0

Setting 0: Lower Limit is Determined by d2-02 or Analog Input

The higher value between d2-02 and an analog input programmed for Frequency bias (A1, A2, A3) determines the lower frequency reference limit.

Note: When using the External Reference 1/2 (H1-□□ = 2) to switch between the Up/Down function and an analog input as the reference source, the analog value becomes the lower reference limit when the Up/Down command is active. Set d4-10 to 1 to make the Up/Down function independent of the analog input value.

Setting 1: Lower Limit is Determined by d2-02

Only parameter d2-02 sets the lower frequency reference limit.

◆ d5: Torque Control

Torque Control defines a setpoint for the motor torque and is available for CLV and CLV/PM (A1-02 = 3, 7).

■ Torque Control Operation

Torque control can be enabled either by setting parameter d5-01 to 1 or by setting digital input (H1-□□ = 71). *Figure 5.52* illustrates the working principle.

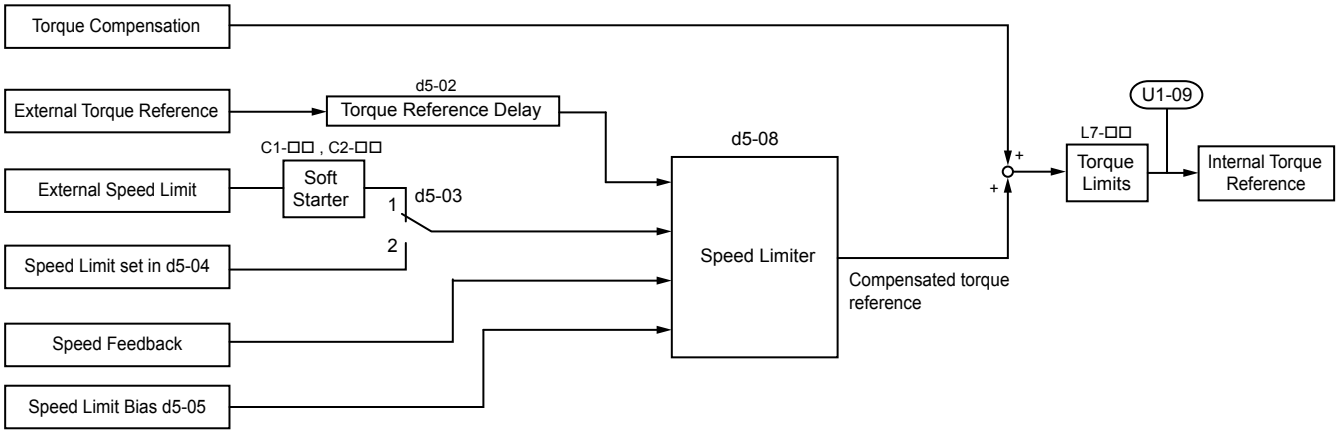

Figure 5.52 Torque Control Block Diagram

The externally input torque reference is the target value for the motor output torque. If the motor torque reference and the load torque are not in balance when in Torque Control, the motor accelerates or decelerates. To prevent operation beyond the speed limit, compensate the external torque reference value if the motor speed reaches the limit. The compensation value is calculated using the speed limit, speed feedback, and the speed limit bias.

If an external torque compensation value is input, it is added to the speed limit compensated torque reference value. The value calculated is limited by the L7-□□ settings, and is then used as the internal torque reference, which can be monitored in U1-09. The L7-□□ settings have highest priority. The motor cannot be operated with a higher torque than the L7-□□ settings even if the external torque reference value is increased.

■ Setting the Torque Reference, Speed Limit, and Torque Compensation Values

Torque Control Reference Sources

Set input values for Torque Control as explained in *Table 5.19*.

Table 5.19 Torque Control Input Value Selection

Input Value	Signal Source	Settings	Remarks
Torque Reference	Analog inputs A1/A2/A3	H3-02, H3-10, or H3-06 = 13 <I>	Match the input terminal signal level settings to the signal being used. *Refer to H3: Multi-Function Analog Inputs on page 320* for details on adjusting analog input signals.
	Analog Option	• F2-01 = 0 • H3-02, H3-10, or H3-06 = 13 <I>	The F3-□□ settings become effective for the option board input terminals. Match the input terminal signal level settings to the signal being used. *Refer to H3: Multi-Function Analog Inputs on page 320* for details on adjusting analog input signals.
Torque Reference	MEMOBUS Register 0004H	• b1-01 = 2 • Set Register 000FH, Bit 2 = 1 to enable Torque reference from register 0004H	–
	Communications Option	• b1-01 = 3 • F6-06 = 1 Refer to the option card manual for details about setting the torque compensation value.	–

Input Value	Signal Source	Settings	Remarks
Speed Limit	Signal selected as frequency reference source	d5-03 = 1 The speed limit is taken from the input selected as frequency reference source in parameter b1-01 or b1-15. <1>	The settings in C1-□□ for accel/decel times and in C2-□□ for S-curves are applied to the speed limit value.
	Parameter d5-04	d5-03 = 2	–
Torque Compensation	Analog inputs A1/A2/A3	H3-02, H3-10, or H3-06 = 14 <1>	Match the input terminal signal level settings to the signal being used. ***Refer to H3: Multi-Function Analog Inputs on page 320*** for details on adjusting analog input signals.
	Analog Option	• F2-01 = 0 • H3-02, H3-10, or H3-06 = 14 <1>	The H3-□□ settings become effective for the option board input terminals. Match the input terminal signal level settings to the signal being used.
	MEMOBUS Register 0005H	• b1-01 = 2 • Set Register 000FH, bit 3 = 1 to enable the torque compensation setting by register 0005H	–
	Communications Option	b1-01 = 3 Refer to the option card manual for details about setting the torque compensation value.	–

<1> Sets analog input terminals A1, A2, and A3 to supply the speed limit, torque reference, or torque compensation. Setting two analog inputs for the same function will trigger an oPE07 error (Multi-Function Analog Input Selection Error).

Input Value Polarity

The direction of the input values described above depends on the polarity of the Run command and the input value.

Table 5.20 Torque Control Signal Polarity

Run Command Direction	Input Value Polarity	Input Value Direction
Forward	+ (positive)	Forward direction
	- (negative)	Reverse direction
Reverse	+ (positive)	Reverse direction
	- (negative)	Forward direction

Example:

- With a Forward run command and a positive torque reference signal the internal torque reference will be positive, i.e., in the forward direction.
- With a Forward run command and a negative torque reference signal the internal torque reference will be negative, i.e., in the reverse direction.

When using analog inputs, negative input values can be generated by:

- applying negative voltage input signals.
- using positive analog input signals while setting the analog input bias to negative values so the input value can be negative.
- applying positive voltage input signals and using a digital input that is programmed for H1- □□ = 78.

When using MEMOBUS/Modbus communication or a communication option card, only positive input values can be set.

Independent of its input source, the polarity of the torque reference signal can be inverted using a digital input that is programmed for H1-□□ = 78. Use this function to input negative torque reference values when using MEMOBUS/Modbus or a communication option card.

■ Speed Limitation and Speed Limit Bias

The speed limit setting is read from the input selected in parameter d5-03. A bias can be added to this speed limit using parameter d5-05 while parameter d5-08 determines how the speed limit bias is applied. ***Table 5.21*** explains the relation between these settings.

Table 5.21 Speed Limit, Speed Bias and Speed Limit Priority Selection

	Operating Conditions							
Run Command	Forward	Reverse	Forward	Reverse	Forward	Reverse	Forward	Reverse
Torque Reference Direction	Positive (Forward)	Reverse Positive (Forward)	Negative (Reverse)	Negative (Reverse)	Negative (Reverse)	Negative (Reverse)	Positive (Forward)	Positive (Forward)
Speed Limit Direction	Positive (Forward)	Negative (Reverse)	Negative (Reverse)	Positive (Forward)	Positive (Forward)	Negative (Reverse)	Negative (Reverse)	Positive (Forward)
Motor Rotation Direction	Forward		Reverse		Forward		Reverse	
Bidirectional Speed Limit Bias (d5-08 = 0) <1>	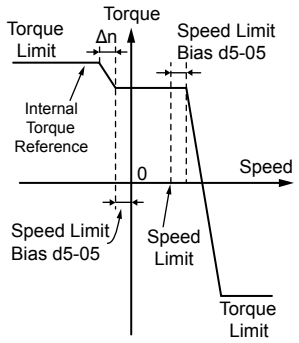		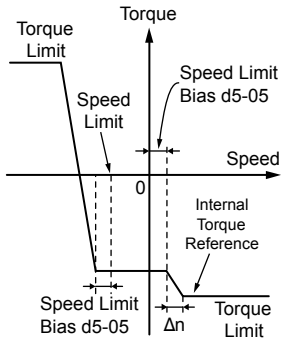		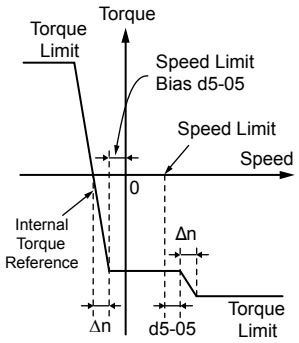		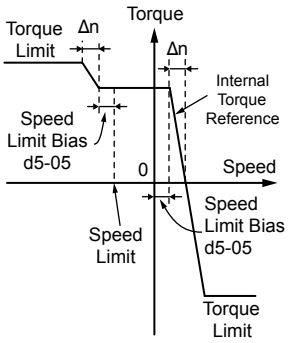	
Unidirectional Speed Limit Bias (d5-08 = 1) <1>	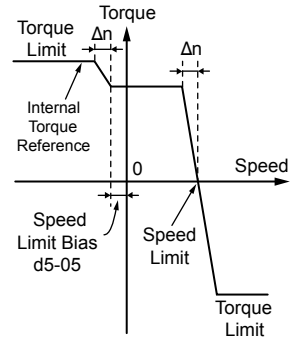		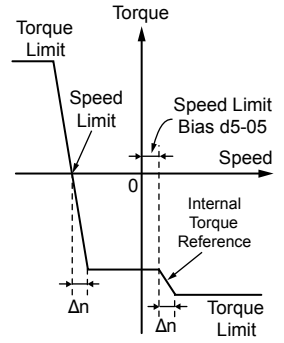		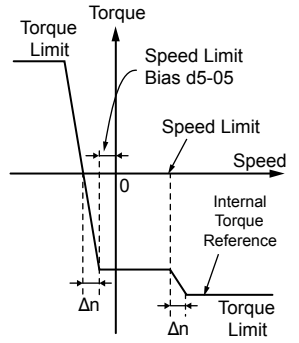		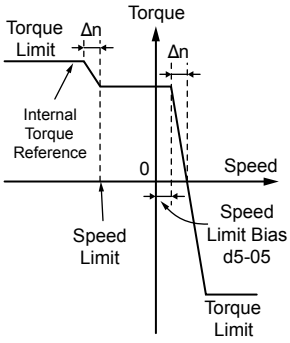	
Application Example	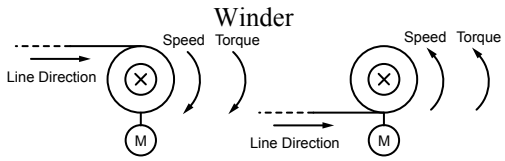				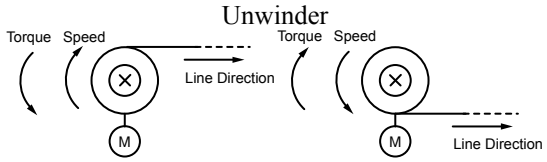			

<1> The value of delta n in the drawings depends on the ASR setting in parameters C5-□□.

■ Indicating Operation at the Speed Limit

Program a digital output to close when the drive operates at or beyond the speed limit (H2-□□ = 32). Use this output to notify a control device such as a PLC of abnormal operating conditions.

■ Switching Between Torque and Speed Control

Use a digital input to switch Torque Control and Speed Control (H1-□□ = 71). When switching from Speed Control to Torque Control, the torque limit becomes the torque reference and the speed reference becomes the speed limit. This change is reversed when switching back to Speed Control.

If required by the application, set up a delay time using parameter d5-06. The reference values (torque reference/speed limit in Torque Control or speed reference/torque limit in Speed Control) are held during this switch delay time. Change the reference values from the controller within this delay time.

Note:
1. The switching delay time d5-06 is not applied when the Stop command is entered. Here the operation switches immediately to speed control and the drive decelerates to stop at the torque limit.
2. Set d5-01 to 0 when switching between Torque Control and Speed Control. An oPE15 (Torque Control Setting Error) alarm will be triggered if parameter d5-01 is set to 1 while H1-□□ is set to 71 at the same time.

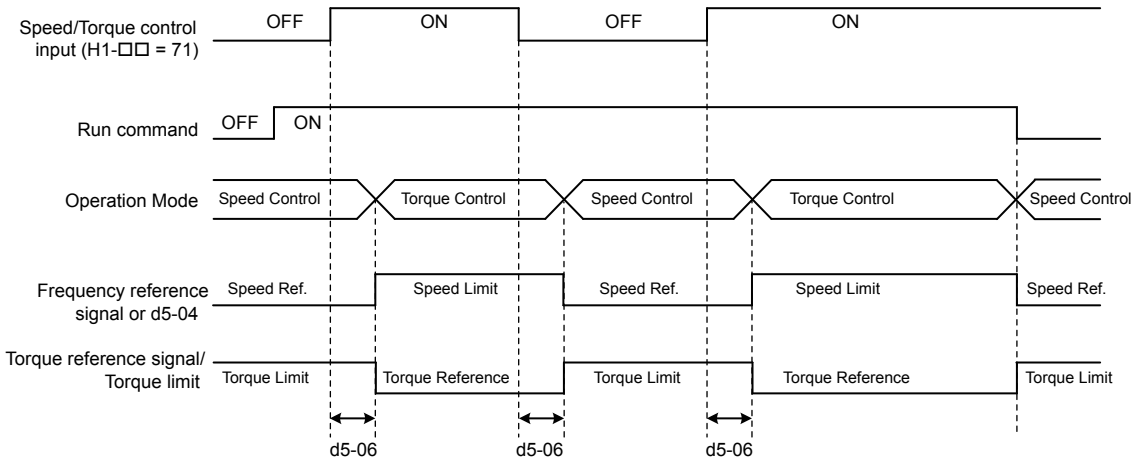

Figure 5.53 Speed/Torque Control Switching Time

■ d5-01: Torque Control Selection

No.	Parameter Name	Setting Range	Default
d5-01	Torque Control Selection	0, 1	0

Setting 0: Disabled

Speed Control will be active. Also use this setting when H1-□□ = 71 (Speed/Torque Control Switch).

Setting 1: Enabled

Torque Control is always enabled.

■ d5-02: Torque Reference Delay Time

Apply a filter with the time constant set to parameter d5-02 to the torque reference signal to eliminate oscillation resulting from an unstable torque reference signal. A higher filter time stabilizes control while reducing the responsiveness.

No.	Parameter Name	Setting Range	Default
d5-02	Torque Reference Delay Time	0 to 1000 ms	0 ms

■ d5-03: Speed Limit Selection

Determines how the speed limit is set.

No.	Parameter Name	Setting Range	Default
d5-03	Speed Limit Selection	1 or 2	1

Setting 1: Frequency Reference Input

The frequency reference value at the active reference source (digital operator, External reference 1 or External reference 2) will be used as speed limit. Note that in this case all settings for accel/decel times (C1-01 to C1-08) and S-curves (C2-01 to C2-04) will apply for the speed limit.

Setting 2: d5-04

The speed limit is set by parameter d5-04.

■ d5-04: Speed Limit

Sets the speed limit during torque control if parameter d5-03 is set to 2. *Refer to Speed Limitation and Speed Limit Bias on page 265*.

No.	Parameter Name	Setting Range	Default
d5-04	Speed Limit	-120 to 120%	0%

■ d5-05: Speed Limit Bias

Applies a bias set as a percentage of the maximum output frequency to the speed limit value. *Refer to Speed Limitation and Speed Limit Bias on page 265*.

No.	Parameter Name	Setting Range	Default
d5-05	Speed Limit Bias	0 to 120%	10%

■ d5-06: Speed/Torque Control Switchover Time

Sets the delay time for switching between Speed Control and Torque Control.

No.	Parameter Name	Setting Range	Default
d5-06	Speed/Torque Control Switchover Time	0 to 1000 ms	0 ms

■ d5-08: Unidirectional Speed Limit Bias

Selects how the speed limit bias is applied.

No.	Parameter Name	Setting Range	Default
d5-08	Unidirectional Speed Limit Bias	0, 1	1

Setting 0: Disabled

The speed limit bias is applied in the speed limit direction and the opposite direction.

Setting 1: Enabled

The speed limit bias is applied in the opposite direction of the speed limit only.

◆ d6: Field Weakening and Field Forcing

Field Weakening

The Field Weakening function reduces the output voltage to a predefined level to reduce the energy consumption of the motor. To activate the Field Weakening function, use a digital input programmed for H1-□□ = 63. Only use Field Weakening with a known and unchanging light load condition. Use the Energy Saving function (b8-□□ parameters) when Energy Saving for various different load conditions is required.

Field Forcing

The Field Forcing function compensates the delaying influence of the motor time constant when changing the excitation current reference and improves motor responsiveness. Field Forcing is ineffective during DC Injection Braking.

■ d6-01: Field Weakening Level

Sets the level to which the output voltage is reduced when Field Weakening is activated. Set as percentage of the maximum output voltage.

No.	Parameter Name	Setting Range	Default
d6-01	Field Weakening Level	0 to 100%	80%

■ d6-02: Field Weakening Frequency Limit

Sets the minimum output frequency at which field weakening can be activated. Field Weakening cannot be activated for frequencies below d6-02.

No.	Parameter Name	Setting Range	Default
d6-02	Field Weakening Frequency Limit	0 to 400.0 Hz	0.0 Hz

■ d6-03: Field Forcing Selection

Enables or disables the Field Forcing function.

No.	Parameter Name	Setting Range	Default
d6-03	Field Forcing Selection	0, 1	0

Setting 0: Disabled

Setting 1: Enabled

■ d6-06: Field Forcing Limit

Sets the maximum level at which the Field Forcing function can boost the excitation current reference. The value is set as a percentage of the motor no load current. This parameter does not normally need to be changed.

No.	Parameter Name	Setting Range	Default
d6-06	Field Forcing Limit	100 to 400%	400%

◆ d7: Offset Frequency

■ d7-01 to d7-03: Offset Frequency 1 to 3

Three different offset values can be added to the frequency reference. They can be selected using digital inputs programmed for Offset frequency 1, 2, and 3 (H1-□□ = 44, 45, 46). The selected offset values are added together if multiple inputs are closed simultaneously. The value is set as a percentage of the Maximum Output Frequency.

Note: This function can replace the "Trim Control" function (H1-□□ = 1C, 1D) of older Yaskawa drives.

No.	Parameter Name	Setting Range	Default
d7-01	Offset Frequency 1	-100.0 to 100.0%	0%
d7-02	Offset Frequency 2	-100.0 to 100.0%	0%
d7-03	Offset Frequency 3	-100.0 to 100.0%	0%

Figure 5.54 illustrates the Offset frequency function.

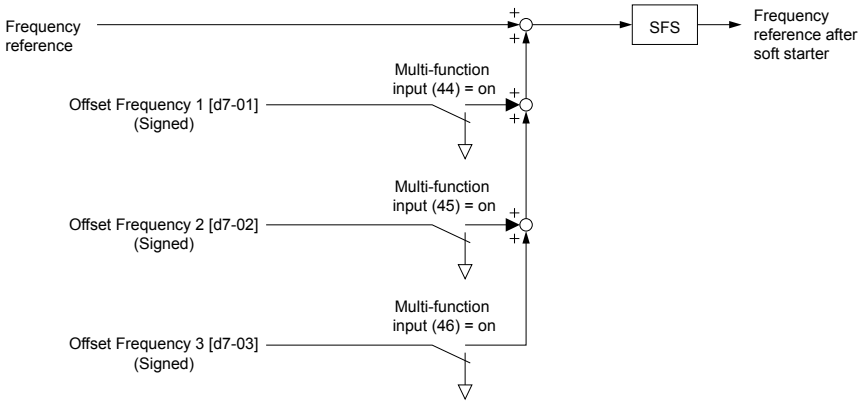

Figure 5.54 Offset Frequency Operation

5.5 E: Motor Parameters

E parameters cover V/f pattern and motor data settings.

◆ E1: V/f Pattern for Motor 1

■ E1-01: Input Voltage Setting

Adjusts the levels of some protective features of the drive (overvoltage, Stall Prevention, etc.). Set this parameter to the nominal voltage of the AC power supply.

NOTICE: *Set parameter E1-01 to match the input voltage of the drive. Drive input voltage (not motor voltage) must be set in E1-01 for the protective features to function properly. Failure to set the correct drive input voltage will result in improper drive operation.*

No.	Parameter Name	Setting Range	Default
E1-01	Input Voltage Setting	155 to 255 V <1>	230 V <1>

<1> Values shown are specific to 200 V class drives. Double the value for 400 V class drives. Multiply the value by 2.875 for 600 V class drives.

E1-01 Related Values

The input voltage setting determines the overvoltage and undervoltage detection levels, the operation levels of the braking transistor, the KEB function, and the overvoltage suppression function.

Voltage	Setting Value of E1-01	ov Detection Level/Dynamic Braking Transistor Detection Level <1> (rr Detection Level)	(Approximate Values)		
			Uv Detection Level (L2-05)	Desired DC Bus Voltage during KEB (L2-11)	ov Suppression / Stall Prevention Level (L3-17)
200 V Class	All settings	410 V / 394 V	190 V	260 V	375 V
400 V Class	setting ≥ 400 V	820 V / 788 V	380 V	500 V	750 V
	setting < 400 V	820 V / 788 V	350 V	460 V	750 V
600 V Class	All settings	1178 V / 1132 V	475 V	635 V	930 V

<1> The braking transistor operation levels are valid for the drive internal braking transistor. When using a CDBR braking unit, refer to instruction manual TOBPC72060000 or TOBPC72060001.

■ V/f Pattern Settings (E1-03)

The drive uses a V/f pattern to adjust the output voltage relative to the frequency reference. There are 15 different predefined V/f patterns (setting 0 to E) from which to select, each with varying voltage profiles, saturation levels (frequency at which maximum voltage is reached), and maximum frequencies. Additionally, one custom V/f pattern is available (setting F) that requires the user to create the pattern using parameters E1-04 through E1-10.

■ E1-03: V/f Pattern Selection

Selects the V/f pattern for the drive and motor from 15 predefined patterns or creates a custom V/f pattern.

No.	Parameter Name	Setting Range	Default
E1-03	V/f Pattern Selection	0 to F <2>	F <1>

<1> Parameter is not reset to the default value when the drive is initialized using A1-03.

<2> Settings 0 through E are not available when A1-02 = 2, 3, 5, 6, or 7.

Setting a Predefined V/f Pattern (Setting 0 to E)

Choose the V/f pattern that best meets the application demands from *Table 5.22*. These settings are available only in V/f Control modes. Set the correct value to E1-03. Parameters E1-04 to E1-13 can only be monitored, not changed.

Note:
1. Setting an improper V/f pattern may result in low motor torque or increased current due to overexcitation.
2. Drive initialization does not reset parameter E1-03.

Table 5.22 Predefined V/f Patterns

Setting	Specification	Characteristic	Application
0	50 Hz	Constant torque	For general purpose applications. Torque remains constant regardless of changes to speed.
1	60 Hz		
2	60 Hz (with 50 Hz base)		
3	72 Hz (with 60 Hz base)		
4	50 Hz, Variable torque 1	Variable torque	For fans, pumps, and other applications where the required torque changes as a function of the speed.
5	50 Hz, Variable torque 2		
6	60 Hz, Variable torque 1		
7	60 Hz, Variable torque 2		
8	50 Hz, mid starting torque	High starting torque	Select high starting torque when: • Wiring between the drive and motor exceeds 150 m. • A large amount of starting torque is required. • An AC reactor is installed.
9	50 Hz, high starting torque		
A	60 Hz, mid starting torque		
B	60 Hz, high starting torque		
C	90 Hz (with 60 Hz base)	Constant output	Output voltage is constant when operating at greater than 60 Hz.
D	120 Hz (with 60 Hz base)		
E	180 Hz (with 60 Hz base)		
F <1>	60 Hz	Constant torque	For general purpose applications. Torque remains constant regardless of changes to speed.

<1> Setting F enables a custom V/f pattern by changing parameters E1-04 to E1-13. When the drive is shipped, the default values for parameters E1-04 to E1-13 are the same as those of setting 1.

Predefined V/f Patterns for Models 2A0004 to 2A0021 (HD), 2A0004 to 2A0018 (ND), 4A0002 to 4A0011 (HD), 4A0002 to 4A0009 (ND), 5A0003 to 5A0009 (HD), and 5A0003 to 5A0006 (ND)

The following tables show details on predefined V/f patterns.

The voltage values in the following graphs are specific to 200 V class drives. Double the values for 400 V class drives. Multiply the values by 2.875 for 600 V drives.

Table 5.23 Constant Torque Characteristics, Settings 0 to 3, F

Setting = 0	50 Hz	Setting = 1, F	60 Hz	Setting = 2	60 Hz	Setting = 3	72 Hz
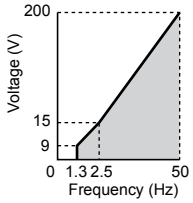		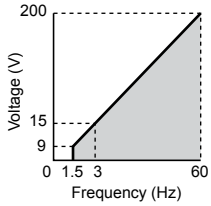		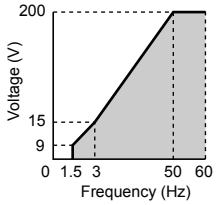		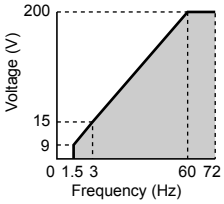	

Table 5.24 Derated Torque Characteristics, Settings 4 to 7

Setting = 4	50 Hz	Setting = 5	50 Hz	Setting = 6	60 Hz	Setting = 7	60 Hz
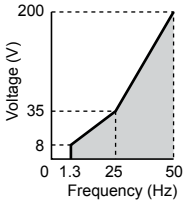		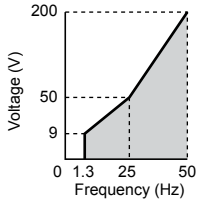		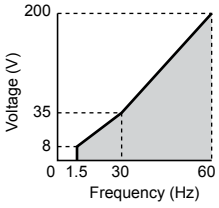		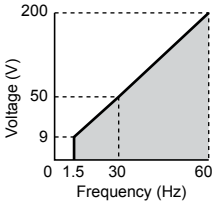	

Table 5.25 High Starting Torque, Settings 8 to B

Setting = 8	50 Hz	Setting = 9	50 Hz	Setting = A	60 Hz	Setting = B	60 Hz
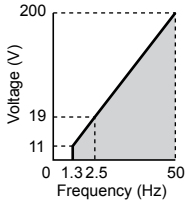		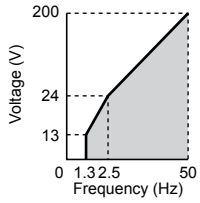		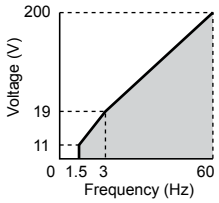		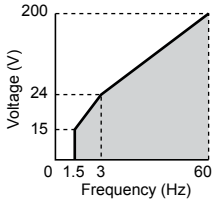	

Table 5.26 Rated Output Operation, Settings C to E

Setting = C	90 Hz	Setting = D	120 Hz	Setting = E	180 Hz
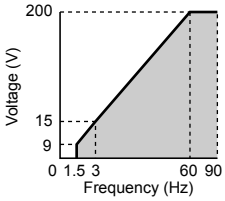		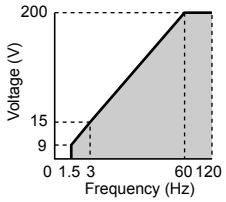		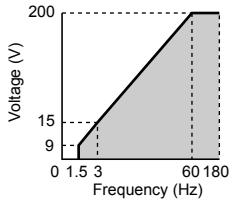	

Predefined V/f Patterns for Models 2A0030 to 2A0211 (HD), 2A0021 to 2A0169 (ND), 4A0018 to 4A0103 (HD), 4A0011 to 4A0088 (ND), 5A0011 to 5A0077 (HD), and 5A0009 to 5A0062 (ND)

The voltage values in the following graphs are specific to 200 V class drives. Double the values for 400 V class drives. Multiply the values by 2.875 for 600 V class drives.

Table 5.27 Rated Torque Characteristics, Settings 0 to 3, F

Setting = 0	50 Hz	Setting = 1, F	60 Hz	Setting = 2	60 Hz	Setting = 3	72 Hz
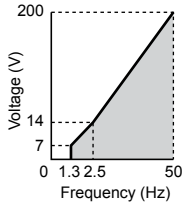		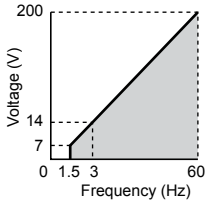		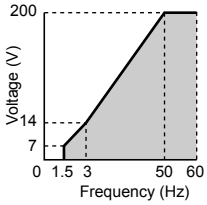		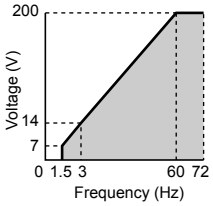	

Table 5.28 Derated Torque Characteristics, Settings 4 to 7

Setting = 4	50 Hz	Setting = 5	50 Hz	Setting = 6	60 Hz	Setting = 7	60 Hz
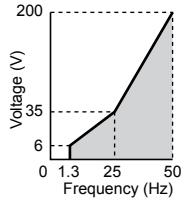		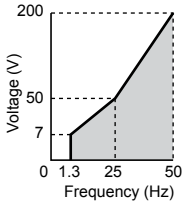		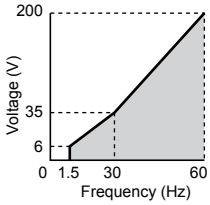		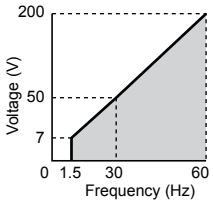	

Table 5.29 High Starting Torque, Settings 8 to B

Setting = 8	50 Hz	Setting = 9	50 Hz	Setting = A	60 Hz	Setting = B	60 Hz
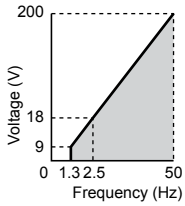		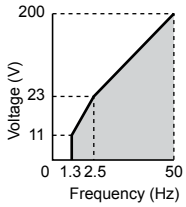		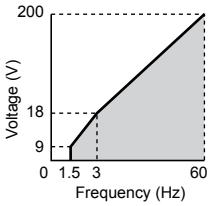		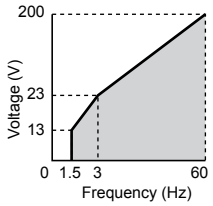	

Table 5.30 Constant Output, Settings C to E

Setting = C	90 Hz	Setting = D	120 Hz	Setting = E	180 Hz
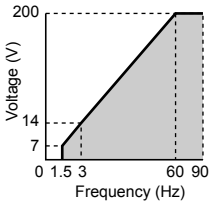		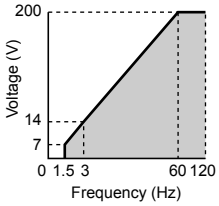		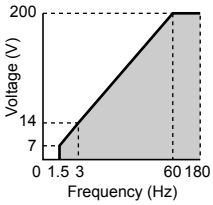	

Predefined V/f Patterns for Models 2A0250 to 2A0415 (HD), 2A0211 to 2A0415 (ND), 4A0139 to 4A1200 (HD), 4A0103 to 4A1200 (ND), 5A0099 to 5A0242 (HD), and 5A0077 to 5A0242 (ND)

The voltage values in the following graphs are specific to 200 V class drives. Double the values for 400 V class drives. Multiply the values by 2.875 for 600 V class drives.

Table 5.31 Rated Torque Characteristics, Settings 0 to 3, F

Setting = 0	50 Hz	Setting = 1, F	60 Hz	Setting = 2	60 Hz	Setting = 3	72 Hz
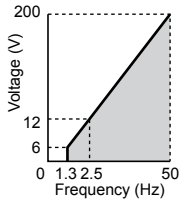		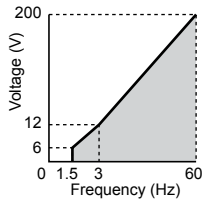		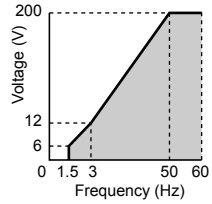		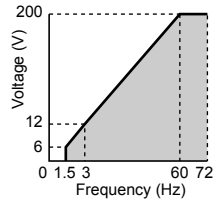	

Table 5.32 Derated Torque Characteristics, Settings 4 to 7

Setting = 4	50 Hz	Setting = 5	50 Hz	Setting = 6	60 Hz	Setting = 7	60 Hz
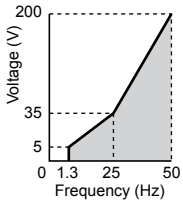		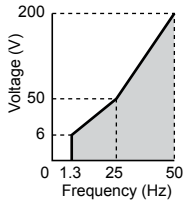		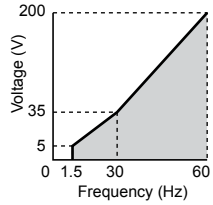		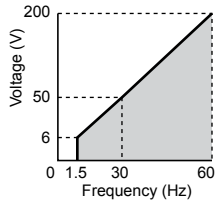	

Table 5.33 High Starting Torque, Settings 8 to B

Setting = 8	50 Hz	Setting = 9	50 Hz	Setting = A	60 Hz	Setting = B	60 Hz
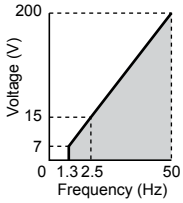		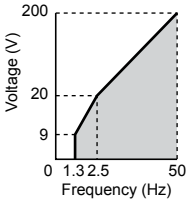		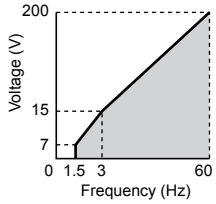		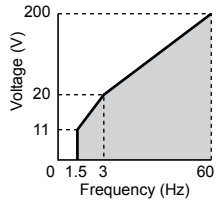	

Table 5.34 Constant Output, Settings C to E

Setting = C	90 Hz	Setting = D	120 Hz	Setting = E	180 Hz
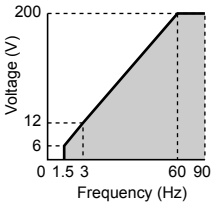		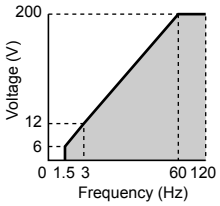		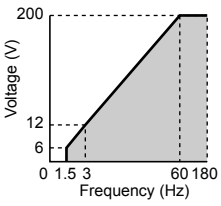	

Setting a Custom V/f Pattern (Setting F: Default)

Setting parameter E1-03 to F allows the user to set up a custom V/f pattern by changing parameters E1-04 to E1-13.

■ V/f Pattern Settings E1-04 to E1-13

Set E1-03 ≤ E to monitor, but not change, the V/f pattern using parameters E1-04 to E1-13. To create a new V/f pattern, set E1-03 to F. *Refer to V/f Pattern on page 274* for an example custom V/f pattern.

Note: Certain E1-□□ parameters might not be visible depending on the control mode. *Refer to Parameter List on page 555* for details.

No.	Parameter Name	Setting Range	Default
E1-04	Maximum Output Frequency	40.0 to 400.0 Hz <1>	<2> <3>
E1-05	Maximum Voltage	0.0 to 255.0 V <4>	<2>
E1-06	Base Frequency	0.0 to [E1-04]	<2> <3>
E1-07	Middle Output Frequency	0.0 to [E1-04]	<2>
E1-08	Middle Output Frequency Voltage	0.0 to 255.0 V <4>	<2>
E1-09	Minimum Output Frequency	0.0 to [E1-04] <1>	<2> <3>
E1-10	Minimum Output Frequency Voltage	0.0 to 255.0 V <4>	<2>
E1-11	Middle Output Frequency 2	0.0 to [E1-04]	0.0 Hz <6>

No.	Parameter Name	Setting Range	Default
E1-12	Middle Output Frequency Voltage 2	0.0 to 255.0 V <4>	0.0 V <5> <6>
E1-13	Base Voltage	0.0 to 255.0 V <4>	0.0 V <5> <7>

<1> Default setting is determined by E5-01 in OLV/PM. When E5-01 is set to FFFF the setting range for E1-04 and E1-06 is 10.0 to 400.0 Hz and the setting range for E1-09 is 0.0 to 400.0 Hz.

<2> Default setting is determined by the control method, drive model, and drive duty rating.

<3> When using PM motors, the default setting is determined by the motor code set to E5-01.

<4> Values shown are specific to 200 V class drives. Double the value for 400 V class drives. Multiply the value by 2.875 for 600 V class drives.

<5> The drive changes these settings when Auto-Tuning is performed (Rotational Auto-Tuning, Stationary Auto-Tuning 1, 2).

<6> Parameter ignored when E1-11 and E1-12 are set to 0.0.

<7> E1-13 and E1-05 are set to the same value when Auto-Tuning is performed.

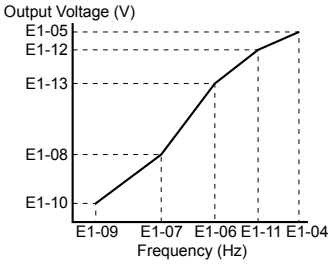

Figure 5.55 V/f Pattern

Note:
1. The following condition must be true when setting up the V/f pattern: E1-09 ≤ E1-07 < E1-06 ≤ E1-11 ≤ E1-04
2. To make the V/f pattern a straight line below E1-06, set E1-09 equal to E1-07. In this case the E1-08 setting is disregarded.
3. E1-03 is unaffected when the drive is initialized, but E1-04 through E1-13 return to their default values.
4. Only use E1-11, E1-12, and E1-13 to fine-tune the V/f pattern in the constant output range. These parameters rarely need to be changed.

◆ E2: Motor 1 Parameters

These parameters contain the motor data needed for motor 1. Performing Auto-Tuning (including Rotational Auto-Tuning and Stationary Auto-Tuning 1 and 2) automatically sets these parameters. ***Refer to Auto-Tuning Fault Detection on page 439*** for details if Auto-Tuning cannot be performed.

Note: The function for switching between two motors cannot be used with a PM motor. E2-□□ parameters are hidden when a PM motor control mode is selected (A1-02 = 5, 6, or 7).

■ E2-01: Motor Rated Current

Provides motor control, protects the motor, and calculates torque limits. Set E2-01 to the full load amps (FLA) stamped on the motor nameplate. If Auto-Tuning completes successfully, the value entered to T1-04 will automatically be saved to E2-01.

No.	Parameter Name	Setting Range	Default
E2-01	Motor Rated Current	10% to 200% of the drive rated current <1>	Determined by C6-01 and o2-04

<1> Display is in the following units:
2A0004 to 2A0040, 4A0002 to 4A0023, and 5A0007 to 5A0017: 0.01 A units.
2A0056 to 2A0415, 4A0031 to 4A0675, and 5A0022 to 5A0242: 0.1 A units.
4A0930 and 4A1200: 1 A units.

Note: An oPE02 error will occur if E2-01 ≤ E2-03. Set E2-03 correctly to prevent this error.

■ E2-02: Motor Rated Slip

Sets the motor rated slip in Hz to provide motor control, protect the motor, and calculate torque limits. This value is automatically set during Auto-Tuning (Rotational Auto-Tuning, Stationary Auto-Tuning 1 and 2).

No.	Parameter Name	Setting Range	Default
E2-02	Motor Rated Slip	0.00 to 20.00 Hz	Determined by C6-01 and o2-04

If Auto-Tuning cannot be performed, calculate the motor rated slip using the information written on the motor nameplate and the formula below:

E2-02 = f - (n × p)/120

(f: rated frequency (Hz), n: rated motor speed (r/min), p: number of motor poles)

■ E2-03: Motor No-Load Current

Set the no-load current for the motor in amperes when operating at the rated frequency and the no-load voltage. The drive sets E2-03 during the Auto-Tuning process (Rotational Auto-Tuning and Stationary Auto-Tuning 1, 2). The motor no-load current listed in the motor test report can also be entered to E2-03 manually. Contact the motor manufacturer to receive a copy of the motor test report.

No.	Parameter Name	Setting Range	Default
E2-03	Motor No-Load Current	0 to [E2-01] <1>	Determined by C6-01 and o2-04

<1> Display is in the following units:
2A0004 to 2A0040, 4A0002 to 4A0023, and 5A0007 to 5A0017: 0.01 A units.
2A0056 to 2A0415, 4A0031 to 4A0675, and 5A0022 to 5A0242: 0.1 A units.
4A0930 and 4A1200: 1 A units.

■ E2-04: Number of Motor Poles

Set the number of motor poles to E2-04. If Auto-Tuning completes successfully, the value entered to T1-06 will automatically be saved to E2-04.

No.	Parameter Name	Setting Range	Default
E2-04	Number of Motor Poles	2 to 48	4

■ E2-05: Motor Line-to-Line Resistance

Sets the line-to-line resistance of the motor stator winding. If Auto-Tuning completes successfully, this value is automatically calculated. Enter this value as line-to-line and not for each motor phase.

If Auto-Tuning is not possible, contact the motor manufacturer to find out the line-to-line resistance or measure it manually. When using the manufacturer motor test report, calculate E2-05 by one of the formulas below:

- E-type insulation: Multiply 0.92 times the resistance value (Ω) listed on the test report at 75 °C.
- B-type insulation: Multiply 0.92 times the resistance value (Ω) listed on the test report at 75 °C.
- F-type insulation: Multiply 0.87 times the resistance value (Ω) listed on the test report at 115 °C.

No.	Parameter Name	Setting Range	Default
E2-05	Motor Line-to-Line Resistance	0.000 to 65000 mΩ <1>	Determined by C6-01 and o2-04

<1> Units are expressed in mΩ for models 4A0930 and 4A1200.

■ E2-06: Motor Leakage Inductance

Sets the voltage drop due to motor leakage inductance as a percentage of motor rated voltage. This value is automatically set during Auto-Tuning (Rotational Auto-Tuning, Stationary Auto-Tuning 1, 2).

No.	Parameter Name	Setting Range	Default
E2-06	Motor Leakage Inductance	0.0 to 40.0%	Determined by C6-01 and o2-04

■ E2-07: Motor Iron-Core Saturation Coefficient 1

Sets the motor iron saturation coefficient at 50% of the magnetic flux. If Rotational Auto-Tuning completes successfully, then this value is automatically calculated and set to E2-07. This coefficient is used when operating with constant output.

No.	Parameter Name	Setting Range	Default
E2-07	Motor Iron-Core Saturation Coefficient 1	0.00 to 0.50	0.50

■ E2-08: Motor Iron-Core Saturation Coefficient 2

Sets the motor iron saturation coefficient at 75% of the magnetic flux. If Rotational Auto-Tuning completes successfully, then this value is automatically calculated and set to E2-08. This coefficient is used when operating with constant output.

No.	Parameter Name	Setting Range	Default
E2-08	Motor Iron-Core Saturation Coefficient 2	E2-07 to 0.75	0.75

■ E2-09: Motor Mechanical Loss

Sets the motor mechanical loss as a percentage of motor rated power (kW) capacity.

Adjust this setting in the following circumstances:

- When there is a large amount of torque loss due to motor bearing friction.
- When there is a large amount of torque loss in a fan or pump application.

The setting for the mechanical loss is added to the torque.

No.	Parameter Name	Setting Range	Default
E2-09	Motor Mechanical Loss	0.0 to 10.0%	0.0%

■ E2-10: Motor Iron Loss for Torque Compensation

Sets the motor iron loss in watts.

No.	Parameter Name	Setting Range	Default
E2-10	Motor Iron Loss for Torque Compensation	0 to 65535 W	Determined by C6-01 and o2-04

■ E2-11: Motor Rated Power

Sets the motor rated power in kW. If Auto-Tuning completes successfully, the value entered to T1-02 will automatically be saved to E2-11.

No.	Parameter Name	Setting Range	Default
E2-11	Motor Rated Power	0.00 to 650.00 kW	Determined by C6-01 and o2-04

Note: The display resolution depends on the rated output power of the drive after setting the Drive Duty in parameter C6-01. Drive models 2A0004 to 4A0515 display this value in units of 0.01 kW (two decimal places). Drive models 4A0675 to 4A1200 display this value in units of 0.1 kW (one decimal place). *Refer to Nameplate on page 35* for details.

■ Setting Motor Parameters Manually

Follow the instructions below when setting motor-related parameters manually instead of Auto-Tuning. Refer to the motor test report included with the motor to ensure the correct data is entered into the drive.

Set the Motor Rated Current

Enter the motor rated current listed on the nameplate of the motor to E2-01.

Set the Motor Rated Slip

Calculate the motor rated slip using the base speed listed on the motor nameplate. Refer to the formula below, then enter that value to E2-02.

Motor rated slip = rated frequency [Hz] – base speed [r/min] × (no. of motor poles) / 120

Set the No-Load Current

Enter the no-load current at rated frequency and rated voltage to E2-03. This information is not usually listed on the nameplate. Contact the motor manufacturer if the data cannot be found.

The default setting of the no-load current is for performance with a 4-pole Yaskawa motor.

Set the Number of Motor Poles

Enter the number of motor poles as indicated on motor nameplate. This is required when A1-02 = 0 to 3 (induction motor control methods).

Set the Line-to-Line Resistance

E2-05 is normally set during Auto-Tuning. If Auto-Tuning cannot be performed, contact the motor manufacturer to determine the correct resistance between motor lines. The motor test report can also be used to calculate this value using the formulas below:

- E-type insulation: Multiply 0.92 times the resistance value (Ω) listed on the test report at 75 °C.
- B-type insulation: Multiply 0.92 times the resistance value (Ω) listed on the test report at 75 °C.

- F-type insulation: Multiply 0.87 times the resistance value (Ω) listed on the test report at 115 °C.

Set the Motor Leakage Inductance

The motor leakage inductance set to E2-06 determines the amount of voltage drop relative to the motor rated voltage. Enter this value for motors with a low degree of inductance, such as high-speed motors. This information is usually not listed on the motor nameplate. Contact the motor manufacturer if the data cannot be found.

Set the Motor Iron-Core Saturation Coefficient 1, 2

E2-07 and E2-08 are set when Auto-Tuning is performed.

Set the Motor Mechanical Loss

Only required in Closed Loop Vector Control. The drive compensates for the degree of mechanical loss with torque compensation. Although E2-09 rarely needs to be changed, adjustment may be necessary in the following circumstances:

- When there is a large amount of torque loss due to motor bearing friction.
- When there is a large amount of torque loss in a fan or pump application.

Set the Motor Iron Loss for Torque Compensation

Only required when using V/f Control. Enter this value in watts to E2-10. The drive uses this setting to improve the precision of torque compensation.

◆ E3: V/f Pattern for Motor 2

These parameters set the V/f pattern used for motor 2. *Refer to Setting 16: Motor 2 Selection on page 303* for details on switching motors.

Note: The function for switching between two motors cannot be used with a PM motor. E3-□□ parameters are hidden when a PM motor control mode is selected (A1-02 = 5, 6, or 7).

■ E3-01: Motor 2 Control Mode Selection

Selects the control mode for motor 2. A control mode for PM motors cannot be selected for motor 2.

No.	Parameter Name	Setting Range	Default
E3-01	Motor 2 Control Mode Selection	0 to 3	0

Note: L1-01 determines protection from motor overload (oL1) in motor 2 and motor 1.

Setting 0: V/f Control

Setting 1: V/f Control with PG

Setting 2: Open Loop Vector Control

Setting 3: Closed Loop Vector Control

■ E3-04 to E3-13

Parameters E3-04 through E3-13 set up the V/f pattern used for motor 2 as shown in *Figure 5.56*.

Note: Certain E3-□□ parameters might not be visible depending on the control mode. *Refer to Parameter List on page 555* for details.

No.	Parameter Name	Setting Range	Default
E3-04	Motor 2 Max Output Frequency	40.0 to 400.0 Hz	<2>
E3-05	Motor 2 Max Voltage	0.0 to 255.0 V <1>	<2>
E3-06	Motor 2 Base Frequency	0.0 to [E3-04]	<2>
E3-07	Motor 2 Mid Output Frequency	0.0 to [E3-04]	<2>
E3-08	Motor 2 Mid Output Frequency Voltage	0.0 to 255.0 V <1>	<2>
E3-09	Motor 2 Minimum Output Frequency	0.0 to [E3-04]	<2>
E3-10	Motor 2 Minimum Output Frequency Voltage	0.0 to 255.0 V <1>	<2>
E3-11	Motor 2 Mid Output Frequency 2	0.0 to [E3-04]	0.0 Hz <4>
E3-12	Motor 2 Mid Output Frequency Voltage 2	0.0 to 255.0 V <1>	0.0 V <3> <4>
E3-13	Motor 2 Base Voltage	0.0 to 255.0 V <1>	0.0 V <3>

<1> Values shown here are specific to 200 V class drives. Double the value for 400 V class drives. Multiply the value by 2.875 for 600 V class drives.

<2> Default setting is determined by the control mode selected for motor 2 (E3-01).
<3> The drive sets this value when Auto-Tuning is performed (Rotational Auto-Tuning and Stationary Auto-Tuning 1, 2).
<4> Parameter ignored when E3-11 and E3-12 are set to 0.0.

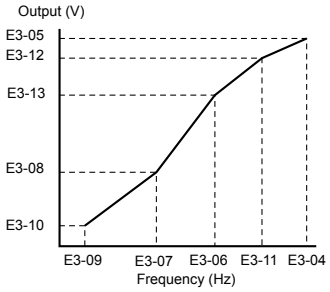

Figure 5.56 V/f Pattern for Motor 2

Note:
1. The following conditions must be true when setting up the V/f pattern: E3-09 ≤ E3-07 < E3-06 ≤ E3-11 ≤ E3-04
2. To make the V/f pattern a straight line at a frequency lower than E3-06, set E3-09 equal to E3-07. In this case, E3-08 is disregarded.
3. Parameters E3-04 through E3-13 are reset to their default values when the drive is initialized.
4. Only use E3-11, E3-12, and E3-13 to fine-tune the V/f pattern in the constant output range. These parameters rarely need to be changed.

◆ E4: Motor 2 Parameters

E4 parameters contain the motor data for motor 2. These parameters are usually set automatically during the Auto-Tuning process for vector control modes (Rotational Auto-Tuning, Stationary Auto-Tuning 1 and 2). ***Refer to Auto-Tuning Fault Detection on page 439*** for details if Auto-Tuning cannot be performed.

Note: The function for switching between two motors cannot be used with a PM motor. E4-□□ parameters are hidden when a PM motor control mode is selected (A1-02 = 5, 6, or 7).

■ E4-01: Motor 2 Rated Current

Protects the motor and calculates torque limits. Set E4-01 to the full load amps (FLA) stamped on the nameplate of motor 2. If Auto-Tuning completes successfully, the value entered to T1-04 will automatically be saved to E4-01.

No.	Parameter Name	Setting Range	Default
E4-01	Motor 2 Rated Current	10 to 200% of the drive rated current. <1>	Determined by C6-01 and o2-04

<1> Display is in the following units:
2A0004 to 2A0040, 4A0002 to 4A0023, and 5A0007 to 5A0017: 0.01 A units.
2A0056 to 2A0415, 4A0031 to 4A0675, and 5A0022 to 5A0242: 0.1 A units.
4A0930 and 4A1200: 1 A units.

Note: An oPE02 error will occur if the motor rated current in E4-01 is set lower than the motor no-load current in E4-03. Set E4-03 correctly to prevent this error.

■ E4-02: Motor 2 Rated Slip

Sets the motor 2 rated slip frequency and is the basis for slip compensation value. The drive calculates this value automatically during Auto-Tuning (Rotational Auto-Tuning and Stationary Auto-Tuning 1, 2).

Refer to E2-02: Motor Rated Slip on page 274 for information on calculating the motor rated slip.

No.	Parameter Name	Setting Range	Default
E4-02	Motor 2 Rated Slip	0.00 to 20.00 Hz	Determined by C6-01 and o2-04

■ E4-03: Motor 2 Rated No-Load Current

Sets the no-load current for motor 2 in amperes when operating at the rated frequency and the no-load voltage. The drive sets E2-03 during the Auto-Tuning process (Rotational Auto-Tuning and Stationary Auto-Tuning 1, 2). The motor no-load current listed in the motor test report can also be entered to E2-03 manually. Contact the motor manufacturer for a copy of the motor test report.

No.	Parameter Name	Setting Range	Default
E4-03	Motor 2 Rated No-Load Current	0 to [E4-01] <1>	Determined by C6-01 and o2-04

<1> Display is in the following units:
2A0004 to 2A0040, 4A0002 to 4A0023, and 5A0007 to 5A0017: 0.01 A units.
2A0056 to 2A0415, 4A0031 to 4A0675, and 5A0022 to 5A0242: 0.1 A units.
4A0930 and 4A1200: 1 A units.

■ E4-04: Motor 2 Motor Poles

Sets the number of poles for motor 2. If Auto-Tuning completes successfully, the value entered to T1-06 will be automatically saved to E4-04.

No.	Parameter Name	Setting Range	Default
E4-04	Motor 2 Motor Poles	2 to 48	4

■ E4-05: Motor 2 Line-to-Line Resistance

Sets the line-to-line resistance for the motor 2 stator winding. If Auto-Tuning completes successfully, this value is automatically calculated. Enter this value as line-to-line and not for each motor phase. ***Refer to E2-05: Motor Line-to-Line Resistance on page 275*** to manually enter this parameter setting.

No.	Parameter Name	Setting Range	Default
E4-05	Motor 2 Line-to-Line Resistance	0.000 to 65000 mΩ <1>	Determined by C6-01 and o2-04

<1> Units are expressed in mΩ for models 4A0930 and 4A1200.

■ E4-06: Motor 2 Leakage Inductance

Sets the voltage drop due to motor leakage inductance as a percentage of rated voltage of motor 2. This value is automatically set during Auto-Tuning (Rotational Auto-Tuning and Stationary Auto-Tuning 1, 2).

No.	Parameter Name	Setting Range	Default
E4-06	Motor 2 Leakage Inductance	0.0 to 40.0%	Determined by C6-01 and o2-04

■ E4-07: Motor 2 Motor Iron-Core Saturation Coefficient 1

Sets the motor 2 iron saturation coefficient at 50% of magnetic flux. This value is automatically set during Rotational Auto-Tuning. Adjust this parameter when operating in the constant output range.

No.	Parameter Name	Setting Range	Default
E4-07	Motor 2 Motor Iron-Core Saturation Coefficient 1	0.00 to 0.50	0.50

■ E4-08: Motor 2 Motor Iron-Core Saturation Coefficient 2

Sets the motor iron saturation coefficient at 75% of magnetic flux. This value is automatically set during Rotational Auto-Tuning. Adjust this parameter when operating in the constant output range.

No.	Parameter Name	Setting Range	Default
E4-08	Motor 2 Motor Iron-Core Saturation Coefficient 2	[E4-07] to 0.75	0.75

■ E4-09: Motor 2 Mechanical Loss

Sets the motor mechanical loss as a percentage of motor rated power (kW).

Although E4-09 rarely needs to be changed, adjustment may be necessary in the following circumstances:

- When there is a large amount of torque loss due to motor bearing friction.
- When there is a large amount of torque loss in a fan or pump application.

The setting for the mechanical loss is added to the torque.

No.	Parameter Name	Setting Range	Default
E4-09	Motor 2 Mechanical Loss	0.0 to 10.0%	0.0%

■ E4-10: Motor 2 Iron Loss

Sets the motor 2 iron loss in watts.

No.	Parameter Name	Setting Range	Default
E4-10	Motor 2 Iron Loss	0 to 65535 W	Determined by C6-01 and o2-04

■ E4-11: Motor 2 Rated Power

Sets the motor 2 rated power. If Auto-Tuning completes successfully, the value entered to T1-02 will automatically be saved to E4-11.

No.	Parameter Name	Setting Range	Default
E4-11	Motor 2 Rated Power	0.00 to 650.00 kW	Determined by o2-04

Note: The display resolution depends on the rated output power of the drive after setting the Drive Duty in parameter C6-01. Drive models 2A0004 to 4A0515 display this value in units of 0.01 kW (two decimal places). Drive models 4A0675 to 4A1200 display this value in units of 0.1 kW (one decimal place). *Refer to Nameplate on page 35* for details.

◆ E5: PM Motor Settings

These parameters set the motor data of a PM motor.

When using Yaskawa motors, set up the E5-□□ parameters by entering the motor code written on the motor nameplate.

Perform Auto-Tuning for all other PM motors. The motor data can also be entered manually, if known.

Note:
1. E5-□□ parameters are visible only when a PM motor control mode is selected (A1-02 = 5, 6, or 7).
2. E5-□□ parameters are not reset when the drive is initialized using parameter A1-03.

When using a Yaskawa motor without a motor code or when using a PM motor from another company, set the parameters according to the motor nameplate values and test report values.

■ E5-01: Motor Code Selection (for PM Motors)

When using a Yaskawa motor with a motor code, set the motor code for the PM motor being used. The drive automatically sets several parameters to appropriate values depending on the motor code.

When using a Yaskawa motor without a motor code or a non-Yaskawa PM motor, set the parameters according to the motor nameplate and test report values.

Setting parameter E5-01 to FFFF allows the motor data to be manually set using the E5-□□ parameters.

No.	Parameter Name	Setting Range	Default
E5-01	Motor Code Selection (for PM Motors)	0000 to FFFF	Determined by A1-02, C6-01 and o2-04

Note:
1. E5-□□ parameters are not reset when the drive is initialized using parameter A1-03.
2. When E5-01 is set to a value other than FFFF, the drive will not initialize using parameter A1-03
3. Changing E5-01 to FFFF from value other than FFFF will not change the values of parameters E5-02 through E5-24.
4. Set E5-01 to FFFF when using a motor other than a Yaskawa SMRA, SSR1, or SST4 series.
5. Default settings are:
   OLV/PM, AOLV/PM: Yaskawa SSR1 Series (1750 r/min)
   CLV/PM: Yaskawa SST4 Series (1750 r/min)
6. Selection may vary depending on the motor code entered to E5-01.
7. If an alarm or hunting occurs despite using a motor code, enter the value indicated on the nameplate. *Refer to Auto-Tuning for Permanent Magnet Motors on page 177* for details.

Figure 5.57 explains the motor code setting.

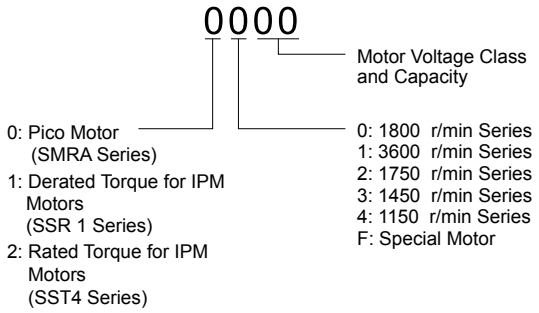

Figure 5.57 PM Motor Code

■ E5-02: Motor Rated Power (for PM Motors)

Sets the rated power of the motor. Determined by the value set to T2-04 during Stationary Auto-Tuning for PM motors or by entering the motor code to E5-01.

No.	Parameter Name	Setting Range	Default
E5-02	Motor Rated Power (for PM Motors)	0.10 to 650.00 kW	Determined by E5-01

■ E5-03: Motor Rated Current (for PM Motors)

Sets the motor rated current in amps. Automatically set when the value is entered to T2-06 during Auto-Tuning.

No.	Parameter Name	Setting Range	Default
E5-03	Motor Rated Current (for PM Motors)	10 to 200% of drive rated current <1>	Determined by E5-01

<1> Display is in the following units:
2A0004 to 2A0040, 4A0002 to 4A0023, and 5A0007 to 5A0017: 0.01 A units.
2A0056 to 2A0415, 4A0031 to 4A0675, and 5A0022 to 5A0242: 0.1 A units.
4A0930 and 4A1200: 1 A units.

■ E5-04: Number of Motor Poles (for PM Motors)

Sets the number of motor poles. Automatically set when the value is entered to T2-08 during Auto-Tuning.

No.	Parameter Name	Setting Range	Default
E5-04	Number of Motor Poles (for PM Motors)	2 to 48	Determined by E5-01

■ E5-05: Motor Stator Resistance (r1) (for PM Motors)

Set the resistance for one motor phase. Do not enter the line-to-line resistance into E5-05 when measuring the resistance manually.

No.	Parameter Name	Setting Range	Default
E5-05	Motor Stator Resistance (for PM Motors)	0.000 to 65.000 Ω	Determined by E5-01

■ E5-06: Motor d-Axis Inductance (Ld) (for PM Motors)

Sets the d-Axis inductance in 0.01 mH units. This parameter is set during the Auto-Tuning process.

No.	Parameter Name	Setting Range	Default
E5-06	Motor d-Axis Inductance (for PM Motors)	0.00 to 300.00 mH	Determined by E5-01

■ E5-07: Motor q-Axis Inductance (Lq) (for PM Motors)

Sets the q-Axis inductance in 0.01 mH units. This parameter is set during the Auto-Tuning process.

No.	Parameter Name	Setting Range	Default
E5-07	Motor q-Axis Inductance (for PM Motors)	0.00 to 600.00 mH	Determined by E5-01

■ E5-09: Motor Induction Voltage Constant 1 (Ke) (for PM Motors)

Sets the induced peak voltage per phase in units of 0.1 mV/(rad/s) [electrical angle]. Set this parameter when using an IPM motor with derated torque (SSR1 series or equivalent) or an IPM motor with constant torque (SST4 series or equivalent).

Set the voltage constant with E5-09 or E5-24 when E5-01 is set to FFFF. This parameter is set during Auto-Tuning for PM motors.

No.	Parameter Name	Setting Range	Default
E5-09	Motor Induction Voltage Constant 1 (for PM Motors)	0.0 to 2000.0 mV/(rad/s)	Determined by E5-01

Note: Set E5-24 to 0 when setting E5-09. However, setting both E5-09 and E5-24 to 0 will trigger an alarm. An alarm will also be triggered if neither E5-09 nor E5-24 are set to 0. When E5-01 is set to FFFF, then E5-09 = 0.0.

■ E5-11: Encoder Z Pulse Offset (ΔΘ) (for PM Motors)

Sets the offset between the rotor magnetic axis and the Z Pulse of the connected encoder. This parameter is set during Auto-Tuning for PM motors and during Z Pulse Tuning.

No.	Parameter Name	Setting Range	Default
E5-11	Encoder Z Pulse Offset (for PM Motors)	-180.0 to 180.0 deg	0.0 deg

■ E5-24: Motor Induction Voltage Constant 2 (Ke) (for PM Motors)

Set the induced phase-to-phase rms voltage in units of 0.1 mV/(r/min) [mechanical angle]. Set this parameter when using an SPM Motor (SMRA Series or equivalent).

When E5-01 is set to FFFF, use either E5-09 or E5-24 for setting the voltage constant. This parameter is set during Parameter Auto-Tuning for PM motors.

No.	Parameter Name	Setting Range	Default
E5-24	Motor Induction Voltage Constant 2 (for PM Motors)	0.0 to 6500.0 mV/(r/min)	Determined by E5-01

Note: Set E5-24 to 0.0 when setting E5-09. However, setting both E5-09 and E5-24 to 0.0 will trigger an alarm. An alarm will also be triggered if neither E5-09 nor E5-24 are set to 0.0. When E5-01 is set to FFFF, then E5-09 should be set to 0.0.

■ E5-25: Polarity Switch for Initial Polarity Estimation Timeout (for PM Motors)

Switches polarity for initial polarity estimation. There is normally no need to change this parameter from the default value.

If “Sd = 1” is listed on the nameplate or in a test report for a Yaskawa motor, this parameter should be set to 1.

Note: Available control mode varies by drive model:
2A0004 to 2A0415 and 4A0002 to 4A0675: Available when A1-02 = 6, 7
4A0930 and 4A1200: Available when A1-02 = 5, 6, or 7.

No.	Parameter Name	Setting Range	Default
E5-25	Polarity Switch for Initial Polarity Estimation Timeout (for PM Motors)	0, 1	0

Setting 0: “Sd = 1” is not listed

Setting 1: “Sd = 1” is listed

5.6 F: Option Settings

◆ F1: PG Speed Control Card Settings

Yaskawa offers PG-X3, PG-B3, PG-RT3, and PG-F3 motor encoder PG option cards. Use the CN5-C port when using only one PG option card and use the CN5-C and CN5-B ports when using two PG option cards. When programming one of the multi-function input terminals to act as a switch between two motors (H1-□□= 16), use the card connected to port CN5-C for motor 1 and use the card connected to CN5-B for motor 2.

Table 5.35 lists the parameters that must be set for each option card port.

Table 5.35 Option Card Ports and Corresponding Parameters

Port	Parameters
CN5-C and CN5-B (common)	F1-02 to F1-04, F1-08 to F1-11, F1-14
CN5-C only	F1-01, F1-05, F1-06, F1-12, F1-13, F1-18 to F1-21
CN5-B only	F1-31 to F1-37

■ F1-01, F1-31: PG 1 and PG 2 Pulses Per Revolution

Sets the number encoder number of pulses per revolution.

No.	Parameter Name	Option Port	Setting Range	Default
F1-01	PG 1 Pulses Per Revolution	CN5-C	1 to 60000 ppr <1>	1024 ppr
F1-31	PG 2 Pulses Per Revolution	CN5-B	1 to 60000 ppr	1024 ppr

<1> Setting range is 0 to 15000 in PM motor control modes

■ F1-02, F1-14: PG Open (PGo) Circuit Operation Selection, Detection Time

A PGo fault is triggered if the drive receives no pulse signal for longer than the time set in F1-14. Set the stopping method for a PGo fault in parameter F1-02.

Note: An ov or oC error may occur depending on motor speed and load conditions.

No.	Parameter Name	Option Port	Setting Range	Default
F1-02	Operation Selection at PG Open Circuit (PGo)	CN5-B, CN5-C	0 to 4	1
F1-14	PG Open-Circuit Detection Time	CN5-B, CN5-C	0.0 to 10.0 s	2.0 s

Parameter F1-02 Settings:

Setting 0: Ramp to stop (uses the deceleration time set to C1-02)

Setting 1: Coast to stop

Setting 2: Fast Stop (uses the Fast Stop time set to C1-09)

Setting 3: Alarm only

Note: Due to potential damage to motor and machinery, refrain from using the “Alarm only” or “No alarm display” settings except under special circumstances.

Setting 4: No alarm display

Note: Due to potential damage to motor and machinery, refrain from using the “Alarm only” or “No alarm display” settings except under special circumstances.

■ F1-03, F1-08, F1-09: Overspeed (oS) Operation Selection, Detection Level, Delay Time

An oS fault is triggered when the speed feedback exceeds the value set in F1-08 for longer than the time set in F1-09. Set the stopping method for an oS fault in parameter F1-03.

Note: In AOLV/PM, the motor will coast to a stop (F1-03 = 1). The setting for F1-03 cannot be changed to 0, 2, or 3.

No.	Parameter Name	Option Port	Setting Range	Default
F1-03	Operation Selection at Overspeed (oS)	CN5-B, CN5-C	0 to 3	1
F1-08	Overspeed Detection Level	CN5-B, CN5-C	0 to 120%	115%
F1-09	Overspeed Detection Delay Time	CN5-B, CN5-C	0.0 to 2.0 s	Determined by A1-02

Parameter F1-03 Settings:

Setting 0: Ramp to stop (uses the deceleration time set to C1-02)

Setting 1: Coast to stop

Setting 2: Fast Stop (uses the Fast Stop time set to C1-09)

Setting 3: Alarm only

Note: Due to potential damage to motor and machinery, refrain from using the "Alarm only" setting except under special circumstances.

■ F1-04, F1-10, F1-11: Operation at Speed Deviation (dEv), Detection Level, Delay Time

A speed deviation error (dEv) is triggered when the difference between the frequency reference and the speed feedback exceeds the value set in F1-10 for longer than the time set in F1-1. The stopping method when a speed deviation fault occurs can be selected in parameter F1-04.

No.	Parameter Name	Option Port	Setting Range	Default
F1-04	Operation Selection at Deviation (dEv)	CN5-B, CN5-C	0 to 3	3
F1-10	Excessive Speed Deviation Detection Level	CN5-B, CN5-C	0 to 50%	10%
F1-11	Excessive Speed Deviation Detection Delay Time	CN5-B, CN5-C	0.0 to 10.0 s	0.5 s

Settings for Parameter F1-04:

Setting 0: Ramp to stop (uses the deceleration time set to C1-02)

Setting 1: Coast to stop

Setting 2: Fast Stop (uses the Fast Stop time set to C1-09)

Setting 3: Alarm only (drive continues operating while "dEv" flashes on the screen)

■ F1-05, F1-32: PG 1, PG 2 Rotation Selection

Determines the direction indicated by the pulses from the PG feedback encoder for motor 1 and motor 2.

See PG option card instruction manual for details on setting the direction for the PG encoder and the motor.

No.	Parameter Name	Option Port	Setting Range	Default
F1-05	PG 1 Rotation Selection	CN5-C	0, 1	Determined by A1-02 <1>
F1-32	PG 2 Rotation Selection	CN5-B	0, 1	0

<1> Default is 0 when A1-02 = 1 or 3. Default is 1 when A1-02 = 7.

Setting 0: A pulse leads with Forward run command

Setting 1: B pulse leads with Forward run command

■ F1-06, F1-35: PG 1, PG 2 Division Rate for PG Pulse Monitor

Sets the ratio between the pulse input and the pulse output of a PG option card as a three-digit number, where the first digit (n) sets the numerator and the second and third digit (m) set the denominator as shown below:

$$f_{Pulse\ Input} = f_{Pulse\ Output} \cdot \frac{(1 + n)}{m}$$

Example: Set F1-06 to 032 for a ratio of 1/32 between the PG card pulse input and output.

No.	Parameter Name	Option Port	Setting Range	Default
F1-06	PG 1 Division Rate for PG Pulse Monitor	CN5-C	001 to 032, 102 to 132 (1 to $\frac{1}{32}$)	001
F1-35	PG 2 Division Rate for PG Pulse Monitor	CN5-B	1 to 132 (1 to $\frac{1}{32}$)	001

■ F1-12, F1-13, F1-33, F1-34: PG 1, PG 2 Gear Teeth 1, 2 (V/f w/PG only)

Sets the gear ratio between the motor shaft and the PG encoder. F1-12 and F1-33 set the number of gear teeth on the motor side, while F1-13 and F-34 set the number of gear teeth on the load side. The drive uses the formula below to calculate the motor speed:

$$r/min = \frac{\text{Input pulse frequency from PG} \times 60}{\text{Pulses per Rev (F1-01/31)}} \cdot \frac{\text{Load-side PG gear teeth (F1-12/33)}}{\text{Motor-side PG gear teeth (F1-13/34)}}$$

No.	Parameter Name	Option Port	Setting Range	Default
F1-12	PG 1 Gear Teeth 1	CN5-C	0 to 1000	0
F1-13	PG 1 Gear Teeth 2	CN5-C	0 to 1000	0
F1-33	PG 2 Gear Teeth 1	CN5-B	0 to 1000	0
F1-34	PG 2 Gear Teeth 2	CN5-B	0 to 1000	0

Note: A gear ratio of 1 will be used if any of these parameters are set to 0.

■ F1-18: dv3 Detection Selection (CLV/PM)

Sets the number of times the drive will detect a dv3 situation before triggering a dv3 fault. The drive detects a dv3 condition when the torque reference and speed reference are in opposite directions while the difference between the actual motor speed and the speed reference is greater than 30%. Setting F1-18 to 0 disables dv3 detection.

No.	Parameter Name	Option Port	Setting Range	Default
F1-18	dv3 Detection Selection	CN5-B, CN5-C	0 to 10	10

Note: A common cause for a dv3 fault is the incorrect setting of E5-11. Make sure to enter the correct Z Pulse offset to E5-11.

■ F1-19: dv4 Detection Selection (CLV/PM)

Sets the number of pulses necessary to trigger a dv4 fault when there is a motor speed deviation opposite to the frequency reference. Setting F1-19 to 0 disables dv4 detection.

No.	Parameter Name	Option Port	Setting Range	Default
F1-19	dv4 Detection Selection	CN5-B, CN5-C	0 to 5000	128

Note:
1. A common cause for a dv4 fault is the incorrect setting of E5-11. Make sure to enter the correct Z-pulse offset to E5-11.
2. Set F1-19 to 0 for applications where the direction of the load is the opposite of the speed reference.

■ F1-20, F1-36: PG Option Card Disconnect Detection

Sets whether the drive detects a PG hardware fault (PGoH).

No.	Parameter Name	Option Port	Setting Range	Default
F1-20	PG Option Card Disconnection Detection 1	CN5-C	0, 1	1
F1-36	PG Option Card Disconnection Detection 2	CN5-B	0, 1	1

Setting 0: Disabled

Setting 1: Enabled

■ F1-21, F1-37: PG 1, PG 2 Signal Selection (V/f w/PG only)

Determines whether the signal to the PG option card is single-channel or two-channel.

No.	Parameter Name	Option Port	Setting Range	Default
F1-21	PG 1 Signal Selection	CN5-C	0, 1	0
F1-37	PG 2 Signal Selection	CN5-B	0, 1	0

Setting 0: Single-channel (A channel only)

Setting 1: Two-channel (channels A and B)

■ F1-30: PG Option Card Port for Motor 2 Selection

Specifies the drive port for the PG option card used for motor 2. Set this parameter when switching between motor 1 and motor 2, where both motors supply a speed feedback signal to the drive. Set F1-30 to 0 when using the same PG card for feedback signals from both motors. Set F1-30 to 1 when each motor has its own PG card connected to the drive.

Note: The motor 2 selection function cannot be used with PM motors.

No.	Parameter Name	Setting Range	Default
F1-30	PG Option Card Port for Motor 2 Selection	0, 1	1

Setting 0: CN5-C

Setting 1: CN5-B

■ F1-50: Encoder Selection

Sets up the type of encoder connected to a PG-F3 option card.

Note:
1. Available in drive software versions PRG: 1018 and later.
2. Refer to the PG-F3 labeling in the field designated "C/N" (S + four digit number)" to identify the PG-F3 software version.
3. Parameter is not available in models 4A0930 and 4A1200.

No.	Parameter Name	Setting Range	Default
F1-50	Encoder Selection	0 to 2	0

Setting 0: EnDat 2.1/01, 2.2/01 Serial Communications operation + Sin/Cos

Setting 1: EnDat 2.2/22 Serial Communications operation

The use of EnDat2.2/22 encoders requires a PG-F3 option with software version 0102 or later.

Setting 2: Hiperface

■ F1-51: PGoH Detection Level

Sets the level for detecting PG Hardware Fault (PGoH). Available when F1-20 = 1.

Usually the relation between the sin and cos track is $\sqrt{\sin^2\theta + \cos^2\theta} = 1$.

A speed feedback hardware fault is triggered when the value of the square root falls below the level set in F1-51.

Note: Parameter is not available in models 4A0930 and 4A1200.

No.	Parameter Name	Setting Range	Default
F1-51	PGoH Detection Level	1 to 100%	80%

■ F1-52: Communication Speed of Serial Encoder Selection

Selects the speed for serial communication between a PG-F3 option card and serial encoder.

Note:
1. Available in drive software versions PRG: 1018 and later.
2. Parameter is not available in models 4A0930 and 4A1200.

No.	Parameter Name	Setting Range	Default
F1-52	Communication Speed of Serial Encoder Selection	0 to 3	0

Setting 0: 1M bps / 9600 bps (EnDat 2.2/22 / Hiperface)

Setting 1: 500k bps / 19200 bps (EnDat 2.2/22 / Hiperface)

Setting 2: 1M bps / 38400 bps (EnDat 2.2/22 / Hiperface)

Setting 3: 1M bps / 38400 bps (EnDat 2.2/22 / Hiperface)

◆ F2: Analog Input Card Settings

These parameters set the drive for operation with the analog input option card AI-A3. If no AI-A3 card is connected, drive terminals A1 to A3 are enabled regardless of the F2-01 setting. This section describes parameters that govern operation with an input option card. Refer to the option card instruction manual for specific details on installation, wiring, input signal level selection, and parameter setup.

■ F2-01: Analog Input Option Card Operation Selection

Determines how the input terminals on the AI-A3 option card are used.

No.	Parameter Name	Setting Range	Default
F2-01	Analog Input Option Card Operation Selection	0, 1	0

Setting 0: Separate functions for each terminal (V1, V2, V3 replace terminals A1, A2, A3)

Use the H3-□□ parameters described in *H3-03, H3-04: Terminal A1 Gain and Bias Settings* on page *321* to set the functions and gain and bias levels for an analog reference supplied by AI-A3.

Note: Setting option card terminals for separate input functions (F2-01 = 0) while b1-01 = 3 will trigger an oPE05 error.

Setting 1: Combine input terminal values to create frequency reference (V1, V2, V3 are combined)

This setting adds all three input signals on the AI-A3 option card to create the frequency reference. Set b1-01 to 3 when the option card is the source of the frequency reference for the drive. Set the gain and bias settings for the frequency reference supplied from AI-A3 with F2-02 and F2-03.

■ F2-02, F2-03: Analog Input Option Card Gain, Bias

Parameter F2-02 sets the gain and parameter F2-03 sets the bias for the AI-A3 input signal when the card is used in the combined input signals mode (F2-01 = 1). Both gain and bias are set as a percentage of the maximum output frequency.

No.	Parameter Name	Setting Range	Default
F2-02	Analog Input Option Card Gain	-999.9 to 999.9%	100.0%
F2-03	Analog Input Option Card Bias	-999.9 to 999.9%	0.0%

Note: Enabled only when F2-01 = 1.

◆ F3: Digital Input Card Settings

These parameters set the drive for operation with the option card DI-A3. Refer to the instruction manual packaged with the option card for specific details on installation, wiring, input signal level selection, and parameter setup.

■ F3-01: Digital Input Option Card Input Selection

Determines the type of input for digital option card DI-A3 when o1-03 is set to 0 or 1.

No.	Parameter Name	Setting Range	Default
F3-01	Digital Input Option Card Input Selection	0 to 7	0

Note: BCD input when o1-03 = 2 or 3. Units are determined by o1-03.

Setting 0: BCD, 1% units

Setting 1: BCD, 0.1% units

Setting 2: BCD, 0.01% units

Setting 3: BCD, 1 Hz units

Setting 4: BCD, 0.1 Hz units

Setting 5: BCD, 0.01 Hz units

Setting 6: BCD, special setting (5 digit input), 0.02 Hz units

Setting 7: Binary

The unit and the setting range are determined by F3-03.

F3-03 = 0: 255/100% (-255 to +255)

F3-03 = 1: 4095/100% (-4095 to +4095)

F3-03 = 2: 30000/100% (-33000 to +33000)

Note: BCD input when o1-03 = 2 or 3. Units are determined by o1-03.

■ F3-03: Digital Input Option DI-A3 Data Length Selection

Determines the number of bits for the option card input that sets the frequency reference.

No.	Parameter Name	Setting Range	Default
F3-03	Digital Input Option DI-A3 Data Length Selection	0 to 2	2

Setting 0: 8 bit

Setting 1: 12 bit

Setting 2: 16 bit

◆ F4: Analog Monitor Card Settings

These parameters set the drive for operation with the analog output option card AO-A3. Refer to the instruction manual packaged with the option card for specific details on installation, wiring, input signal level selection, and parameter setup.

■ F4-01, F4-03: Terminal V1, V2 Monitor Selection

Selects the data to output from analog terminal V1. Enter the final three digits of U□-□□ to determine which monitor data is output from the option card. Some monitors are only available in certain control modes.

No.	Parameter Name	Setting Range	Default
F4-01	Terminal V1 Monitor Selection	000 to 999	102
F4-03	Terminal V2 Monitor Selection	000 to 999	103

Note: Set “000” or “031” when using the terminal in through mode. This setting can adjust the V1 and V2 terminal output from PLC via MEMOBUS/Modbus communications or a communications option.

■ F4-02, F4-04, F4-05, F4-06: Terminal V1, V2 Monitor Gain and Bias

Parameters F4-02 and F4-04 determine the gain, while parameters F4-05 and F4-06 set the bias. These parameters are set as a percentage of the output signal from V1 and V2 where 100% equals 10 V output. The terminal output voltage is limited to 10 V.

No.	Parameter Name	Setting Range	Default
F4-02	Terminal V1 Monitor Gain	-999.9 to 999.9%	100.0%
F4-04	Terminal V2 Monitor Gain	-999.9 to 999.9%	50.0%
F4-05	Terminal V1 Monitor Bias	-999.9 to 999.9%	0.0%
F4-06	Terminal V2 Monitor Bias	-999.9 to 999.9%	0.0%

Using Gain and Bias to Adjust Output Signal Level

The output signal is adjustable while the drive is stopped.

Terminal V1

1. View the value set to F4-02 (Terminal V1 Monitor Gain) on the digital operator. A voltage equal to 100% of the parameter being set in F4-01 will be output from terminal V1.
2. Adjust F4-02 viewing the monitor connected to the terminal V1.
3. View the value set to F4-05 on the digital operator, terminal V1 will output a voltage equal to 0% of the parameter being set in F4-01.
4. Adjust F4-05 viewing the output signal on the terminal V1.

Terminal V2

1. View the value set to F4-02 (Terminal V2 Monitor Gain) on the digital operator. A voltage equal to 100% of the parameter being viewed in F4-03 will be output from terminal V2.
2. Adjust F4-04 viewing the monitor connected to the terminal V2.
3. View the value set to F4-06 on the digital operator, terminal V2 will output a voltage equal to 0% of the parameter being set in F4-03.
4. Adjust F4-06 viewing the output signal on the terminal V2.

■ F4-07, F4-08: Terminal V1, V2 Signal Level

Sets the output signal level for terminals V1 and V2.

No.	Parameter Name	Setting Range	Default
F4-07	Terminal V1 Signal Level	0, 1	0
F4-08	Terminal V2 Signal Level	0, 1	0

Setting 0: 0 to 10 V

Setting 1: -10 to 10 V

◆ F5: Digital Output Card Settings

These parameters set the drive for operation with the digital output option card DO-A3. Refer to the instruction manual packaged with the option card for specific details on installation, wiring, input signal level selection, and parameter setup.

■ F5-01 through F5-08: Digital Output Option Card Terminal Function Selection

When F5-09 = 2, the parameters listed in the table below assign functions to the output terminals on the option card.

No.	Name	Setting Range	Default
F5-01	Terminal P1-PC Function Selection	0 to 192	0: During run
F5-02	Terminal P2-PC Function Selection	0 to 192	1: Zero speed
F5-03	Terminal P3-PC Output Selection	0 to 192	2: Speed agree
F5-04	Terminal P4-PC Output Selection	0 to 192	4: Frequency detection 1
F5-05	Terminal P5-PC Output Selection	0 to 192	6: Drive ready
F5-06	Terminal P6-PC Output Selection	0 to 192	37: During frequency output
F5-07	Terminal M1-M2 Output Selection	0 to 192	F: Not used
F5-08	Terminal M3-M4 Output Selection	0 to 192	F: Not used

■ F5-09: DO-A3 Output Mode Selection

Determines how the DO-A3 option card works with the drive.

No.	Parameter Name	Setting Range	Default
F5-09	DO-A3 Output Mode Selection	0 to 2	0

Note: Refer to TOBP C730600 41 Yaskawa AC Drive-Option DO-A3 Installation Manual for more details on F5-09 settings.

Setting 0: Separate Output Functions for Each of 8 Terminals

Setting 1: Binary Output

Setting 2: Output Functions Assigned by F5-01 through F5-08

◆ F6 and F7: Communication Option Card

These parameters configure communication option cards and communication fault detection methods.

Some parameters apply to all communication option cards and some parameters apply to certain network options only. The option cards are applicable to the parameter rows marked with an “O”.

Comm. Protocol	Parameter Range															
	F6-01 to F6-03	F6-04	F6-06 to F6-08	F6-10, F6-11	F6-14	F6-20, F6-21	F6-22	F6-23 to F6-26	F6-30 to F6-32	F6-35, F6-36	F6-45 to F6-49	F6-50 to F6-63	F7-01 to F7-15	F7-16	F7-17 to F7-42	F7-60 to F7-79
CC-Link	O	O	O	O	O	–	–	–	–	–	–	–	–	O	–	–
MECHATROLINK-II	O	–	O	–	O	O	O	O	–	–	–	–	–	O	–	–
MECHATROLINK-III	O	–	O	–	O	O	–	O	–	–	–	–	–	O	–	–
PROFIBUS-DP	O	–	O	–	O	–	–	–	O	–	–	–	–	O	–	O
CANopen	O	–	O	–	O	–	–	–	–	O	–	–	–	O	–	–
EtherCAT	O	–	O	–	O	–	–	–	–	–	–	–	–	O	–	–
BACnet	O	–	O	–	O	–	–	–	–	–	O	–	–	O	–	–

Comm. Protocol	Parameter Range															
	F6-01 to F6-03	F6-04	F6-06 to F6-08	F6-10, F6-11	F6-14	F6-20, F6-21	F6-22	F6-23 to F6-26	F6-30 to F6-32	F6-35, F6-36	F6-45 to F6-49	F6-50 to F6-63	F7-01 to F7-15	F7-16	F7-17 to F7-42	F7-60 to F7-79
DeviceNet	O	–	O	–	O	–	–	–	–	–	–	O	–	O	–	–
LonWorks	O	–	O	–	O	–	–	–	–	–	–	–	–	O	–	–
Modbus TCP/IP	O	–	O	–	O	–	–	–	–	–	–	–	O	O	–	–
PROFINET	O	–	O	–	O	–	–	–	–	–	–	–	O	O	O	–
EtherNet/IP	O	–	O	–	O	–	–	–	–	–	–	–	O	O	O	–

■ F6-01: Communications Error Operation Selection

Determines drive operation when a communication error occurs.

No.	Parameter Name	Setting Range	Default
F6-01	Communications Error Operation Selection	0 to 5	1

Setting 0: Ramp to Stop (Use the Deceleration Time Set to C1-02)

Setting 1: Coast to Stop

Setting 2: Fast Stop (Use the Fast Stop Time Set to C1-09)

Setting 3: Alarm Only (Continue Operation)
Take proper safety measures, such as installing an emergency stop switch, when using this setting.

Setting 4: Alarm and Run at d1-04
Take proper safety measures, such as installing an emergency stop switch, when using this setting.

Setting 5: Alarm and Ramp to stop

■ F6-02: External Fault from Comm. Option Detection Selection

Determines the detection method of an external fault initiated by a communication option (EF0).

No.	Parameter Name	Setting Range	Default
F6-02	External Fault from Comm. Option Detection Selection	0, 1	0

Setting 0: Always Detected

Setting 1: Detection during Run Only

■ F6-03: External Fault from Comm. Option Operation Selection

Determines drive operation when an external fault is initiated by a communication option (EF0).

No.	Parameter Name	Setting Range	Default
F6-03	External Fault from Comm. Option Operation Selection	0 to 3	1

Setting 0: Ramp to Stop

Setting 1: Coast to Stop

Setting 2: Fast Stop

Setting 3: Alarm Only (Continue Operation)

■ F6-06: Torque Reference/Torque Limit Selection from Comm. Option

Selects whether torque reference and torque limit values are assigned to the drive from the network.

No.	Parameter Name	Setting Range	Default
F6-06	Torque Reference/Torque Limit Selection from Comm. Option	0, 1	0

Setting 0: Disabled

Setting 1: Enabled

■ F6-07: NetRef/ComRef Function Selection

Selects the treatment of multi-step speed inputs when the NetRef command is set.

No.	Parameter Name	Setting Range	Default
F6-07	NetRef/ComRef Function Selection	0, 1	0

Setting 0: Multi-step Speed Operation Disabled
Multi-step speed input frequency references are disabled when the NetRef command is selected.

Setting 1: Multi-step Speed Operation Enabled
Multi-step speed inputs are still active and can override the frequency reference from the communications option even when the NetRef command is selected.

■ F6-08: Reset Communication Parameters

Determines whether F6-□□/F7-□□ communication-related parameters are reset after initialization.

No.	Parameter Name	Setting Range	Default
F6-08	Reset Communication Parameters	0, 1	0

Setting 0: Do Not Reset F6-□□/F7-□□ Parameters after Initialization Using A1-03

Setting 1: Reset F6-□□/F7-□□ Parameters after Initialization Using A1-03
Note: F6-08 is not reset when the drive is initialized.

■ F6-14: bUS Error Auto Reset

Selects whether a bUS error can be automatically reset if automatic fault retry is enabled.

No.	Parameter Name	Setting Range	Default
F6-14	bUS Error Auto Reset	0, 1	0

Setting 0: Disabled, Auto Reset Not Possible

Setting 1: Enabled, Auto Reset Possible

■ F7-16: Communication Loss Time Out

Sets the time-out value for communication loss detection in tenths of a second. A value of 0.0 disables the connection time-out.

Example: A value of “100” represents 10.0 seconds.

No.	Parameter Name	Setting Range	Default
F7-16	Communication Loss Time Out	0.0 to 30.0 s	0.0 s

◆ CC-Link Parameters

Parameters F6-04, F6-10, and F6-11 set the drive to operate on a CC-Link network.

■ F6-04: bUS Error Detection Time

Sets the delay time for bUS error detection.

No.	Parameter Name	Setting Range	Default
F6-04	bUS Error Detection Time	0.0 to 5.0 s	2.0 s

■ F6-10: CC-Link Node Address

Sets the node address of a CC-Link option board.

No.	Parameter Name	Setting Range	Default
F6-10	CC-Link Node Address	0 to 64	0

■ F6-11: CC-Link Communication Speed

Sets the communication speed for a CC-Link option card.

No.	Parameter Name	Setting Range	Default
F6-11	CC-Link Communication Speed	0 to 4	0

Setting 0: 156 kbps
Setting 1: 625 kbps
Setting 2: 2.5 Mbps
Setting 3: 5 Mbps
Setting 4: 10 Mbps

◆ MECHATROLINK Parameters

■ F6-20: MECHATROLINK Station Address

Sets the station address when the MECHATROLINK option is installed.

Note: All station addresses must be unique. Setting this parameter to 20 or 3F will trigger a Station Address Error (AEr) and turn on the "ERR" light.

No.	Parameter Name	Setting Range	Default
F6-20	MECHATROLINK Station Address	20 to 3F <1>	21

<1> Range shown is for the MECHATROLINK-II option (SI-T3). Range for MECHATROLINK-III option (SI-ET3) is: 03 to EF.

■ F6-21: MECHATROLINK Frame Size

Sets the frame size.

No.	Parameter Name	Setting Range	Default
F6-21	MECHATROLINK Frame Size	0, 1	0

Setting 0: 32-byte (MECHATROLINK-II option setting)
Value for MECHATROLINK-III option is: 64-byte

Setting 1: 17-byte (MECHATROLINK-II option setting)
Value for MECHATROLINK-III option is: 32-byte

■ F6-22: MECHATROLINK Link Speed

Sets the communication speed for a MECHATROLINK-II option card.

Note: This parameter is only available with a MECHATROLINK-II option card.

No.	Parameter Name	Setting Range	Default
F6-22	MECHATROLINK Link Speed	0, 1	0

Setting 0: 10 Mbps

Setting 1: 4 Mbps

■ F6-23: MECHATROLINK Monitor Selection (Code 0EH)

Sets MEMOBUS/Modbus register to monitor SEL_MON of INV_CTL and INV_CTL.

Setting byte 10 of INV_CTL to "0EH" enables the register set by F6-23.

Bytes 11 and 12 of the response data enable the register content set by F6-23.

No.	Parameter Name	Setting Range	Default
F6-23	MECHATROLINK Monitor Selection (Code 0EH)	0 to FFFFH	0H

■ F6-24: MECHATROLINK Monitor Selection (Code 0FH)

Sets MEMOBUS/Modbus register to monitor SEL_MON of INV_CTL and INV_CTL.
Setting byte 10 of INV_CTL to 0FH enables the register set by F6-24.
Bytes 11 and 12 of the response data enable the register content set by F6-24.

No.	Parameter Name	Setting Range	Default
F6-24	MECHATROLINK Monitor Selection (Code 0FH)	0 to FFFFH	0H

■ F6-25: Operation Selection at Watchdog Error (E5)

No.	Parameter Name	Setting Range	Default
F6-25	Operation Selection at Watchdog Error (E5)	0 to 3	1

Setting 0: Ramp to stop. Decelerate to stop using the deceleration time in C1-02.

Setting 1: Coast to stop

Setting 2: Fast Stop. Decelerate to stop using the deceleration time in C1-09.

Setting 3: Alarm only

■ F6-26: MECHATROLINK bUS Errors Detected

No.	Parameter Name	Setting Range	Default
F6-26	MECHATROLINK bUS Errors Detected	2 to 10	2

◆ PROFIBUS-DP Parameters

Parameters F6-30 through F6-32 and F7-60 through F7-79 set the drive to run on a PROFIBUS-DP network.

■ F6-30: PROFIBUS-DP Node Address

Sets the node address of a PROFIBUS-DP option card.

No.	Parameter Name	Setting Range	Default
F6-30	PROFIBUS-DP Node Address	0 to 125	0

■ F6-31: PROFIBUS-DP Clear Mode Selection

Determines the operation when a Clear Mode command is received.

No.	Parameter Name	Setting Range	Default
F6-31	PROFIBUS-DP Clear Mode Selection	0, 1	0

Setting 0: Reset
Resets the drive operation (frequency reference, inputs, outputs etc.).

Setting 1: Maintain the Previous State
Returns the drive status to the state prior to receiving the command.

■ F6-32: PROFIBUS-DP Data Format Selection

Selects the data format used for PROFIBUS-DP communication.

No.	Parameter Name	Setting Range	Default
F6-32	PROFIBUS-DP Data Format Selection	0 to 5	0

Setting 0: PPO-type Data Format

Setting 1: Conventional Data Format

Setting 2: PPO (w/bit 0)

Setting 3: PPO Type (Auto Enter)

Setting 4: Conventional (Auto Enter)

Setting 5: PPO (w/bit0, Auto Enter)

◆ CANopen Parameters

Parameters F6-35 and F6-36 set the drive to operate on a CANopen network.

■ F6-35: CANopen Node ID Selection

Selects the node ID of a CANopen option board.

No.	Parameter Name	Setting Range	Default
F6-35	CANopen Node ID Selection	0 to 126	0

■ F6-36: CANopen Communication Speed

Sets the communication speed for a CANopen option card.

No.	Parameter Name	Setting Range	Default
F6-36	CANopen Communication Speed	0 to 8	6

Setting 0: Auto detection
Setting 1: 10 kbps
Setting 2: 20 kbps
Setting 3: 50 kbps
Setting 4: 125 kbps
Setting 5: 250 kbps
Setting 6: 500 kbps
Setting 7: 800 kbps
Setting 8: 1 Mbps

◆ BACnet Parameters

Parameters F6-45 to F6-49 set the drive to operate on a BACnet network.

■ F6-45: BACnet Node Address

Sets the node address for a BACnet option card.

No.	Parameter Name	Setting Range	Default
F6-45	BACnet Node Address	0 to 127	1

■ F6-46: BACnet Baud Rate

Sets the node address for a BACnet option card.

No.	Parameter Name	Setting Range	Default
F6-46	BACnet Baud Rate	0 to 8	3

Setting 0: 1200
Setting 1: 2400
Setting 2: 4800
Setting 3: 9600
Setting 4: 19200
Setting 5: 38400
Setting 6: 57600
Setting 7: 76800
Setting 8: 115200

■ F6-47: Rx to Tx Wait Time

Sets the wait time between receiving and sending for BACnet.

No.	Parameter Name	Setting Range	Default
F6-47	Rx to Tx Wait Time	5 to 65 ms	5 ms

■ F6-48: BACnet Device Object Identifier 0

Sets the least significant word for BACnet.

No.	Parameter Name	Setting Range	Default
F6-48	BACnet Device Object Identifier 0	0 to FFFF	0

■ F6-49: BACnet Device Object Identifier 1

Sets the least significant word for BACnet.

No.	Parameter Name	Setting Range	Default
F6-49	BACnet Device Object Identifier 1	0 to 3F	0

◆ DeviceNet Parameters

Parameters F6-50 through F6-63 set the drive to operate on a DeviceNet network.

■ F6-50: DeviceNet MAC Address

Sets the MAC address for a DeviceNet option card.

No.	Parameter Name	Setting Range	Default
F6-50	DeviceNet MAC Address	0 to 64	64

■ F6-51: DeviceNet Communication Speed

Sets the communication speed for a DeviceNet option card.

To assign the baud rate for the drive from the upper controller, set F6-51 = 3.

To make the drive detect the network speed, set F6-51 = 4. The drive will automatically adjust itself after detecting the network speed.

No.	Parameter Name	Setting Range	Default
F6-51	DeviceNet Communication Speed	0 to 4	4

Setting 0: 125 kbps
Setting 1: 250 kbps
Setting 2: 500 kbps
Setting 3: Adjustable from network
Setting 4: Auto detection

■ F6-52: DeviceNet PCA Setting

Defines the format for data the drive receives from the DeviceNet master.

No.	Parameter Name	Setting Range	Default
F6-52	DeviceNet PCA Setting	0 to 255	21

■ F6-53: DeviceNet PPA Setting

Defines the format for data sent from the drive to the DeviceNet master.

No.	Parameter Name	Setting Range	Default
F6-53	DeviceNet PPA Setting	0 to 255	71

■ F6-54: DeviceNet Idle Mode Fault Detection

Determines whether the drive triggers an EF0 fault when no data is received from the master (e.g., when the master is idling).

No.	Parameter Name	Setting Range	Default
F6-54	DeviceNet Idle Mode Fault Detection	0 to 4	0

Setting 0: Enabled

Setting 1: Disabled, No Fault Detection

Setting 2: Vendor Specific

Setting 3: Forward

Setting 4: Reverse

■ F6-55: DeviceNet Baud Rate Monitor

Displays the baud rate currently being used for network communications. F6-55 is used only as a monitor.

No.	Parameter Name	Setting Range	Default
F6-55	DeviceNet Baud Rate Monitor	0 to 2 (read only)	0

Setting 0: 125 kbps
Setting 1: 250 kbps
Setting 2: 500 kbps

■ F6-56 to F6-61: DeviceNet Scaling Factors

These parameters define scaling factors for drive monitors in the DeviceNet Class ID 2AH - AC/DC Drive Object.

No.	Parameter Name	Setting Range	Default
F6-56	DeviceNet Speed Scaling	-15 to 15	0
F6-57	DeviceNet Current Scaling	-15 to 15	0
F6-58	DeviceNet Torque Scaling	-15 to 15	0
F6-59	DeviceNet Power Scaling	-15 to 15	0
F6-60	DeviceNet Voltage Scaling	-15 to 15	0
F6-61	DeviceNet Time Scaling	-15 to 15	0

Setting

The monitor value in the AC/DC Drive Object 2AH is calculated by:
AC/DC Drive Object 2AH Monitor = Drive Value × $2^{Scaling}$

Example:

If the drive output frequency monitor (U1-02) is 5.00 and the scaling is set to F6-56 = 6, then the value in the AC/DC Drive Object 2AH, Instance 1, Attribute 7 would be 500 × 2^6 = 32000.

■ F6-62: DeviceNet Heartbeat Interval

Sets the heartbeat interval for DeviceNet communications. A setting of 0 disables the heartbeat function.

No.	Parameter Name	Setting Range	Default
F6-62	DeviceNet Heartbeat Interval	0 to 10	0

■ F6-63: DeviceNet Network MAC ID

Displays the MAC ID assigned to the drive. F6-63 is used only as a monitor.

No.	Parameter Name	Setting Range	Default
F6-63	DeviceNet Network MAC ID	0 to 63 (read only)	0

■ F6-64 to F6-71: Dynamic Assembly Parameters (Reserved)

■ F7-01 to F7-04: IP Address 1 to 4

Sets the significant octet of network static IP address.

■ F7-05 to F7-08: Subnet Mask 1 to 4

Sets the significant octet of network static Subnet Mask.

■ F7-09 to F7-12: Gateway Address 1 to 4

Sets the significant octet of network Gateway address.

◆ Modbus TCP/IP Parameters

Parameters F7-01 through F7-15, U6-80 through U6-93, U6-98, and U6-99 set up the drive to operate on a Modbus TCP/IP network.

For details on parameter settings, refer to the YASKAWA AC Drive 1000-Series Option Modbus TCP/IP Installation Manual and Technical Manual.

◆ PROFINET Parameters

Parameters F7-01 through F7-15, F7-17 through F7-42, U6-80 through U6-93, U6-98, and U6-99 set up the drive to operate on a PROFINET network.

For details on parameter settings, refer to the YASKAWA AC Drive 1000-Series Option PROFINET Installation Manual and Technical Manual.

◆ EtherNet/IP Parameters

Parameters F7-01 through F7-15, F7-17 through F7-42, U6-80 through U6-93, U6-98, and U6-99 set up the drive to operate on an EtherNet/IP network.

For details on parameter settings, refer to the YASKAWA AC Drive 1000-Series Option EtherNet/IP Installation Manual and Technical Manual.

5.7 H: Terminal Functions

H parameters assign functions to the external terminals.

◆ H1: Multi-Function Digital Inputs

■ H1-01 to H1-08: Functions for Terminals S1 to S8

These parameters assign functions to the multi-function digital inputs. The various functions and settings are listed in *Table 5.36*.

No.	Parameter Name	Setting Range	Default
H1-01	Multi-Function Digital Input Terminal S1 Function Selection	1 to 9F	40 (F) <1> : Forward Run Command (2-Wire sequence)
H1-02	Multi-Function Digital Input Terminal S2 Function Selection	1 to 9F	41 (F) <1> : Reverse Run Command (2-Wire sequence)
H1-03	Multi-Function Digital Input Terminal S3 Function Selection	0 to 9F	24: External Fault (N.O., always detected, coast to stop)
H1-04	Multi-Function Digital Input Terminal S4 Function Selection	0 to 9F	14: Fault Reset
H1-05	Multi-Function Digital Input Terminal S5 Function Selection	0 to 9F	3 (0) <1> : Multi-Step Speed Reference 1
H1-06	Multi-Function Digital Input Terminal S6 Function Selection	0 to 9F	4 (3) <1> : Multi-Step Speed Reference 2
H1-07	Multi-Function Digital Input Terminal S7 Function Selection	0 to 9F	6 (4) <1> : Jog Reference Selection
H1-08	Multi-Function Digital Input Terminal S8 Function Selection	0 to 9F	8: External Baseblock Command

<1> Number appearing in parenthesis is the default value after performing a 3-Wire initialization (A1-03 = 3330).

Table 5.36 Multi-Function Digital Input Terminal Settings

Setting	Function	Page
0	3-Wire Sequence	299
1	LOCAL/REMOTE Selection	299
2	External Reference 1/2 Selection	300
3	Multi-Step Speed Reference 1	300
4	Multi-Step Speed Reference 2	
5	Multi-Step Speed Reference 3	
6	Jog reference Selection	300
7	Accel/Decel Time Selection 1	300
8	Baseblock Command (N.O.)	300
9	Baseblock Command (N.C.)	
A	Accel/Decel Ramp Hold	300
B	Drive Overheat Alarm (oH2)	301
C	Analog Terminal Input Selection	301
D	PG Encoder Disable	301
E	ASR integral reset	301
F	Through Mode	301
10	Up Command	301
11	Down Command	
12	Forward Jog	302
13	Reverse Jog	
14	Fault Reset	302
15	Fast Stop (N.O.)	302
16	Motor 2 Selection	303
17	Fast Stop (N.C.)	302
18	Timer Function Input	303
19	PID Disable	304
1A	Accel/Decel Time Selection 2	304
1B	Program Lockout	304
1E	Reference Sample Hold	304
20 to 2F	External Fault	304
30	PID Integral Reset	305
31	PID Integral Hold	305
32	Multi-Step Speed Reference 4	305
34	PID Soft Starter Cancel	305
35	PID Input Level Selection	305
40	Forward Run Command (2-Wire sequence)	305
41	Reverse Run Command (2-Wire sequence)	
42	Run Command (2-Wire sequence 2)	306
43	FWD/REV Command (2-Wire sequence 2)	
44	Offset Frequency 1	306
45	Offset Frequency 2	
46	Offset Frequency 3	
47	Node Setup	306
60	DC Injection Braking Command	306
61	External Speed Search Command 1	306
62	External Speed Search Command 2	306
63	Field Weakening	306
65	KEB Ride-Thru 1 (N.C.)	307
66	KEB Ride-Thru 1 (N.O.)	
67	Communications Test Mode	307
68	High Slip Braking (HSB)	307
6A	Drive Enabled	307
71	Speed/Torque Control Switch	307
72	Zero Servo	307
75	Up 2 Command	307
76	Down 2 Command	
77	ASR Gain Switch	308
78	External Torque Reference Polarity Inversion	308

Setting	Function	Page
7A	KEB Ride-Thru 2 (N.C.)	308
7B	KEB Ride-Thru 2 (N.O.)	
7C	Short Circuit Braking (N.O.)	308
7D	Short Circuit Braking (N.C.)	

Setting	Function	Page
7E	Forward/Reverse Detection	309
7F	PID Bi-directional Enable (Reserved)	309
90 to 97	DriveWorksEZ Digital Input 1 to 8	309
9F	DriveWorksEZ Disabled	309

Setting 0: 3-Wire Sequence

The digital input programmed for 3-Wire control becomes the forward/reverse directional input, S1 becomes the Run command input, and S2 becomes the Stop command input.

The drive starts the motor when the input S1 set for the Run command closes for longer than 2 ms. The drive stops the operation when the Stop input S2 is released. When the digital input programmed for a forward/reverse operation is open, the drive is set for forward operation. When the digital input is closed, the drive is set for reverse operation.

Note: Input the Run and Stop commands via S1 and S2 when selecting a 3-Wire sequence.

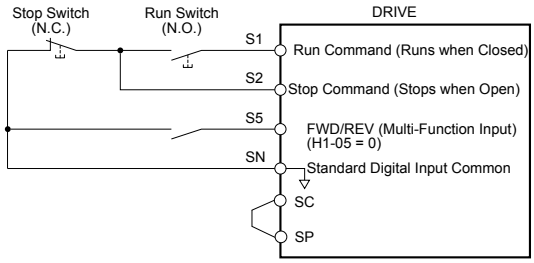

Figure 5.58 3-Wire Sequence Wiring Diagram

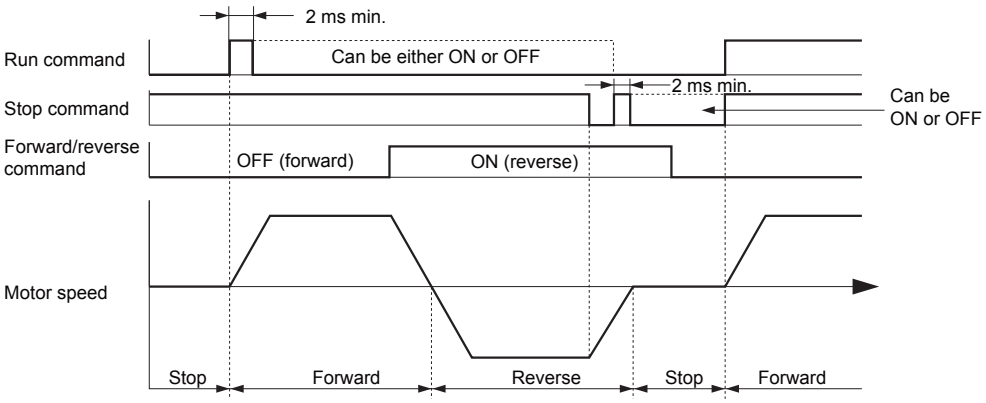

Figure 5.59 3-Wire Sequence

Note:
1. The Run command must be closed for more than 2 ms.
2. If the Run command is active at power up and b1-17 = 0 (Run command at power up not accepted), the Run LED will flash to indicate that protective functions are operating. If required by the application, set b1-17 to 1 to automatically issue the Run command upon drive power up.

WARNING! *Sudden Movement Hazard. Ensure start/stop and safety circuits are wired properly and in the correct state before applying power to the drive. Failure to comply could result in death or serious injury from moving equipment.*

WARNING! *Sudden Movement Hazard. The drive may start unexpectedly in reverse direction after power up if it is wired for 3-Wire sequence but set up for 2-Wire sequence (default). Make sure b1-17 is set to "0" (drive does not accept a Run command active at power up). When initializing the drive use 3-Wire initialization. Failure to comply could result in death or serious injury from moving equipment.*

Setting 1: LOCAL/REMOTE Selection

This setting allows the input terminal to determine if the drive will run in LOCAL mode or REMOTE mode.

Status	Description
Closed	LOCAL: Frequency reference and Run command are input from the digital operator.
Open	REMOTE: Frequency reference and Run command are input from an external reference that has been selected in accordance with settings b1-01 and b1-02 to b1-15 and b1-16.

Note:
1. The LO/RE key on the digital operator is disabled when one of the multi-function input terminals is set to for LOCAL/REMOTE.
2. When the drive is set to LOCAL, the LO/RE LED will light.

3. The default setting of the drive does not allow switching between LOCAL and REMOTE during run. To allow the drive to switch between LOCAL and REMOTE during run, ***Refer to b1-07: LOCAL/REMOTE Run Selection on page 212***.

Setting 2: External Reference 1/2 Selection

This function switches the Run command and frequency reference source between External reference 1 and 2 if the drive is in the REMOTE mode.

Status	Description
Open	External reference 1 is used (defined by parameters b1-01 and b1-02)
Closed	External reference 2 is used (defined by parameters b1-15 and b1-16)

Note: Default drive settings do not allow switching between External reference 1 and 2 during run. ***Refer to b1-07: LOCAL/REMOTE Run Selection on page 212*** if this feature is required by the application.

Setting 3 to 5: Multi-Step Speed Reference 1 to 3

Switches multi-step speed frequency references d1-01 to d1-08 by digital inputs. ***Refer to d1: Frequency Reference on page 255*** for details.

Setting 6: Jog Reference Selection

The Jog frequency set in parameter d1-17 becomes the frequency reference when the input terminal closes. ***Refer to d1: Frequency Reference on page 255*** for details.

Setting 7: Accel/Decel Time Selection 1

Switches between accel/decel times 1 (C1-01 and C1-02) and 2 (C1-03 and C1-04). ***Refer to C1-01 to C1-08: Accel, Decel Times 1 to 4 on page 239*** for details.

Setting 8, 9: Baseblock Command (N.O., N.C.)

When the drive receives a baseblock command, the output transistors stop switching, the motor coasts to stop, and a bb alarm flashes on the digital operator to indicate baseblock. When baseblock ends while a Run command is active, the drive performs Speed Search to restart the motor.

DIgital Input Function	Drive Operation	
	Input Open	Input Closed
Setting 8 (N.O.)	Normal operation	Baseblock (Interrupt output)
Setting 9 (N.C.)	Baseblock (Interrupt output)	Normal operation

WARNING! *Sudden Movement Hazard. When using a mechanical holding brake with the drive in a lifting application, close the brake when the drive output is cut off by a baseblock command triggered by one of the input terminals. Failure to comply will result in a slipping load from the motor suddenly coasting when the baseblock command is entered and may cause serious injury or death.*

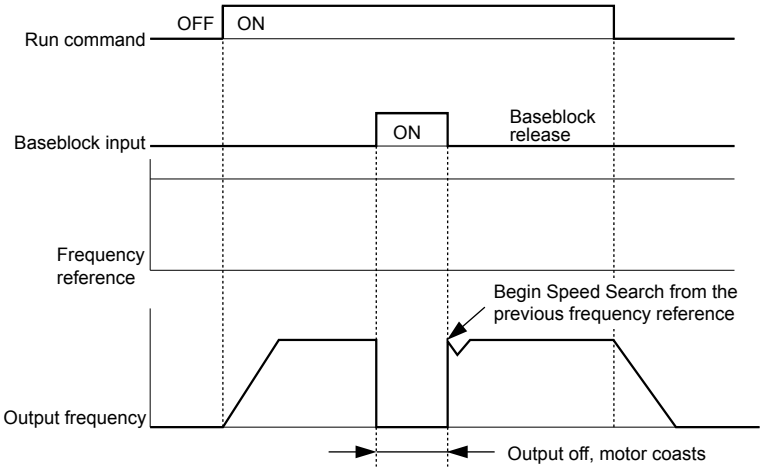

Figure 5.60 Baseblock Operation During Run

Setting A: Accel/Decel Ramp Hold

When the digital input programmed for the Accel/decel ramp hold function closes, the drive locks (holds) the output frequency. Acceleration or deceleration resumes when the input is reopened.

If the Accel/decel ramp hold function is enabled (d4-01 = 1), the drive saves the output frequency to memory when the Ramp Hold input is closed. When the drive is restarted after stop or after power supply interruption, the saved output frequency becomes the frequency reference (provided that the Accel/decel ramp hold input is still closed). ***Refer to d4-01: Frequency Reference Hold Function Selection on page 259*** for details.

Setting B: Drive Overheat Alarm (oH2)

Triggers an oH2 alarm when the contact closes. Drive operation is not affected because this is an alarm.

Setting C: Analog Terminal Input Selection (Terminal A1, A2, A3)

When closed, the terminals specified in H3-14 are enabled. When open, the drive disregards the input signal to the analog terminals.

Setting D: PG Encoder Disable

When closed, the drive disregards PG feedback from the motor when using V/f Control with PG. When the terminal is reopened, the drive resumes using PG feedback to control motor speed.

Setting E: ASR Integral Reset

Switches between PI control and P control by resetting the integral value. Integral operation is disabled when the terminal is closed and the drive uses P control. PI control resumes when the terminal opens.

Setting F: Through Mode

Select this setting when the terminal is not used or when using the terminal in pass-through mode.

When set to F, an input does not trigger any function in the drive. Setting F, however, still allows the input status to be read out by a PLC via a communication option or MEMOBUS/Modbus communications.

Setting 10, 11: Up/Down Function

The Up/Down function allows the frequency reference to be set by two push buttons when one digital input is programmed as the Up input (H1-□□= 10) to increase the frequency reference and the other digital input is programmed as the Down input (H1-□□= 11) to decrease the frequency reference.

The Up/Down function takes priority over the frequency references from the digital operator, the analog inputs, and the pulse input (b1-01 = 0, 1, 4). When using the Up/Down function, references provided by these sources will be disregarded.

The inputs operate as shown in ***Table 5.37***:

Table 5.37 Up, Down Command

Status		Drive Operation
Up (10)	Down (11)	
Open	Open	Hold current frequency reference
Closed	Open	Increase frequency reference
Open	Closed	Decrease frequency reference
Closed	Closed	Hold current frequency reference

Note:
1. An oPE03 alarm occurs when only one of the Up/Down functions is programmed to a digital input.
2. An oPE03 alarm occurs when the Up/Down function is assigned to the terminals and a different digital input is programmed for the Accel/decel ramp hold function. For more information on alarms, ***Refer to Drive Alarms, Faults, and Errors on page 399***.
3. The Up/Down function can only be used for External reference 1 for parameter b1-01. Consider this when using Up/Down and the external reference parameter b1-15 switching command (H1-□□ = 2).

Using the Up/Down Function with Frequency Reference Hold (d4-01)

- If the frequency reference hold function is disabled (d4-01 = 0), the Up/Down frequency reference will be reset to 0 when the Run command is cleared or the power is cycled.
- When d4-01 = 1, the drive will save the frequency reference set by the Up/Down function. When the Run command or the power is cycled, the drive will restart with the saved reference value. Close the Up or Down input without an active Run command to reset the saved value. ***Refer to d4-01: Frequency Reference Hold Function Selection on page 259***.

Using the Up/Down Function with Frequency Reference Limits

Parameter d2-01 determines the upper frequency reference limit.

The value for the lower frequency reference limit depends on the parameter d4-10 setting. This value can be set by an analog input or parameter d2-02. ***Refer to d4-10: Up/Down Frequency Reference Limit Selection on page 263*** for details. When a Run command is applied, the lower limits function as follows:

- If the lower limit is set by d2-02 only, the drive accelerates to this limit as soon as a Run command is entered.
- If the lower limit is determined by an analog input only, the drive accelerates to the limit when both the Run command and an Up or Down command are active. The drive will not start running if only the Run command is active.

- If the lower limit is set by both an analog input and d2-02, and the analog limit is higher than the d2-02 value, the drive accelerates to the d2-02 value when a Run command is input. When the d2-02 value is reached, the drive accelerates to the analog limit only if an Up or Down command is set.

Figure 5.61 shows an Up/Down function example with a lower frequency reference limit set by d2-02, and the frequency reference hold function both enabled (d4-01 = 1) and disabled (d4-01 = 0).

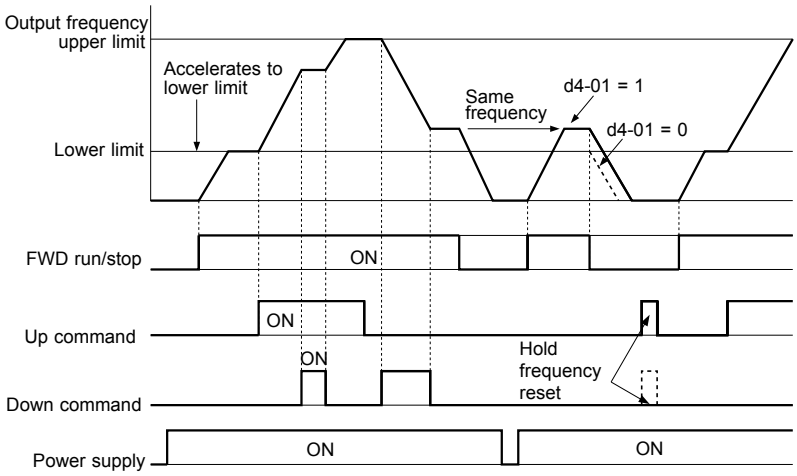

Figure 5.61 Up/Down Command Operation

Setting 12, 13: Forward Jog, Reverse Jog

Digital inputs programmed as Forward Jog (H1-□□ = 12) and Reverse Jog (H1-□□ = 13) will be Jog inputs that do not require a Run command. Closing the terminal set for Forward Jog input will cause the drive to ramp to the Jog frequency reference (d1-17) in the forward direction. The Reverse Jog will cause the same action in the reverse direction. The Forward Jog and Reverse Jog command can be set independently.

Note: The Forward Jog and Reverse Jog commands override all other frequency references. However, if the drive is set to prohibit reverse rotation (b1-04 = 1), activating Reverse Jog will have no effect. Inputting both the Forward Jog and Reverse Jog are simultaneously for 500 ms or longer will trigger an alarm will and the drive will ramp to stop.

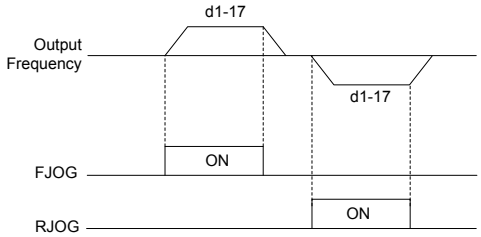

Figure 5.62 FJOG/RJOG Operation

Setting 14: Fault Reset

When the drive detects a fault condition, the fault output contact closes, the drive output shuts off, and the motor coasts to stop (specific stopping methods can be selected for some faults such as L1-04 for motor overheat). After removing the Run command, clear the fault either by pressing the RESET key on the digital operator or closing a digital input configured as a Fault Reset (H1-□□ = 14).

Note: Remove the Run command prior to resetting a fault. Fault Reset commands are ignored while the Run command is present.

Setting 15, 17: Fast Stop (N.O., N.C.)

The Fast Stop function operates similar to an emergency stop input to the drive. If a Fast Stop command is input while the drive is running, the drive decelerates to a stop in the deceleration time set to C1-09 (*Refer to C1-09: Fast Stop Time on page 240*). The drive can only be restarted after bringing the drive to a complete stop, turning off the Fast Stop input, and switching off the Run command.

- To trigger the Fast Stop function with an N.O. switch, set H1-□□ = 15.
- To trigger the Fast Stop function with an N.C. switch, set H1-□□ = 17.

Figure 5.63 shows an operation example of Fast Stop.

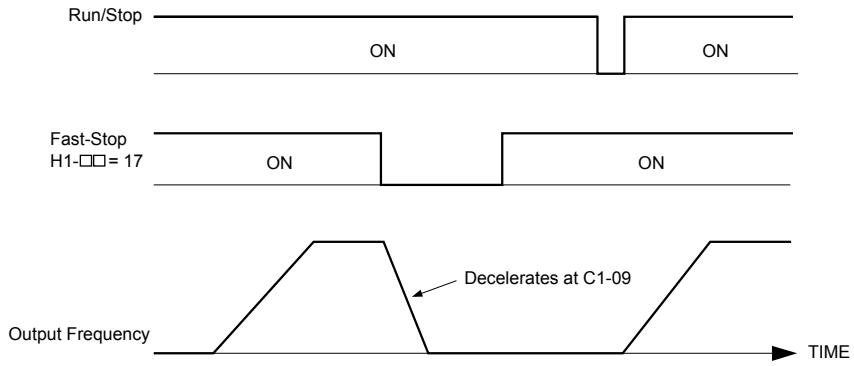

Figure 5.63 Fast Stop Sequence

NOTICE: *Rapid deceleration can trigger an overvoltage fault. When faulted, the drive output shuts off, and the motor coasts. To avoid this uncontrolled motor state and to ensure that the motor stops quickly and safely, set an appropriate Fast Stop time to C1-09.*

Setting 16: Motor 2 Selection

The drive has the capability to control two induction motors independently. A second motor may be selected using a multi-function digital input as shown in ***Figure 5.64***.

Note: The motor 2 selection function cannot be used with PM motors.

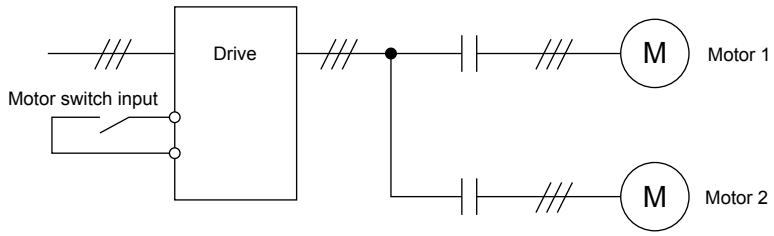

Figure 5.64 Motor Selection

When switching between motor 1 and motor 2, the parameters used to control those motors also change. Below, ***Table 5.38*** lists the parameters that correspond to each motor:

Table 5.38 Parameters for Switching Between Two Motors

No.	Setting 16 Open (Motor 1)	⇒	Setting 16 Closed (Motor 2)
C1-□□: Acceleration/Deceleration Time	C1-01 to C1-04	⇒	C1-05 to C1-08
C3-□□ : Motor Slip Compensation	C3-01 to C3-04	⇒	C3-21 to C3-24
C4-□□: Motor Torque Compensation	C4-01	⇒	C4-07
C5-□□: Speed Control (ASR)	C5-01 to C5-08, C5-12, C5-17, C5-18	⇒	C5-21 to C5-28, C5-32, C5-37, C5-38
E1-□□, E3-□□: V/f Pattern E2-□□, E4-□□: Motor Parameters	E1-□□, E2-□□	⇒	E3-□□ to E4-□□
F1-□□ (PG Constant)	F1-01 to F1-21	⇒	F1-02 to F1-04, F1-08 to F1-11, F1-14, F1-31 to F1-37

Note:
1. When using 2 motors, the motor overload protection selection (oL1) set to L1-01 applies to both motor 1 and motor 2.
2. Attempting to switch between motor 1 and motor 2 during run will trigger the rUn alarm.
3. There is a 500 ms delay when switching during CLV control and a 200 ms delay for all other control modes. Wait for at least these times after switching the motor before issuing the next Run command.
4. The motor 2 selection function cannot be used with PM motors.

If a digital output is programmed for “Motor 2 selection” (H2-01, H2-02, or H2-03 = 1C), the output is closed when motor 2 is selected.

Setting 18: Timer Function Input

This setting configures a digital input terminal as the input for the timer function. Use this setting combination with the timer function output (H2-□□ = 12). ***Refer to b4: Timer Function on page 222*** for details.

Setting 19: PID Disable

Close a digital input to indefinitely disable the PID function. When the input is released, the drive resumes PID operation. *Refer to PID Block Diagram on page 226*.

Setting 1A: Accel/Decel Time Selection 2

Selects accel/decel times 1 to 4 in combination with the Accel/decel time selection 1 command. *Refer to C1-01 to C1-08: Accel, Decel Times 1 to 4 on page 239* for details.

Setting 1B: Program Lockout

Parameter values cannot be changed when an input is programmed for Program Lockout and the input is open. It is still possible, however, to view and monitor parameter settings.

Setting 1E: Reference Sample Hold

This function allows the user to sample an analog frequency reference signal being input to terminal A1, A2, or A3 and hold the frequency reference at the sampled level. When the Analog Frequency Reference Sample/Hold function is held for at least 100 ms, the drive reads the analog input and changes the frequency reference to the newly sampled speed as illustrated in *Figure 5.65*.

When the power is shut off and the sampled analog frequency reference is cleared, the frequency reference is reset to 0.

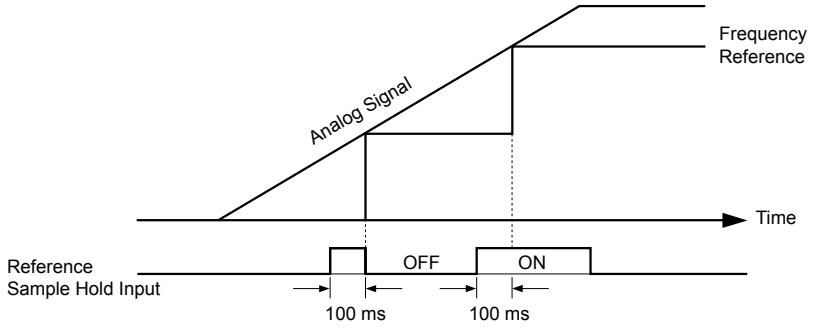

Figure 5.65 Analog Frequency Reference Sample/Hold

An oPE03 error will occur when one of the following functions is used simultaneously with the Analog frequency reference sample/hold command:

- Hold accel/decel stop (setting: A)
- Up command, Down command (setting: 10, 11)
- Offset frequency (setting: 44 to 46)
- Up or Down functions (setting: 75, 76)

Setting 20 to 2F: External Fault

The External fault command stops the drive when problems occur with external devices.

To use the External fault command, set one of the multi-function digital inputs to a value between 20 and 2F. The digital operator will display EF□ where □ is the number of the terminal to which the external fault signal is assigned.

For example, if an external fault signal is input to terminal S3, “EF3” will be displayed.

Select the value to be set in H1-□□ from a combination of any of the following three conditions:

- Signal input level from peripheral devices (N.O., N.C.)
- External fault detection method
- Operation after external fault detection

Table 5.39 shows the relationship between the conditions and the value set to H1-□□:

Terminal statuses, detection conditions, and stopping methods marked with an “O” are applicable to the corresponding settings.

Table 5.39 Stopping Method for External Fault

Setting	Terminal Status <1>		Detection Conditions <2>		Stopping Method			
	N.O.	N.C.	Always Detected	Detected during Run only	Ramp to Stop (fault)	Coast to Stop (fault)	Fast Stop (fault)	Alarm Only (continue running)
20	O		O		O			
21		O	O		O			
22	O			O	O			
23		O		O	O			
24	O		O			O		
25		O	O			O		
26	O			O		O		
27		O		O		O		
28	O		O				O	
29		O	O				O	
2A	O			O			O	
2B		O		O			O	
2C	O		O					O
2D		O	O					O
2E	O			O				O
2F		O		O				O

<1> Determine the terminal status for each fault, i.e., whether the terminal is normally open or normally closed.

<2> Determine whether detection for each fault should be enabled only during run or always detected.

Setting 30: PID Integral Reset

Configuring one of the digital inputs for PID integral reset (H1-□□ = 30) resets the value of the integral component in PID control to 0 when the terminal is closed. ***Refer to PID Block Diagram on page 226*** for more details.

Setting 31: PID Integral Hold

Configuring a digital input for Integral Hold (H1-□□ = 31) locks the value of the integral component of the PID control as long as the input is active. The PID controller resumes integral operation from the hold value as soon as the integral hold input is released. ***Refer to PID Block Diagram on page 226*** for more information on this function.

Setting 32: Multi-Step Speed Reference 4

Selects the multi-step speeds d1-09 to d1-16 in combination with the input terminal set for Multi-Step Speed 1, 2 and 3. ***Refer to d1-01 to d1-17: Frequency Reference 1 to 16 and Jog Frequency Reference on page 255***.

Setting 34: PID Soft Starter Cancel

A digital input configured as a PID soft starter cancel input (H1-□□ = 34) enables or disables the PID soft starter and cancels the PID accel/decel time (b5-17). ***Refer to PID Block Diagram on page 226***.

Setting 35: PID Input Level Selection

Allows an input terminal to switch the sign of the PID input. ***Refer to PID Block Diagram on page 226*** for details.

Setting 40, 41: Forward Run, Reverse Run Command for 2-Wire Sequence

Configures the drive for a 2-Wire sequence.

When an input terminal set to 40 closes, the drive operates in the forward direction. When an input set for 41 closes, the drive operates in reverse. Closing both inputs simultaneously will result in an external fault.

Note:
1. This function cannot be used simultaneously with settings 42 and 43.
2. The same functions are assigned to terminals S1 and S2 when the drive is initialized for 2-Wire sequence.

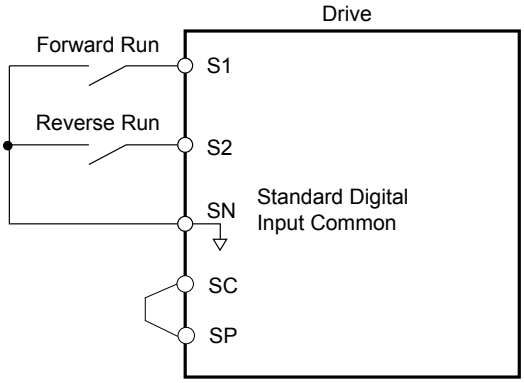

Figure 5.66 Example Wiring Diagram for 2-Wire Sequence

Setting 42, 43: Run and Direction Command for 2-Wire Sequence 2

Sets the drive for 2-Wire sequence 2.

When an input terminal programmed for 42 closes, the drive will operate in the selected direction. The drive will stop when the input opens.

The input programmed for 43 selects the direction. If the input is open, forward direction is selected. If the input is closed, reverse direction is selected.

Note: This function cannot be used simultaneously with settings 40 and 41.

Setting 44, 45, 46: Offset Frequency 1, 2, 3

These inputs add offset frequencies d7-01, d7-02, and d7-03 to the frequency reference. ***Refer to d7-01 to d7-03: Offset Frequency 1 to 3 on page 269*** for details.

Setting 47: Node Setup

If the SI-S3 option card is connected, closing this terminal sets a node address for operation on a CANopen network.

Setting 60: DC Injection Braking Command

DC Injection Braking is activated when a DC Injection Braking command is input while the drive is stopped. DC Injection Braking is released when a Run command or a Jog command is input. ***Refer to b2: DC Injection Braking and Short Circuit Braking on page 213*** for details on setting up the DC Injection Braking function.

The diagram below illustrates DC Injection Braking:

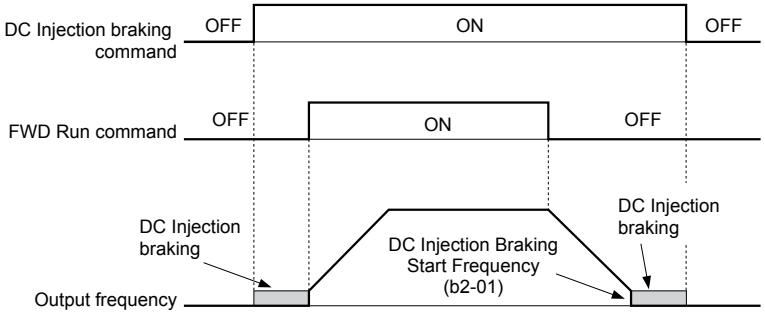

Figure 5.67 DC Injection Braking Input Timing Diagram

Setting 61, 62: External Speed Search Command 1, 2

These input functions enable Speed Search even if parameter b3-01 = 0 (no Speed Search at start). ***Refer to Speed Search Activation on page 218*** for details on how to use the input signals. ***Refer to b3: Speed Search on page 216*** for more about Speed Search.

Note: Simultaneously assigning Speed Search 1 and Speed Search 2 to the input terminals will trigger an oPE03 error.

Setting 63: Field Weakening

Enabled in V/f Control. When this input is closed, Field Weakening is performed. For details, see ***d6: Field Weakening and Field Forcing***.

Setting 65, 66: KEB Ride-Thru 1 (N.C.), 2 (N.O.)

Enables the KEB Ride-Thru function selected in parameter L2-29. *Refer to KEB Ride-Thru Function on page 339* for more information on this function.

DIgital Input Function	Drive Operation	
	Input Open	Input Closed
Setting 65 (N.C.)	KEB Ride-Thru Deceleration	Normal operation
Setting 66 (N.O.)	Normal operation	KEB Ride-Thru Deceleration

Note: Simultaneously assigning KEB Ride-Thru 1 and KEB Ride-Thru 2 to the input terminals will trigger an oPE03 error.

Setting 67: Communication Test Mode

The drive has a built-in function to self-diagnose serial communications operation. The test involves wiring the send and receive terminals of the RS-485/422 port together. The drive transmits data and then confirms that the communications are received normally. *Refer to Self-Diagnostics on page 734* for details on how to use this function.

Setting 68: High Slip Braking (HSB)

Closing an input programmed for this function triggers High Slip Braking (available only in V/f and V/f w/PG control modes). After starting HSB, bring the drive to a complete stop and remove the HSB command before restarting. *Refer to n3: High Slip Braking (HSB) and Overexcitation Braking on page 368*.

Setting 6A: Drive Enable

A digital input configured as a “Drive enable” (H1-□□ = 6A) will prevent the drive from executing a Run command until the input is closed. When the input is open, the digital operator will display “dnE” to indicate that the drive is disabled.

If a Run command is enabled before the terminal set for “Drive enable” closes, then the drive will not run until the Run command is cycled (i.e., a new Run command is required). If the input is opened while the drive is running, the drive will stop according to the stop method set to b1-03 (*Refer to b1-03: Stopping Method Selection on page 207*).

Setting 71: Speed/Torque Control Switch

Switches the drive between Torque Control and Speed Control. Torque Control is enabled when the terminal is closed, and Speed Control is enabled when the terminal is open. Set parameter d5-01 to 0 when using this function. *Refer to d5: Torque Control on page 264* and *Switching Between Torque and Speed Control* on page *266*.

Setting 72: Zero Servo

Activates the Zero Servo function to lock the rotor at a certain position. *Refer to b9: Zero Servo on page 237* for details.

Setting 75, 76: Up 2/Down 2 Function

The Up/Down 2 function adds a bias to the frequency reference. The input programmed for 75 will increase the bias and the input programmed for 76 will decrease the bias. *Table 5.40* explains how the Up/Down 2 function works depending on the frequency reference source and parameters d4-01, d4-03, and d4-05. *Refer to d4: Frequency Reference Hold and Up/Down 2 Function on page 259* for detailed explanations of these and other Up/Down 2 related parameters.

Note:
1. The Up/Down 2 functions must be set as a pair.
2. When using the Up/Down 2 function, set appropriate bias limit values to parameters d4-08 and d4-09.

Table 5.40 Up/Down 2 Operations

Condition	Freq. Ref. Source	d4-03	d4-05	d4-01	Operation	Frequency Saved
1	Multi-Step Speed Reference	0	0	0	• Accelerates (increases the bias) while the Up 2 terminal is closed. • Decelerates (decreases the bias) while Down 2 is closed. • Holds output frequency (holds the bias) when no Up 2 or Down 2 input or both active. • Resets the bias when the reference changes. • Operates with the frequency reference in all other situations.	Not saved
2				1		If the bias and frequency reference are constant for 5 s, the bias is added to the active frequency reference and reset afterwards.
3			1	--	• Accelerates (increases the bias) while the Up 2 terminal is closed. • Decelerates (decreases the bias) while Down 2 is closed. • Otherwise operates at the frequency reference.	Not saved

Condition	Freq. Ref. Source	d4-03	d4-05	d4-01	Operation	Frequency Saved
4	Multi-Step Speed Reference	Value other than 0	--	0	• When the Up 2 is enabled, the drive accelerates to the frequency reference plus d4-03 (bias is increased for d4-03). • When Down 2 is enabled, the drive decelerates to the frequency reference minus d4-03 (bias is decreased for d4-03). • Holds output frequency (holds the bias) when neither Up/Down 2 inputs are active or both inputs are active. • Resets the bias when the reference changes. • Operates with the frequency reference in all other situations.	Not saved
5				1		If the bias and frequency reference are constant for 5 s, the bias is added to the active frequency reference and reset afterwards.
6	Other (analog comm., etc.)	0	0	0	• Accelerates (increases the bias) while the Up 2 terminal is closed. • Decelerates (decreases the bias) while Down 2 is closed. • Holds output frequency (holds the bias) when neither Up/Down 2 inputs are active or both inputs are active. • If the frequency reference changes for more than the time set to d4-07 during accel/decel, bias value is held until the output frequency meets the reference (speed agree).	Not saved
7				1		If the bias is constant for 5 s, it is saved to parameter d4-06. The frequency reference cannot be overwritten, so only the bias is saved.
8	Other (analog comm, etc.)	0	1	--	• Accelerates (increases the bias) while the Up 2 terminal is closed. • Decelerates (decreases the bias) while Down 2 is closed. • Otherwise operates at the frequency reference	Not saved
9		Value other than 0	--	0	• When Up 2 is enabled, drive accelerates to the frequency reference plus d4-03 (increases the bias for d4-03). • When Down 2 is enabled, drive decelerates to the frequency reference minus d4-03 (decreases the bias for d4-03). • If the frequency reference changes for more than d4-07 during accel/decel, bias value is held until the output frequency meets the reference (speed agree).	Not saved
10				1		If the bias is constant for 5 s, it is saved to parameter d4-06. The frequency reference cannot be overwritten, so only the bias is saved.

Setting 77: ASR Gain Switch

Switches the ASR gain between the values set to C5-01 and C5-03. The gain set to C5-03 is enabled when the terminal is closed, and C5-01 is enabled when the terminal reopens. ***Refer to C5-01, C5-03/C5-02, C5-04: ASR Proportional Gain 1, 2/ ASR Integral Time 1, 2 on page 248*** for a more detailed description.

Setting 78: External Torque Reference Polarity Inversion

Reverses the direction of the torque reference when the terminal closes. ***Refer to d5: Torque Control on page 264*** and ***Setting the Torque Reference, Speed Limit, and Torque Compensation Values*** on page ***264*** for details.

Setting 7A, 7B: KEB Ride-Thru 2 (N.C., N.O.)

An input terminal set to 7A or 7B can trigger Single Drive KEB Ride-Thru during deceleration. L2-29 is disregarded if this is enabled. ***Refer to KEB Ride-Thru Function on page 339*** for details.

Digital Input Function	Drive Operation	
	Input Open	Input Closed
Setting 7A (N.C.)	Single Drive KEB Ride-Thru 2	Normal operation
Setting 7B (N.O.)	Normal operation	Single Drive KEB Ride-Thru 2

Note: Simultaneously assigning KEB Ride-Thru 1 and KEB Ride-Thru 2 to the input terminals will trigger an oPE03 error.

Setting 7C, 7D: Short Circuit Braking (N.O., N.C.) (OLV/PM, AOLV/PM)

Activates Short Circuit Braking in OLV control modes for PM motors. By linking all three phases of a PM motor, Short Circuit Braking creates a braking torque to stop a rotating motor or prevent a motor from coasting due to external forces (such as the windmill effect in fan applications). Parameter b2-18 limits the current during Short Circuit Braking.

DIgital Input Function	Drive Operation	
	Input Open	Input Closed
Setting 7C (N.O.)	Normal operation	Short Circuit Braking
Setting 7D (N.C.)	Short-Circuit Braking	Normal operation

Setting 7E: Forward/Reverse Detection

Determines the motor rotation direction for V/f Control with Simple PG feedback or V/f Control with PG feedback when F1-21 (PG 1 Signal Selection) or F1-37 (PG 2 Signal Selection) are set to 0 (A Pulse Detection).

If the input is open, the speed feedback signal is considered to be forward. If the input is closed, it is considered to be reverse. *Refer to H6: Pulse Train Input/Output on page 328* for details.

Setting 7F: PID Bi-directional Enable

Setting 7F is reserved.

Setting 90 to 97: DriveWorksEZ Digital Input 1 to 8

These settings are for digital input functions used in DriveWorksEZ. Changing these settings is not typically required.

Setting 9F: DriveWorksEZ Disable

This function is used to enable or disable a DriveWorksEZ program in the drive. An input programmed for this function is effective only if A1-07 = 2.

Status	Description
Open	DriveWorksEZ enabled
Closed	DriveWorksEZ disabled

◆ H2: Multi-Function Digital Outputs

■ H2-01 to H2-03: Terminal M1-M2, M3-M4, and M5-M6 Function Selection

The drive has three multi-function output terminals. *Table 5.41* lists the functions available for theses terminals using H2-01, H2-02, and H2-03.

No.	Parameter Name	Setting Range	Default
H2-01	Terminal M1-M2 Function Selection (relay)	0 to 192	0: During run
H2-02	Terminal M3-M4 Function Selection (relay)	0 to 192	1: Zero Speed
H2-03	Terminal M5-M6 Function Selection (relay)	0 to 192	2: Speed agree 1

Table 5.41 Multi-Function Digital Output Terminal Settings

Setting	Function	Page	Setting	Function	Page
0	During Run	310	12	Timer Output	314
1	Zero Speed	310	13	Speed Agree 2	314
2	Speed Agree 1	311	14	User-Set Speed Agree 2	314
3	User-Set Speed Agree 1	311	15	Frequency Detection 3	315
4	Frequency Detection 1	311	16	Frequency Detection 4	315
5	Frequency Detection 2	312	17	Torque Detection 1 (N.C.)	313
6	Drive Ready	312	18	Torque Detection 2 (N.O.)	
7	DC Bus Undervoltage	313	19	Torque Detection 2 (N.C.)	313
8	During Baseblock (N.O.)	313	1A	During Reverse	316
9	Frequency Reference Source	313	1B	During Baseblock (N.C.)	316
A	Run Command Source	313	1C	Motor 2 Selection	316
B	Torque Detection 1 (N.O.)	313	1D	During regeneration	316
C	Frequency Reference Loss	313	1E	Restart Enabled	316
D <1>	Braking Resistor Fault	313	1F	Motor Overload Alarm (oL1)	317
E	Fault	313	20	Drive Overheat Pre-Alarm (oH)	317
F	Through Mode	314	22	Mechanical Weakening Detection	317
10	Minor Fault	314	2F	Maintenance Period	317
11	Fault Reset Command Active	314	30	During Torque Limit	317

Setting	Function	Page
31	During Speed Limit	317
32	During Speed Limit in Torque Control	317
33	Zero Servo Complete	317
37	During Frequency Output	317
38	Drive Enabled	318
39	Watt Hour Pulse Output	318
3C	LOCAL/REMOTE Status	318
3D	During Speed Search	318
3E	PID Feedback Low	318
3F	PID Feedback High	318
4A	During KEB Operation	318
4B	During Short Circuit Braking	318
4C	During Fast Stop	318

Setting	Function	Page
4D	oH Pre-Alarm Time Limit	318
4E <2>	Braking Transistor Fault (rr)	318
4F <2>	Braking Resistor Overheat (rH)	318
60	Internal Cooling Fan Alarm	319
61	Rotor Position Detection Completed	319
62 <1>	MEMOBUS Register 1 (Selected with H2-07 and H2-08)	319
63 <1>	MEMOBUS Register 2 (Selected with H2-09 and H2-10)	319
90	DriveWorksEZ Digital Output 1	319
91	DriveWorksEZ Digital Output 2	
92	DriveWorksEZ Digital Output 3	
100 to 192	Functions 0 to 92 with Inverse Output	319

<1> Not available in models 4A0930 and 4A1200.

<2> Not available in models 2A0169 to 2A0415 and 4A0088 to 4A1200.

Setting 0: During Run

Output closes when the drive is outputting a voltage.

Status	Description
Open	Drive is stopped.
Closed	A Run command is input or the drive is in deceleration or DC injection.

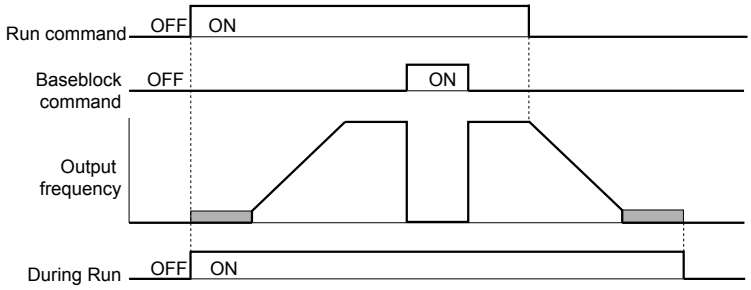

Figure 5.68 During Run Time Chart

Setting 1: Zero Speed

Terminal closes when the output frequency or motor speed (CLV, CLV/PM) becomes less than the minimum output frequency set to E1-09 or b2-01.

Status	Description
Open	Output frequency meets or exceeds the minimum output frequency set to E1-09 or b2-01
Closed	Output frequency becomes less than the minimum output frequency set to E1-09 or b2-01

Note: When using CLV or CLV/PM control modes, the output terminal closes when the motor speed becomes less than the zero speed level set for b2-01. In all other control modes, the output terminal closes when the output frequency becomes less than the minimum output frequency set for E1-09.

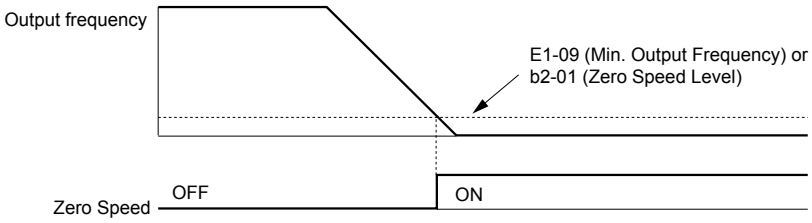

Figure 5.69 Zero-Speed Time Chart

Setting 2: Speed Agree 1 (f_{ref}/f_{out} Agree 1)

Closes when the actual output frequency or motor speed (CLV, CLV/PM) is within the Speed Agree Width (L4-02) of the current frequency reference regardless of the direction.

Status	Description
Open	Output frequency or motor speed is outside the range of frequency reference ±L4-04.
Closed	Output frequency or motor speed is within the range of frequency reference ±L4-02.

Note: Detection works in forward and reverse.

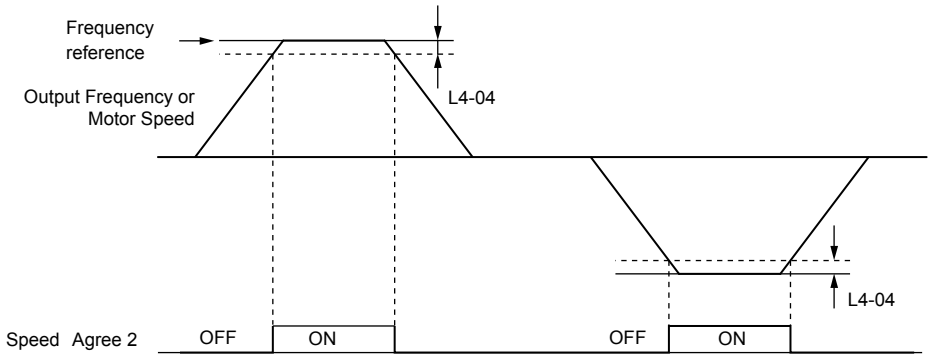

Figure 5.70 Speed Agree 1 Time Chart

Refer to L4-01, L4-02: Speed Agree Detection Level and Detection Width on page 352 for more details.

Setting 3: User-Set Speed Agree 1 (f_{ref}/f_{set} Agree 1)

Closes when the actual output frequency or motor speed (CLV, CLV/PM) and the frequency reference are within the speed agree width (L4-02) of the programmed speed agree level (L4-01).

Status	Description
Open	Output frequency or motor speed and frequency reference are not both within the range of L4-01 ±L4-02.
Closed	Output frequency or motor speed and the frequency reference are both within the range of L4-01 ±L4-02.

Note: Frequency detection works in forward and reverse. The value of L4-01 is used as the detection level for both directions.

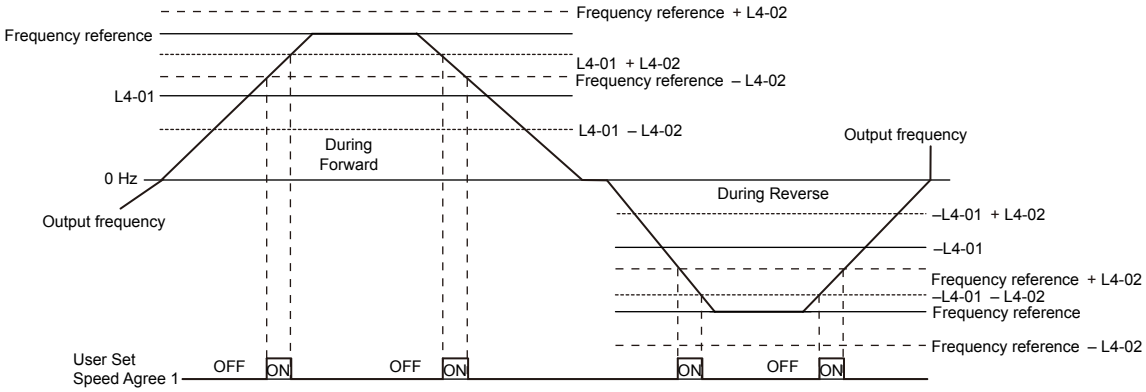

Figure 5.71 User Set Speed Agree 1 Time Chart

Refer to L4-01, L4-02: Speed Agree Detection Level and Detection Width on page 352 for more instructions.

Setting 4: Frequency Detection 1

The output opens when the output frequency or motor speed (CLV, CLV/PM) rises above the detection level set in L4-01 plus the detection width set in L4-02. The terminal remains open until the output frequency or motor speed fall below the level set in L4-01.

Status	Description
Open	Output frequency or motor speed exceeded L4-01 + L4-02.
Closed	Output frequency or motor speed is below L4-01 or has not exceeded L4-01 + L4-02.

Note: Frequency detection works in forward and reverse. The value of L4-01 is used as the detection level for both directions.

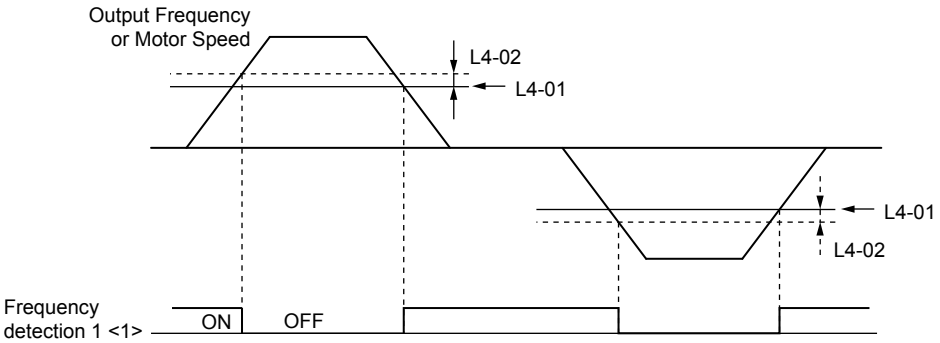

Figure 5.72 Frequency Detection 1 Time Chart

<1> This is the time chart when L4-07 (Speed Agree Detection Selection) is set to 1 (detection always enabled). The default setting for L4-07 is 0 (no detection during baseblock). When L4-07 is set to 0, the terminal opens during baseblock.

Refer to L4-01, L4-02: Speed Agree Detection Level and Detection Width on page 352 for more details.

Setting 5: Frequency Detection 2

The output closes when the output frequency or motor speed (CLV, CLV/PM) is above the detection level set in L4-01. The terminal remains closed until the output frequency or motor speed fall below L4-01 minus the setting of L4-02.

Status	Description
Open	Output frequency or motor speed is below L4-01 minus L4-02 or has not exceeded L4-01.
Closed	Output frequency or motor speed exceeded L4-01.

Note: Frequency detection works in forward and reverse. The value of L4-01 is used as the detection level for both directions.

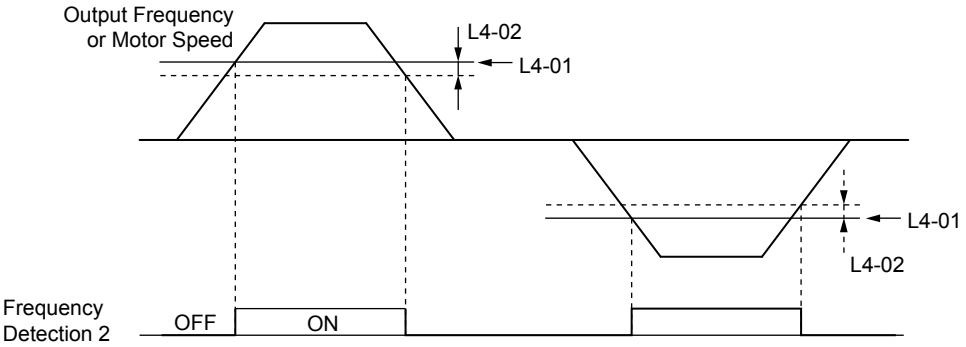

Figure 5.73 Frequency Detection 2 Time Chart

Refer to L4-01, L4-02: Speed Agree Detection Level and Detection Width on page 352 for more details.

Setting 6: Drive Ready

The output closes when the drive is ready to operate the motor. The terminal will not close under the conditions listed below, and any Run commands will be disregarded.

- When the power is shut off
- During a fault
- When the internal power supply of the drive has malfunctioned
- When a parameter setting error makes it impossible to run
- Although stopped, an overvoltage or undervoltage situation occurs
- While editing a parameter in the Programming Mode (when b1-08 = 0)

Setting 7: DC Bus Undervoltage

The output closes when the DC bus voltage or control circuit power supply drops below the trip level set in L2-05. A fault in the DC bus circuit will also cause the terminal set for “DC bus undervoltage” to close.

Status	Description
Open	DC bus voltage is above the level set to L2-05.
Closed	DC bus voltage has fallen below the trip level set to L2-05.

Setting 8: During Baseblock (N.O.)

The output closes to indicate that the drive is in a baseblock state. While in baseblock, output transistors do not switch and no main circuit voltage is output.

Status	Description
Open	Drive is not in a baseblock state.
Closed	Baseblock is being executed.

Setting 9: Frequency Reference Source

Displays the currently selected frequency reference source.

Status	Description
Open	Frequency reference is provided from External reference 1 (b1-01) or External reference 2 (b1-15).
Closed	Frequency reference is being sourced from the digital operator.

Setting A: Run Command Source

Displays the currently selected Run command source.

Status	Description
Open	Run command is provided from External reference 1 (b1-02) or 2 (b1-16).
Closed	Run command is being sourced from the digital operator.

Setting B, 17, 18, 19: Torque Detection 1 (N.O., N.C.), Torque Detection 2 (N.O., N.C.)

These digital output functions signal an overtorque or undertorque situation to an external device.

Set up the torque detection levels and select the output function from the table below. ***Refer to L6: Torque Detection on page 355*** for details.

Setting	Status	Description
B	Closed	Torque detection 1 (N.O.): Output current/torque exceeds (overtorque detection) or is below (undertorque detection) the torque value set in parameter L6-02 for longer than the time specified in parameter L6-03.
17	Open	Torque detection 1 (N.C.): Output current/torque exceeds (overtorque detection) or is below (undertorque detection) the torque value set in parameter L6-02 for longer than the time specified in parameter L6-03.
18	Closed	Torque detection 2 (N.O.): Output current/torque exceeds (overtorque detection) or is below (undertorque detection) the torque value set in parameter L6-05 for longer than the time specified in parameter L6-06.
19	Open	Torque detection 2 (N.C.): Output current/torque exceeds (overtorque detection) or is below (undertorque detection) the torque value set in parameter L6-05 for longer than the time specified in parameter L6-06.

Setting C: Frequency Reference Loss

An output set for this function closes when frequency reference loss is detected. ***Refer to L4-05: Frequency Reference Loss Detection Selection on page 353*** for details.

Setting D: Braking Resistor Fault

An output programmed for this function closes when the dynamic braking resistor (DB) overheats or the braking transistor is in a fault condition.

Setting E: Fault

The output closes when the drive faults (excluding CPF00 and CPF01 faults).

Setting F: Through Mode

Select this setting when using the terminal in a pass-through mode. When set to F, an output does not trigger any function in the drive. Setting F, however, still allows the output status to be read by a PLC via a communication option or MEMOBUS/Modbus communications.

Setting 10: Minor Fault

The output closes when a minor fault condition is present.

Setting 11: Fault Reset Command Active

The output closes when there is an attempt to reset a fault situation from the control circuit terminals, via serial communications, or using a communications option card.

Setting 12: Timer Output

This setting configures a digital output terminal as the output for the timer function. *Refer to b4: Timer Function on page 222* for details.

Setting 13: Speed Agree 2 (f_{ref} /f_{out} Agree 2)

The output closes when the actual output frequency or motor speed (CLV, CLV/PM) is within the speed agree width (L4-04) of the current frequency reference, regardless of the direction.

Status	Description
Open	Output frequency or motor speed is outside the range of frequency reference ±L4-04.
Closed	Output frequency or motor speed is within the range of frequency reference ±L4-04.

Note: Detection works in forward and reverse.

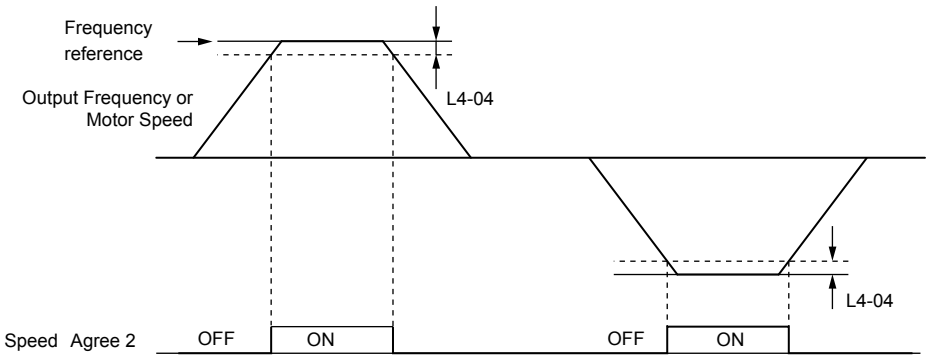

Figure 5.74 Speed Agree 2 Time Chart

Refer to L4-03, L4-04: Speed Agree Detection Level and Detection Width (+/-) on page 353 for more details.

Setting 14: User-Set Speed Agree 2 (f_{ref} /f_{set} Agree 2)

The output closes when the actual output frequency or motor speed (CLV, CLV/PM) and the frequency reference are within the speed agree width (L4-04) of the programmed speed agree level (L4-03).

Status	Description
Open	Output frequency or motor speed and frequency reference are both outside the range of L4-03 ±L4-04.
Closed	Output frequency or motor speed and the frequency reference are both within the range of L4-03 ±L4-04.

Note: The detection level L4-03 is a signed value; detection works in the specified direction only.

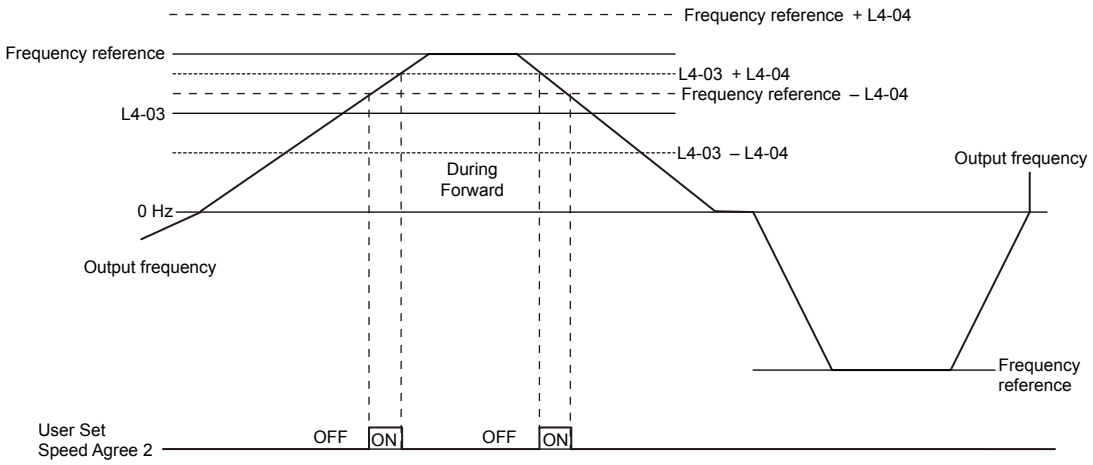

Figure 5.75 User-Set Speed Agree 2 Example with a Positive L3-04 Value

Refer to L4-03, L4-04: Speed Agree Detection Level and Detection Width (+/-) on page 353 for more details.

Setting 15: Frequency Detection 3

The output opens when the output frequency or motor speed (CLV, CLV/PM) rises above the detection level set in L4-03 plus the detection with set in L4-04. The terminal remains open until the output frequency or motor speed falls below the level set in L4-03. The detection level L4-03 is a signed value; detection works in the specified direction only.

Status	Description
Open	Output frequency or motor speed exceeded L4-03 plus L4-04.
Closed	Output frequency or motor speed is below L4-03 or has not exceeded L4-03 plus L4-04.

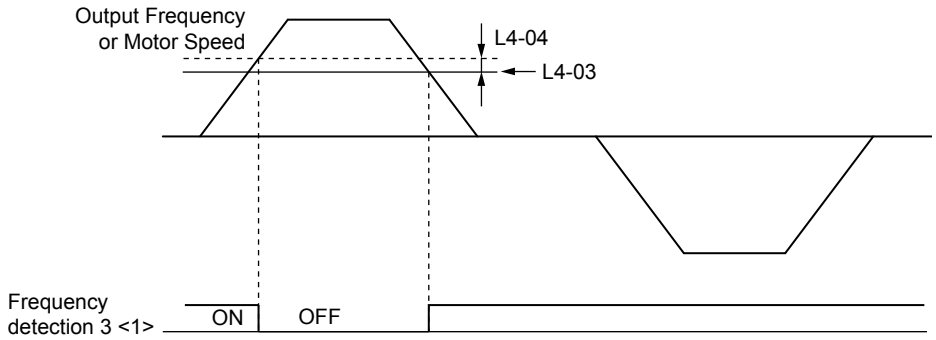

Figure 5.76 Frequency Detection 3 Example with a Positive L3-04 Value

<1> This is the time chart when L4-07 (Speed Agree Detection Selection) is set to 1 (detection always enabled). The default setting for L4-07 is 0 (no detection during baseblock). When L4-07 is set to 0, the terminal opens during baseblock.

Refer to L4-03, L4-04: Speed Agree Detection Level and Detection Width (+/-) on page 353 for more details.

Setting 16: Frequency Detection 4

The output closes when the output frequency or motor speed (CLV, CLV/PM) is above the detection level set in L4-03. The terminal remains closed until the output frequency or motor speed falls below L4-03 minus the setting of L4-04.

Status	Description
Open	Output frequency or motor speed is below L4-03 minus L4-04 or has not exceeded L4-03.
Closed	Output frequency or motor speed exceeded L4-03.

Note: The detection level L4-03 is a signed value; detection works in the specified direction only.

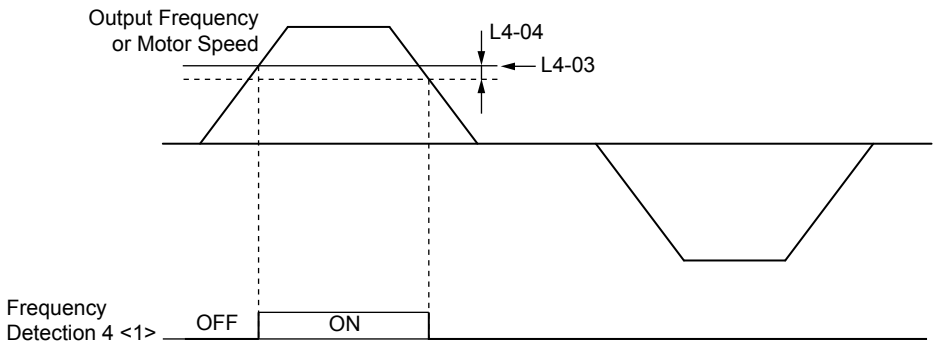

Figure 5.77 Frequency Detection 4 Example with Positive L3-04 Value

<1> This is the time chart when L4-07 (Speed Agree Detection Selection) is set to 1 (detection always enabled). The default setting for L4-07 is 0 (no detection during baseblock). When L4-07 is set to 0, the terminal opens during baseblock.

Refer to L4-03, L4-04: Speed Agree Detection Level and Detection Width (+/-) on page 353 for more details.

Setting 1A: During Reverse

A digital output set for "During reverse" closes when the drive is running the motor in the reverse direction.

Status	Description
Open	Motor is being driven in the forward direction or stopped.
Closed	Motor is being driven in reverse.

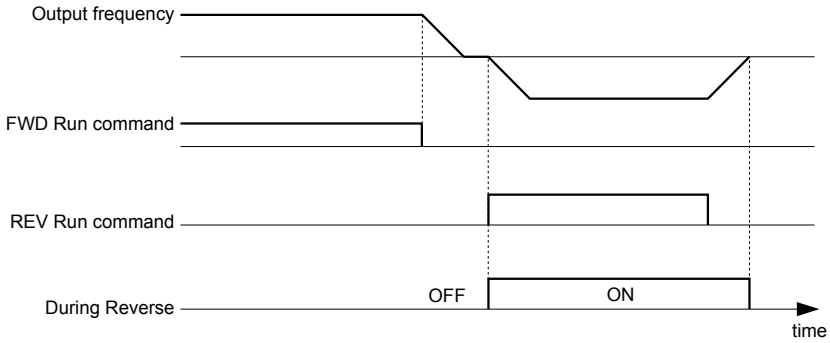

Figure 5.78 Reverse Direction Output Example Time Chart

Setting 1B: During Baseblock (N.C.)

The output opens to indicate that the drive is in a baseblock state. While Baseblock is executed, output transistors do not switch and no main circuit voltage is output.

Status	Description
Open	Baseblock is being executed.
Closed	Drive is not in a baseblock state.

Setting 1C: Motor 2 Selection

Indicates which motor is selected when another output terminal is set to switch drive operation between two motors (H1-☐☐ = 16). ***Refer to Setting 16: Motor 2 Selection on page 303*** for details on switching motors.

Status	Description
Open	Motor 1 is selected.
Closed	Motor 2 is selected.

Setting 1D: During Regeneration

Terminal closes when the motor is driven in the regenerative mode.

Setting 1E: Restart Enabled

An output set for "Restart enabled" closes when the drive attempts to restart after a fault has occurred.

The fault restart function allows the drive to automatically clear a fault. The terminal set to 1E will close after the fault is cleared and the drive has attempted to restart. If the drive cannot successfully restart within the number of attempts permitted by L5-01, a fault will be triggered and the terminal set to 1E will open. ***Refer to L5: Fault Restart on page 354*** for details on automatic restart.

Setting 1F: Motor Overload Alarm (oL1)

The output closes when the motor overload level estimated by the oL1 fault detection exceeds 90% of the oL1 detection level. ***Refer to L1-01: Motor Overload Protection Selection on page 331***.

Setting 20: Drive Overheat Pre-Alarm (oH)

The output closes when the drive heatsink temperature reaches the level specified by parameter L8-02. ***Refer to L8-02: Overheat Alarm Level on page 360*** for details on drive overheat detection.

Setting 22: Mechanical Weakening Detection

The output closes when a mechanical weakening situation is detected. ***Refer to Mechanical Weakening Detection on page 357*** for details.

Setting 2F: Maintenance Period

The output closes when the cooling fan, DC bus capacitors, or DC bus pre-charge relay may require maintenance as determined by the estimated performance life span of those components. ***Refer to Periodic Maintenance on page 463*** for details.

Setting 30: During Torque Limit

The output closes when the motor is operating at the torque limit specified by the L7-□□ parameters or an analog input. This setting can only be used in OLV, CLV, AOLV/PM and CLV/PM control modes. ***Refer to L7-01 to L7-04: Torque Limits on page 359*** for details.

Setting 31: During Speed Limit

The output closes when the speed limit has been reached. This function can be used in CLV and CLV/PM control modes.

Status	Description
Open	The conditions described below are not present.
Closed	1. The frequency reference has reached the upper limit set in d2-01. 2. The frequency reference has fallen to the lower limit set in d2-02 or d2-03. 3. Parameter b1-05 is set to 1, 2, or 3, and the frequency reference has fallen below the minimum output frequency (E1-09).

Setting 32: During Speed Limit in Torque Control

The motor torque and load torque are not in balance, causing the motor to accelerate. The output closes when the motor reaches the speed limit. ***Refer to d5: Torque Control on page 264*** and ***Indicating Operation at the Speed Limit*** on page ***266*** for details.

Setting 33: Zero Servo Complete

The output closes when Zero Servo is enabled and the load is locked into position within the allowable deviation (b9-02). ***Refer to b9: Zero Servo on page 237*** for information on Zero Servo operation.

Setting 37: During Frequency Output

The output closes when the drive is outputting a frequency.

Status	Description
Open	The drive is not outputting a frequency (one of the following functions is being performed: stop, baseblock, DC Injection Braking (during initial excitation), or Short Circuit Braking).
Closed	Drive is outputting frequency.

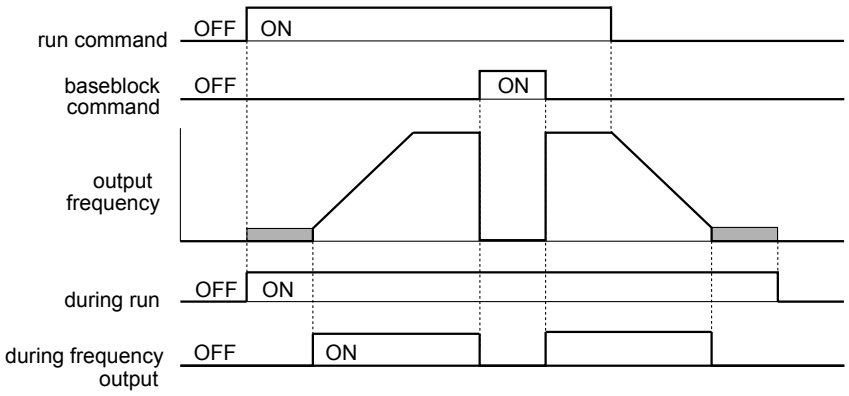

Figure 5.79 During Frequency Output Time Chart

Setting 38: Drive Enable

Reflects the status of a digital input configured as a "Drive enable" input (H1-□□ = 6A). If that digital input closes, then the digital output set for "Drive enable" will also close.

Setting 39: Watt Hour Pulse Output

Outputs a pulse to indicate the watt hours. ***Refer to H2-06: Watt Hour Output Unit Selection on page 320*** for details.

Setting 3C: LOCAL/REMOTE Status

The output terminal closes while the drive is set for LOCAL and opens when in REMOTE.

Status	Description
Open	REMOTE: The external reference that has been selected (either b1-01 and b1-02 or b1-15 and b1-16) is used as frequency reference and Run command source.
Closed	LOCAL: The digital operator is used as frequency reference and Run command source.

Setting 3D: During Speed Search

The output terminal closes while Speed Search is being performed. ***Refer to b3: Speed Search on page 216*** for details.

Setting 3E: PID Feedback Low

Output terminal closes when a PID feedback loss (FbL) is detected. The feedback is considered to be lost if it falls below the level set to b5-13 for longer than the time set to b5-14. ***Refer to PID Feedback Loss Detection on page 228*** for details.

Setting 3F: PID Feedback High

Output terminal closes when a PID feedback loss (FbH) is detected. The feedback is considered to be lost if it rises beyond the level set to b5-36 for longer than the time set to b5-37. ***Refer to PID Feedback Loss Detection on page 228*** for details.

Setting 4A: During KEB Operation

The output terminal closes while KEB is being performed. ***Refer to KEB Ride-Thru Function on page 339*** for a KEB function description.

Setting 4B: During Short Circuit Braking

The output terminal closes while Short Circuit Braking is being executed.

Setting 4C: During Fast Stop

The output terminal closes when a Fast Stop is being executed. ***Refer to Setting 15, 17: Fast Stop (N.O., N.C.) on page 302***.

Setting 4D: oH Pre-Alarm Time Limit

The output terminal closes when the drive is reducing the speed due to a drive overheat alarm (L8-03 = 4) and the overheat alarm has not disappeared after 10 frequency reduction operation cycles. ***Refer to L8-03: Overheat Pre-Alarm Operation Selection on page 360*** for a more detailed description.

Setting 4E: Braking Transistor Fault (rr)

The output closes if the internal braking transistor reaches the overheat level.

Setting 4F: Braking Resistor Overheat (rH)

The output closes when the braking resistor exceeds the overheat level. The braking resistor may overheat due to motor regeneration or short deceleration time setting.

Setting 60: Internal Cooling Fan Alarm

The output closes when the drive internal cooling fan has failed.

Setting 61: Rotor Position Detection Complete

After the Run command is given, the output terminal signals that the drive has detected the rotor position (PM motors).

Setting 62: MEMOBUS Register 1 (Selected with H2-07 and H2-08)

The contact output is closed when any of the bits specified by H2-08 for the MEMOBUS/Modbus register address set in H2-07 turn on.

Setting 63: MEMOBUS Register 2 (Selected with H2-09 and H2-10)

The contact output is closed when any of the bits specified by H2-10 for the MEMOBUS/Modbus register address set in H2-09 turn on.

Setting 90 to 92: DriveWorksEZ Digital Output 1 to 3

These settings are for output functions used in DriveWorksEZ. Normally there is no need to change these settings.

Setting 100 to 192: Functions 0 to 92 with Inverse Output

These settings have the same function as settings 0 to 92 but with inverse output. Set as 1□□, where the “1” indicates inverse output and the last two digits specify the setting number of the function.

Examples:

- For inverse output of “8: During baseblock”, set 108.
- For inverse output of “4A: During KEB” set 14A.

■ H2-06: Watt Hour Output Unit Selection

When one of the multi-function terminals is set to output the number of watt hours (H2-01, H2-02, or H2-03 = 39), parameter H2-06 determines the units for the output signal.

This output function provides a watt hour meter or a PLC input by a 200 ms pulse signal. H2-06 determines the frequency that pulses are issued to keep track of the kWh for the drive.

No.	Parameter Name	Setting Range	Default
H2-06	Watt Hour Output Unit Selection	0: 0.1 kWh units 1: 1 kWh units 2: 10 kWh units 3: 100 kWh units 4: 1000 kWh units	0

Note: **1.** A negative power output (i.e., regeneration) does not subtract from the total watt hours.
2. The drive keeps track of the watt hours as long as the control circuit has power. The value is reset when the power supply is shut off.

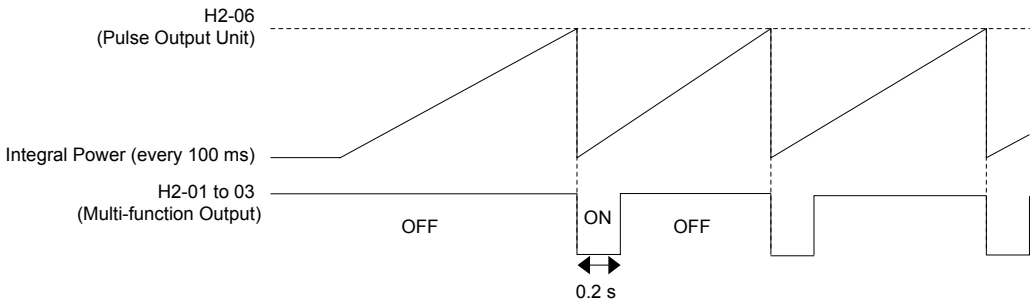

Figure 5.80 Watt Hour Output Example

■ H2-07 to H2-10: MEMOBUS Registers

These parameters specify the MEMOBUS/Modbus registers and bits from which data will be sent to the multi-function contact outputs.

Note: These parameters are not available in models 4A0930 and 4A1200.

No.	Name	Setting Range	Default
H2-07	MEMOBUS Register 1 Address Select	1 to 1FFF	1
H2-08	MEMOBUS Register 1 Bit Select	0 to FFFF	0
H2-09	MEMOBUS Register 2 Address Select	1 to 1FFF	1
H2-10	MEMOBUS Register 2 Bit Select	0 to FFFF	0

The MEMOBUS/Modbus register addresses for sending data to multi-function contact outputs 62 and 63 are specified in H2-07 and H2-09, and the bits for the MEMOBUS/Modbus registers are specified in H2-08 and H2-10.

◆ H3: Multi-Function Analog Inputs

The drive is equipped with three multi-function analog input terminals: A1, A2, and A3. ***Refer to Multi-Function Analog Input Terminal Settings on page 323*** for a listing of the functions that can be set to these terminals.

■ H3-01: Terminal A1 Signal Level Selection

Selects the input signal level for analog input A1.

No.	Name	Setting Range	Default
H3-01	Terminal A1 Signal Level Selection	0 to 1	0

Setting 0: 0 to 10 Vdc

The input level is 0 to 10 Vdc. The minimum input level is limited to 0%, so that a negative input signal due to gain and bias settings will be read as 0%.

Setting 1: -10 to 10 Vdc

The input level is -10 to 10 Vdc. If the resulting voltage is negative after being adjusted by gain and bias settings, then the motor will rotate in reverse.

■ H3-02: Terminal A1 Function Selection

Selects the input signal level for analog input A1. *Refer to Multi-Function Analog Input Terminal Settings on page 323* for instructions on adjusting the signal level.

No.	Name	Setting Range	Default
H3-02	Terminal A1 Function Selection	0 to 32	0

■ H3-03, H3-04: Terminal A1 Gain and Bias Settings

Parameter H3-03 sets the level of the selected input value that is equal to 10 Vdc input at terminal A1 (gain).

Parameter H3-04 sets the level of the selected input value that is equal to 0 V input at terminal A1 (bias).

Use both parameters to adjust the characteristics of the analog input signal to terminal A1.

No.	Name	Setting Range	Default
H3-03	Terminal A1 Gain Setting	-999.9 to 999.9%	100.0%
H3-04	Terminal A1 Bias Setting	-999.9 to 999.9%	0.0%

Setting Examples

- Gain H3-03 = 200%, bias H3-04 = 0, terminal A1 as frequency reference input (H3-02 = 0):

  A 10 Vdc input is equivalent to a 200% frequency reference and 5 Vdc is equivalent to a 100% frequency reference. Since the drive output is limited by the maximum frequency parameter (E1-04), the frequency reference will be equal to E1-04 above 5 Vdc.

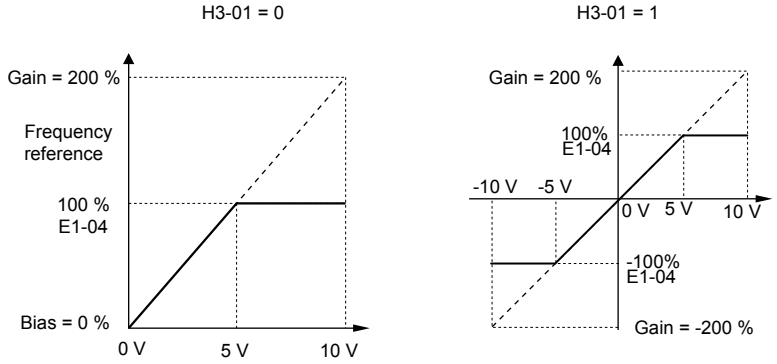

Figure 5.81 Frequency Reference Setting by Analog Input with Increased Gain

- Gain H3-03 = 100%, bias H3-04 = -25%, terminal A1 as frequency reference input:

  An input of 0 Vdc will be equivalent to a -25% frequency reference.

  When parameter H3-01 = 0, the frequency reference is 0% between 0 and 2 Vdc input.

  When parameter H3-01 = 1, the motor will rotate in reverse between -10 and 2 Vdc input.

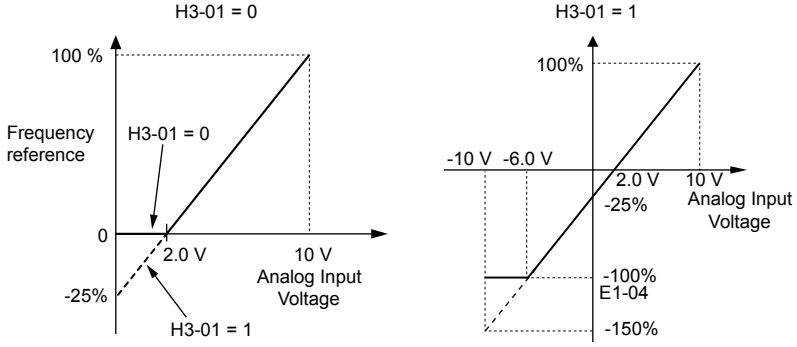

Figure 5.82 Frequency Reference Setting by Analog Input with Negative Bias

■ H3-05: Terminal A3 Signal Level Selection

Selects the input signal level for analog input A3. *Refer to Multi-Function Analog Input Terminal Settings on page 323* for a list of functions and descriptions.

Be sure to set DIP switch S4 on the terminal board accordingly for multi-function analog input or PTC input. Also *Refer to Terminal A3 Analog/PTC Input Selection on page 147*.

No.	Name	Setting Range	Default
H3-05	Terminal A3 Signal Level Selection	0, 1	0

Setting 0: 0 to 10 Vdc

The input level is 0 to 10 Vdc. See the explanation provided for H3-01. *Refer to Setting 0: 0 to 10 Vdc on page 320*.

Setting 1: -10 to 10 Vdc

The input level is -10 to 10 Vdc. See the explanation provided for H3-01. *Refer to Setting 1: -10 to 10 Vdc on page 320*.

■ H3-06: Terminal A3 Function Selection

Determines the function assigned to analog input terminal A3. *Refer to Multi-Function Analog Input Terminal Settings on page 323* for a list of functions and descriptions.

No.	Name	Setting Range	Default
H3-06	Terminal A3 Function Selection	0 to 32	2

■ H3-07, H3-08: Terminal A3 Gain and Bias Setting

Parameter H3-07 sets the level of the selected input value that is equal to 10 Vdc input at terminal A3 (gain).

Parameter H3-08 sets the level of the selected input value that is equal to 0 V input at terminal A3 (bias).

No.	Name	Setting Range	Default
H3-07	Terminal A3 Gain Setting	-999.9 to 999.9%	100.0%
H3-08	Terminal A3 Bias Setting	-999.9 to 999.9%	0.0%

■ H3-09: Terminal A2 Signal Level Selection

Selects the input signal level for analog input A2. Set DIP switch S1 on the terminal board accordingly for a voltage input or current input.

No.	Name	Setting Range	Default
H3-09	Terminal A2 Signal Level Selection	0 to 3	2

Setting 0: 0 to 10 Vdc

The input level is 0 to 10 Vdc. *Refer to Setting 0: 0 to 10 Vdc on page 320*.

Setting 1: 0 to 10 Vdc Bipolar

The input level is -10 to 10 Vdc. *Refer to Setting 1: -10 to 10 Vdc on page 320*.

Setting 2: 4 to 20 mA

The input level is 4 to 20 mA. Negative input values by negative bias or gain settings will be limited to 0%.

Setting 3: 0 to 20 mA

The input level is 0 to 20 mA. Negative input values by negative bias or gain settings will be limited to 0%.

■ H3-10: Terminal A2 Function Selection

Determines the function assigned to analog input terminal A2. *Refer to Multi-Function Analog Input Terminal Settings on page 323* for a list of functions and descriptions.

No.	Name	Setting Range	Default
H3-10	Terminal A2 Function Selection	0 to 32	0

■ H3-11, H3-12: Terminal A2 Gain and Bias Setting

Parameter H3-11 sets the level of the input value selected that is equal to 10 Vdc input or 20 mA input to terminal A2.

Parameter H3-12 sets the level of the input value selected that is equal to 0 V, 4 mA or 0 mA input at terminal A2.

Use both parameters to adjust the characteristics of the analog input signal to terminal A2. The setting works in the same way as parameters H3-03 and H3-04 for analog input A1.

No.	Name	Setting Range	Default
H3-11	Terminal A2 Gain Setting	-999.9 to 999.9%	100.0%
H3-12	Terminal A2 Bias Setting	-999.9 to 999.9%	0.0%

■ H3-13: Analog Input Filter Time Constant

Parameter H3-13 sets the time constant for a first order filter that will be applied to the analog inputs.

An analog input filter prevents erratic drive control when using a “noisy” analog reference. Drive operation becomes more stable as the programmed time becomes longer, but it also becomes less responsive to rapidly changing analog signals.

No.	Name	Setting Range	Default
H3-13	Analog Input Filter Time Constant	0.00 to 2.00 s	0.03 s

■ H3-14: Analog Input Terminal Enable Selection

When one of the multi-function digital input parameters is set for “Analog input enable” (H1-□□ = C), the value set to H3-14 determines which analog input terminals are enabled when the input is closed. All of the analog input terminals will be enabled all of the time when H1-□□ ≠ C. The terminals not set as the target are not influenced by input signals.

No.	Name	Setting Range	Default
H3-14	Analog Input Terminal Enable Selection	1 to 7	7

Setting 1: A1 Only Enabled

Setting 2: A2 Only Enabled

Setting 3: A1 and A2 Only Enabled

Setting 4: A3 Only Enabled

Setting 5: A1 and A3 Only Enabled

Setting 6: A2 and A3 Only Enabled

Setting 7: All Analog Input Terminals Enabled

■ H3-16 to H3-18: Terminal A1/A2/A3 Offset

Set the offset level of the selected input value to terminals A1, A2, or A3 that is equal to 0 Vdc input. These parameters rarely require adjustment.

No.	Name	Setting Range	Default
H3-16	Terminal A1 Offset	-500 to 500	0
H3-17	Terminal A2 Offset	-500 to 500	0
H3-18	Terminal A3 Offset	-500 to 500	0

■ Multi-Function Analog Input Terminal Settings

See *Table 5.42* for information on how H3-02, H3-10, and H3-06 determine functions for terminals A1, A2, and A3.

Note: The scaling of all input functions depends on the gain and bias settings for the analog inputs. Set these to appropriate values when selecting and adjusting analog input functions.

Table 5.42 Multi-Function Analog Input Terminal Settings

Setting	Function	Page
0	Frequency Bias	*324*
1	Frequency Gain	*324*
2	Auxiliary Frequency Reference 1	*324*
3	Auxiliary Frequency Reference 2	*324*
4	Output Voltage Bias	*324*
5	Accel/Decel Time Gain	*324*
6	DC Injection Braking Current	*324*
7	Torque Detection Level	*325*

Setting	Function	Page
8	Stall Prevention Level During Run	*325*
9	Output Frequency Lower Limit Level	*325*
B	PID Feedback	*325*
C	PID Setpoint	*325*
D	Frequency Bias	*325*
E	Motor Temperature (PTC Input)	*325*
F	Through Mode	*325*

Setting	Function	Page
10	Forward Torque Limit	325
11	Reverse Torque Limit	
12	Regenerative Torque limit	
13	Torque Limit Using Torque Reference/Speed Control	326
14	Torque Compensation	326
15	General Torque Limit	325

Setting	Function	Page
16	Differential PID Feedback	326
17 <1>	Motor Thermistor (NTC)	326
1F	Through Mode	325
30	DriveWorksEZ Analog Input 1	326
31	DriveWorksEZ Analog Input 2	
32	DriveWorksEZ Analog Input 3	

<1> This function is only available in models 4A0930 to 4A1200.

Setting 0: Frequency Bias

The input value of an analog input set to this function will be added to the analog frequency reference value. When the frequency reference is supplied by a different source other than the analog inputs, this function will have no effect. Use this setting also when only one of the analog inputs is used to supply the frequency reference.

By default, analog inputs A1 and A2 are set for this function. Simultaneously using A1 and A2 increases the frequency reference by the total of all inputs.

Example: If the analog frequency reference from analog input terminal A1 is 50% and a bias of 20% is applied by analog input terminal A2, the resulting frequency reference will be 70% of the maximum output frequency.

Setting 1: Frequency Gain

The input value of an analog input set to this function will be multiplied with the analog frequency reference value.

Example: If the analog frequency reference from analog input terminal A1 is 80% and a gain of 50% is applied from analog input terminal A2, the resulting frequency reference will be 40% of the maximum output frequency.

Setting 2: Auxiliary Reference 1

Sets the auxiliary frequency reference 1 when multi-step speed operation is selected. ***Refer to Multi-Step Speed Selection on page 256*** for details.

Setting 3: Auxiliary Reference 2

Sets the auxiliary frequency reference 2 when multi-step speed operation is selected. ***Refer to Multi-Step Speed Selection on page 256*** for details.

Setting 4: Output Voltage Bias

Voltage bias boosts the output voltage of the V/f curve as a percentage of the maximum output voltage (E1-05). Available only when using V/f Control.

Setting 5: Accel/Decel Time Gain

Adjusts the gain level for the acceleration and deceleration times set to parameters C1-01 through C1-08.

The drive acceleration time is calculated by multiplying the gain level to C1-□□ as follows:

C1-□□ × Accel/decel time gain = Drive accel/decel time

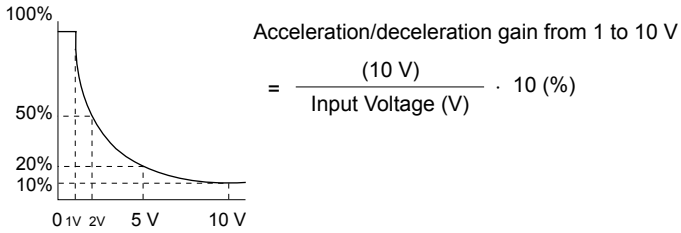

Figure 5.83 Accel/Decel Time Gain with Analog Input Terminal

Setting 6: DC Injection Braking Current

The current level used for DC Injection Braking is set as a percentage of the drive rated current.

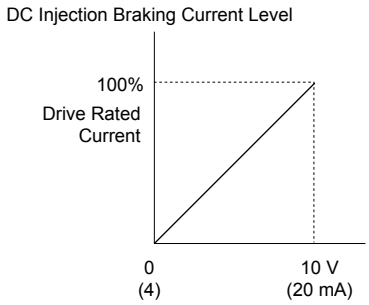

Figure 5.84 DC Injection Braking Current Using an Analog Input Terminal

Setting 7: Torque Detection Level

Using this setting, the overtorque/undertorque detection level for torque detection 1 (L6-01) can be set by an analog input. The analog input replaces the level set to L6-02. An analog input of 100% (10 V or 20 mA) sets a torque detection level equal to 100% drive rated current/motor rated torque. Adjust the analog input gain if higher detection level settings are required. ***Refer to L6: Torque Detection on page 355*** for details on torque detection.

Setting 8: Stall Prevention Level

Allows an analog input signal to adjust the Stall Prevention level. ***Figure 5.85*** shows the setting characteristics. The drive will use the lower value of the Stall Prevention level set to L3-06 or the level coming from the selected analog input terminal.

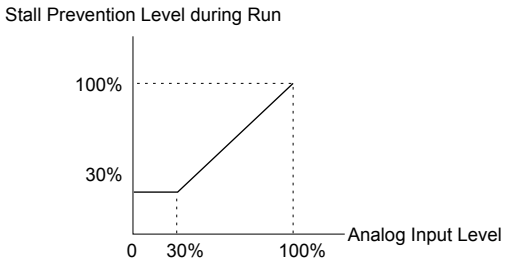

Figure 5.85 Stall Prevention During Run Using an Analog Input Terminal

Setting 9: Output Frequency Lower Limit Level

The user can adjust the lower limit of the output frequency using an analog input signal.

Setting B: PID Feedback

Supplies the PID feedback value. This setting requires PID operation to be enabled in b5-01. ***Refer to PID Feedback Input Methods on page 224***.

Setting C: PID Setpoint

Supplies the PID setpoint value and makes the frequency reference selected in parameter b1-01 no longer the PID setpoint. PID operation to be enabled in b5-01 to use this setting. ***Refer to PID Setpoint Input Methods on page 224***.

Setting D: Frequency Bias

The input value of an analog input set to this function will be added to the frequency reference. This function can be used with any frequency reference source.

Setting E: Motor Temperature

In addition to motor overload fault detection oL1, it is possible to use a Positive Temperature Coefficient (PTC) thermistor for motor insulation protection. ***Refer to Motor Protection Using a Positive Temperature Coefficient (PTC) Thermistor on page 334*** for a detailed explanation.

Setting F, 1F: Through Mode

When set to F or 1F, an input does not affect any drive function, but the input level can still be read out by a PLC via a communication option or MEMOBUS/Modbus communications.

Setting 10, 11, 12, 15: Forward, Reverse, Regenerative, General Torque Limit (OLV, CLV, AOLV/PM, CLV/PM)

These functions set a torque limit using analog inputs for different operating conditions. ***Refer to L7: Torque Limit on page 358*** for details.

Setting 13: Torque Limit Using Torque Reference/Speed Control

Sets the torque reference (when in Torque Control) or the torque limit (when in Speed Control). ***Refer to Setting the Torque Reference, Speed Limit, and Torque Compensation Values on page 264*** for details.

Setting 14: Torque Compensation

Sets a torque compensation value when using Torque Control. ***Refer to Setting the Torque Reference, Speed Limit, and Torque Compensation Values on page 264*** for details.

Setting 16: Differential PID Feedback

If an analog value is set for this function, the PID controller is set for differential feedback. The difference of the PID feedback input value and the differential feedback input value builds the feedback value used to calculate the PID input. ***Refer to PID Feedback Input Methods on page 224***.

Setting 17: Motor Thermistor (NTC)

Used as a complement or a substitution for oL1. ***Refer to Motor Protection Using an NTC Thermistor Input on page 336*** for details.

Setting 30, 31, 32: DriveWorksEZ Analog Inputs 1, 2, and 3

These settings are for DriveWorksEZ functions. Normally there is no need to change or apply these settings.

◆ H4: Multi-Function Analog Outputs

These parameters assign functions to analog output terminals FM and AM for monitoring a specific aspect of drive performance.

■ H4-01, H4-04: Multi-Function Analog Output Terminal FM, AM Monitor Selection

Sets the desired drive monitor parameter U□-□□ to output as an analog value via terminal FM and AM. ***Refer to U: Monitor Parameters on page 386*** for a list of all monitors. The “Analog Output Level” column indicates whether a monitor can be used for analog output.

Example: Enter “103” for U1-03.

No.	Name	Setting Range	Default
H4-01	Multi-Function Analog Output Terminal FM Monitor Selection	000 to 999	102
H4-04	Multi-Function Analog Output Terminal AM Monitor Selection	000 to 999	103

A setting of 031 or 000 applies no drive monitor to the analog output. With either of these settings, the output level of the terminals FM and AM can be set by a PLC via a communication option or MEMOBUS/Modbus (through mode).

■ H4-02, H4-03: Multi-Function Analog Output Terminal FM Gain and Bias H4-05, H4-06: Multi-Function Analog Output Terminal AM Gain and Bias

Parameters H4-02 and H4-05 set the terminal FM and AM output signal level when the value of the selected monitor is at 100%. Parameters H4-03 and H4-06 set the terminal FM and AM output signal level when the value of the selected monitor is at 0%. Both are set as a percentage, where 100% equals 10 Vdc or 20 mA analog output and 0% equals 0 V or 4 mA. The output voltage of both terminals is limited to +/-10 Vdc.

The output signal range can be selected between 0 to +10 Vdc or -10 to +10 Vdc, or 4 to 20 mA using parameter H4-07 and H4-08. ***Figure 5.86*** illustrates how gain and bias settings work.

No.	Name	Setting Range	Default
H4-02	Multi-Function Analog Output Terminal FM Gain	-999.9 to 999.9%	100.0%
H4-03	Multi-Function Analog Output Terminal FM Bias	-999.9 to 999.9%	0.0%
H4-05	Multi-Function Analog Output Terminal AM Gain	-999.9 to 999.9%	50.0%
H4-06	Multi-Function Analog Output Terminal AM Bias	-999.9 to 999.9%	0.0%

Using Gain and Bias to Adjust Output Signal Level

The output signal is adjustable while the drive is stopped.

Terminal FM

1. View the value set to H4-02 (Terminal FM Monitor Gain) on the digital operator. A voltage equal to 100% of the parameter being set in H4-01 will be output from terminal FM.
2. Adjust H4-02 viewing the monitor connected to the terminal FM.

3. View the value set to H4-03 on the digital operator; terminal FM will output a voltage equal to 0% of the parameter being set in H4-01.
4. Adjust H4-03 viewing the output signal on the terminal FM.

Terminal AM

1. View the value set to H4-05 (Terminal AM Monitor Gain) on the digital operator. A voltage equal to 100% of the parameter being set in H4-04 will be output from terminal AM.
2. Adjust H4-05 viewing the monitor connected to the terminal AM.
3. View the value set to H4-06 on the digital operator; terminal AM will output a voltage equal to 0% of the parameter being set in H4-04.
4. Adjust H4-06 viewing the output signal on the terminal AM.

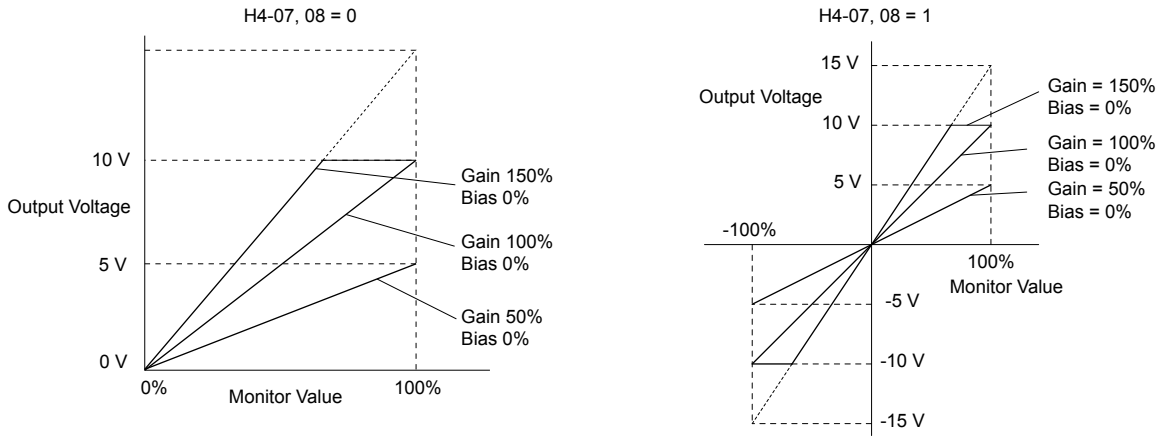

Figure 5.86 Analog Output Gain and Bias Setting Example 1 and 2

Set H4-03 to 30% for an output signal of 3 V at terminal FM when the monitored value is at 0%.

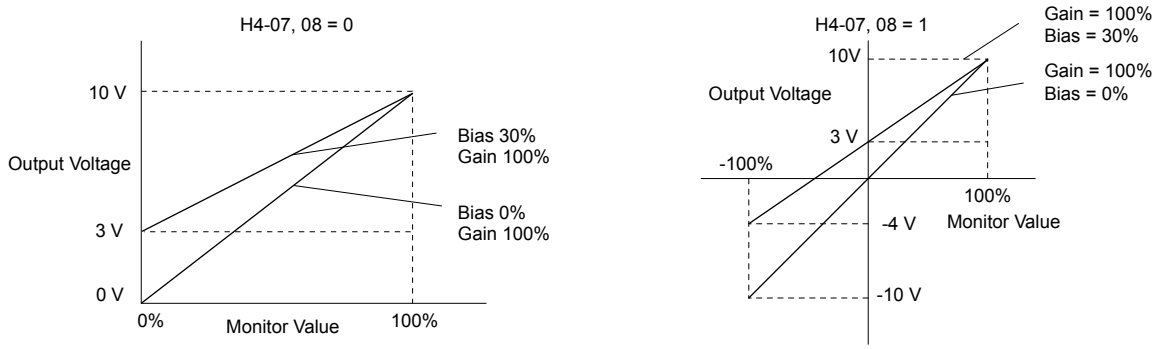

Figure 5.87 Analog Output Gain and Bias Setting Example 3

■ H4-07, H4-08: Multi-Function Analog Output Terminal FM, AM Signal Level Selection

Sets the voltage output level of U parameter (monitor parameter) data to terminal FM and terminal AM using parameters H4-07 and H4-08.

Set jumper S5 on the terminal board accordingly when changing these parameters. ***Refer to Terminal AM/FM Signal Selection on page 148*** for details on setting S5.

No.	Name	Setting Range	Default
H4-07	Multi-Function Analog Output Terminal FM Signal Level Selection	0 to 2	0
H4-08	Multi-Function Analog Output Terminal AM Signal Level Selection	0 to 2	0

Setting 0: 0 to 10 V
Setting 1: -10 V to 10 V
Setting 2: 4 to 20 mA

◆ H5: MEMOBUS/Modbus Serial Communication

Serial communication is possible in the drive using the built-in RS-422/485 port (terminals R+, R-, S+, S-) and programmable logic controllers (PLCs) or similar devices running the MEMOBUS/Modbus protocol.

The H5-□□ parameters set the drive for MEMOBUS/Modbus Communications. ***Refer to MEMOBUS/Modbus Serial Communication on page 707*** for detailed descriptions of the H5-□□ parameters.

◆ H6: Pulse Train Input/Output

A one-track pulse train signal with a maximum frequency of 32 kHz can be input to the drive at terminal RP. This pulse train signal can be used as the frequency reference, for PID functions, or as the speed feedback signal in V/f Control.

The pulse output monitor terminal MP can output drive monitor values as a pulse train signal with a maximum frequency of 32 kHz in sinking or sourcing mode. ***Refer to Using the Pulse Train Output on page 146*** for details.

Use parameters H6-□□ to set the scale and other aspects of the pulse input terminal RP and pulse output terminal MP.

■ H6-01: Pulse Train Input Terminal RP Function Selection

Selects the function of pulse train input terminal RP.

No.	Name	Setting Range	Default
H6-01	Pulse Train Input Terminal RP Function Selection	0 to 3	0

Setting 0: Frequency Reference

If the pulse input is set for this function and the frequency reference source is set to pulse input (b1-01, b1-15 = 4), the drive reads the frequency value from terminal RP.

Setting 1: PID Feedback Value

Using this setting, the feedback value for PID control can be supplied as a pulse signal at terminal RP. ***Refer to b5: PID Control on page 223*** for details on PID control.

Setting 2: PID Setpoint Value

Using this setting, the setpoint value for PID control can be supplied as a pulse signal at terminal RP. ***Refer to b5: PID Control on page 223*** for details on PID control.

Setting 3: Speed Feedback (V/f Control with Simple Speed Feedback)

This setting can be used in V/f control to increase the speed control precision by using a motor speed feedback signal. The drive reads the speed feedback from terminal RP, compares it to the frequency reference and compensates the motor slip using a speed regulator (ASR, set up in the C5-□□ parameters) like shown in ***Figure 5.88***. Because input terminal RP is incapable of detecting motor direction, a separate way of determining motor direction still needs to be set up:

1. **Using a Digital Input**

   If a digital input programmed for “Forward/reverse detection” (H1-□□ = 7E) is closed, the drive assumes reverse rotation. If open, then the drive assumes that the motor is rotating forwards.

2. **Using the Frequency Reference Direction**

   If no digital input is set to “Forward/reverse detection” (H1-□□ = 7E), the drive uses the direction of the frequency reference as the direction for the speed feedback detected at the pulse input.

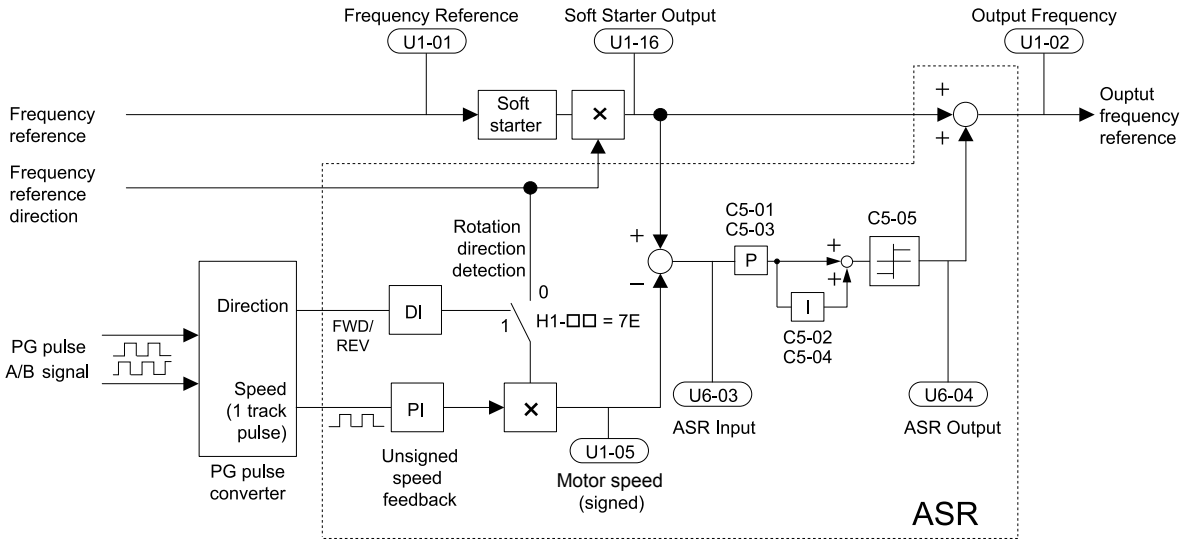

Figure 5.88 Speed Control with ASR in V/f with Simple Speed Feedback

Enabling V/f Control with Simple Speed Feedback:

1. Set the drive to V/f Control (A1-02 = 0).
2. Connect the motor speed pulse signal to the pulse input RP, set H6-01 = 3, and set the pulse signal frequency that is equal to the maximum speed to H6-02 (pulse input scaling). Make sure the pulse input bias (H6-04) is 0% and the gain (H6-03) is 100%.
3. Decide on the signal used for detecting the direction. Set H1-□□ = 7E if using a digital input.
4. Use the ASR gain and integral time parameters described in *C5: Automatic Speed Regulator (ASR)* on page *246* for adjusting the responsiveness.

Note:
1. C5 parameters will appear when using V/f Control (A1-02 = 0) and when the pulse input RP function is set for simple PG feedback in V/f Control (H6-01 = 3).
2. If running two motors from the same drive, V/f Control with simple PG feedback can be used for motor 1 only.

■ H6-02: Pulse Train Input Scaling

Sets the pulse signal frequency that is equal to 100% of the input value selected in parameter H6-01.

No.	Name	Setting Range	Default
H6-02	Pulse Train Input Scaling	100 to 32000 Hz	1440 Hz

■ H6-03: Pulse Train Input Gain

Sets the level of the input value selected in H6-01 when a pulse train signal with the frequency set in H6-02 is input to terminal RP.

No.	Name	Setting Range	Default
H6-03	Pulse Train Input Gain	0.0 to 1000.0%	100.0%

■ H6-04: Pulse Train Input Bias

Sets the level of the input value selected in H6-01 when no signal (0 Hz) is input to terminal RP.

No.	Name	Setting Range	Default
H6-04	Pulse Train Input Bias	-100.0 to 100.0%	0.0%

■ H6-05: Pulse Train Input Filter Time

Sets the pulse train input filter time constant in seconds.

No.	Name	Setting Range	Default
H6-05	Pulse Train Input Filter Time	0.00 to 2.00 s	0.10 s

■ H6-06: Pulse Train Monitor Selection

Selects the monitor to output as a pulse train signal via terminal MP. Enter the three digits in U□-□□ to indicate which monitor to output. *Refer to U: Monitor Parameters on page 386* for a complete list of monitors. Monitors that can be selected by H6-06 appear in the table below.

No.	Name	Setting Range	Default
H6-06	Pulse Train Monitor Selection	000 <1>, 031 <1>, 101, 102, 105, 116, 501, 502, 801 to 809	102

<1> Set “000” when the terminal is not used or when using the terminal in the through mode.

■ H6-07: Pulse Train Monitor Scaling

Sets the output frequency at terminal MP when the specified monitor item is at 100%. Set H6-06 to 102 and H6-07 to 0 to make the pulse train monitor output synchronous to the output frequency.

No.	Name	Setting Range	Default
H6-07	Pulse Train Monitor Scaling	0 to 32000 Hz	1440 Hz

■ H6-08: Pulse Train Input Minimum Frequency

Sets the minimum output frequency detected by the pulse train input. Increasing this setting reduces the time the drive needs to react to changes in the input signal.

- The pulse input value becomes 0 when the pulse input frequency falls below this level.
- Enabled when H6-01 = 0, 1, or 2.
- When simple speed feedback in V/f Control is set as the function for terminal RP (H6-01 = 3), the minimum frequency becomes the detection time for PG disconnect (F1-14).

No.	Name	Setting Range	Default
H6-08	Pulse Train Input Minimum Frequency	0.1 to 1000.0 Hz	0.5 Hz

5.8 L: Protection Functions

◆ L1: Motor Protection

■ L1-01: Motor Overload Protection Selection

The drive has an electronic overload protection function that estimates the motor overload level based on output current, output frequency, thermal motor characteristics, and time. When the drive detects a motor overload an oL1 fault is triggered and the drive output shuts off.

L1-01 sets the overload protection function characteristics according to the motor being used.

No.	Name	Setting Range	Default
L1-01	Motor Overload Protection Selection	0 to 6	Determined by A1-02

Note:
1. When the motor protection function is enabled (L1-01≠ 0), an oL1 alarm can be output through one of the multi-function outputs by setting H2-01 to 1F. The output closes when the motor overload level reaches 90% of the oL1 detection level.
2. Set L1-01 to a value between 1 and 6 when running a single motor from the drive to select a method to protect the motor from overheat. An external thermal relay is not necessary.

Setting 0: Disabled (Motor Overload Protection Is Not Provided)

Use this setting if no motor overheat protection is desired or if multiple motors are connected to a single drive. If multiple motors are connected to a single drive, install a thermal relay for each motor as shown in *Figure 5.89*.

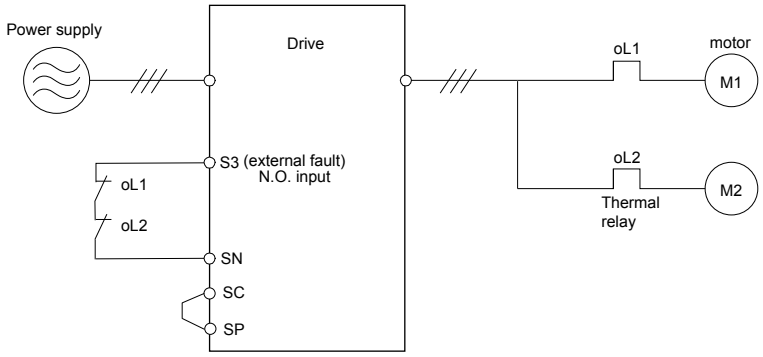

Figure 5.89 Example of Protection Circuit Design for Multiple Motors

NOTICE: *Thermal protection cannot be provided when running multi-motors simultaneously with the same drive, or when using motors with a relatively high current rating compared to other standard motors (such as a submersible motor). Failure to comply could result in motor damage. Disable the electronic overload protection of the drive (L1-01 = "0: Disabled") and protect each motor with individual motor thermal overloads.*

Setting 1: General-purpose Motor (Standard Self-cooled)

Because the motor is self-cooled, the overload tolerance drops when the motor speed is lowered. The drive appropriately adjusts the electrothermal trigger point according to the motor overload characteristics, protecting the motor from overheat throughout the entire speed range.

Overload Tolerance	Cooling Ability	Overload Characteristics
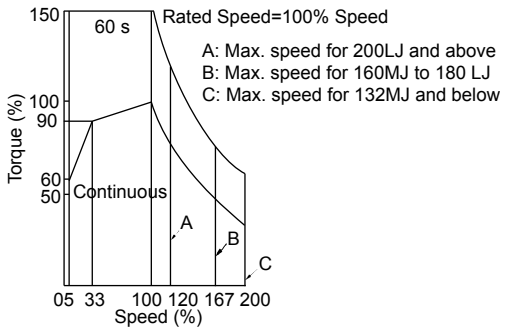	Motor designed to operate from line power. Motor cooling is most effective when running at rated base frequency (check the motor nameplate or specifications).	Continuous operation at less than line power frequency with 100% load can trigger a motor overload fault (oL1). A fault is output and the motor will coast to stop.

Setting 2: Drive Dedicated Motor (Speed Range for Constant Torque: 1:10)

Use this setting when operating a drive duty motor that allows constant torque in a speed range of 1:10. The drive will allow the motor to run with 100% load from 10% up to 100% speed. Running the motor below 10% speed with 100% load will trigger an overload fault.

Overload Tolerance	Cooling Ability	Overload Characteristics
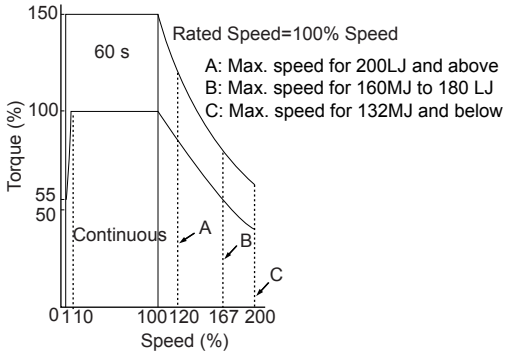	Motor is designed to effectively cool itself even at low speeds.	Continuous operation with 100% load from 6 Hz to E1-06, Motor Base Frequency.

Setting 3: Vector Motor (Speed Range for Constant Torque: 1:100)

Use this setting when operating a drive-dedicated motor that allows constant torque in a speed range of 1:100. This motor type is allowed to run with 100% load from 1% up to 100% speed. Running the motor below 1% speed with 100% load will trigger an overload fault.

Overload Tolerance	Cooling Ability	Overload Characteristics
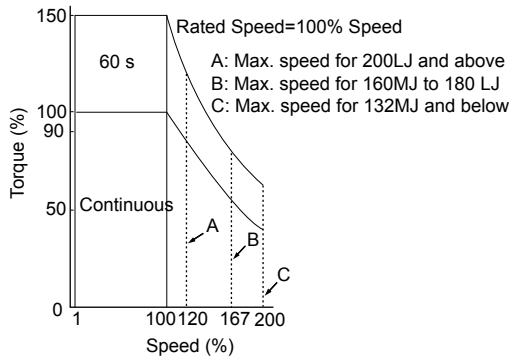	Motor is designed to effectively cool itself at speeds near 0.6 Hz.	Continuous operation with 100% load from 0.6 Hz to E1-06, Motor Base Frequency. Continuous operation below 0.6 Hz may cause an oL1 or oL2 fault.

Setting 4: PM Derated Torque Motor

Use this setting when operating a PM motor. PM motors for derated torque have a self-cooling design and the overload tolerance drops as the motor slows. Electronic thermal overload is triggered in accordance with the motor overload characteristics, providing overheat protection across the entire speed range.

Overload Tolerance	Cooling Ability	Overload Characteristics
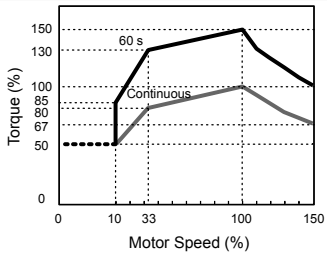	Motor is designed to produce 100% torque at base speed. Built with effective cooling capabilities.	Reaching 100% when operating at below the base frequency causes a motor overload fault (oL1). The drive fault output closes and the motor coasts to stop.

Setting 5: Constant Torque PM Motors (Constant Torque Range of 1:1500)

Sets necessary protection characteristics when driving a PM with constant torque. These motors allow for a speed control from 0.07% to 100% when operating with 100% load. Running the motor below 0.07% speed with 100% load will trigger an overload fault.

Overload Tolerance	Cooling Ability	Overload Characteristics
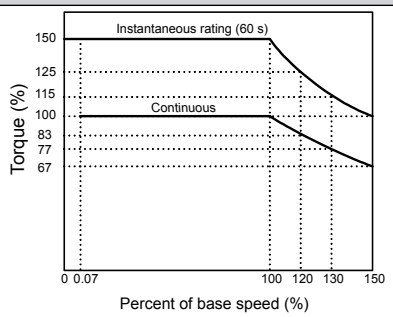	Motor is designed to effectively cool itself at speeds near 0.07% of base speed.	Continuous operation with 100% load from 0.07% to 100% of base speed.

Setting 6: General-purpose Motor

Note: General-purpose motors are designed with a base speed that operates at line frequency (50/60 Hz depending on geographic region).

Because the motor is self-cooled, the overload tolerance drops when the motor speed is lowered. The drive appropriately adjusts the electrothermal trigger point according to the motor overload characteristics and protects the motor from overheat throughout the entire speed range.

Overload Tolerance	Cooling Ability	Overload Characteristics
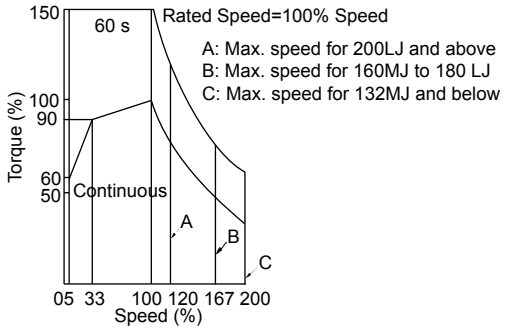	Motor designed to operate from line power. Motor cooling is most effective when running at rated base frequency (check the motor nameplate or specifications)	Continuous operation at less than line power frequency with 100% load can trigger a motor overload fault (oL1). A fault is output and the motor will coast to stop.

■ L1-02: Motor Overload Protection Time

Sets the time for the drive to shut down on motor overload (oL1) when the motor is running with excessive current. Enter the time the motor can withstand operating at 150% current after previously running at 100% current (hot motor overload condition). There is normally no need to change this parameter from the default value.

No.	Name	Setting Range	Default
L1-02	Motor Overload Protection Time	0.1 to 5.0 minutes	1.0 minutes

Defaulted to operate with an allowance of 150% overload operation for one minute in a hot start after continuous operation at 100%.

Figure 5.90 illustrates an example of the electrothermal protection operation time using a general-purpose motor operating at the value of E1-06, Motor Base Speed, with L1-02 set to one minute.

Motor overload protection operates in the area between a cold start and a hot start.

- Cold start: Characteristics of motor protection operation time in response to an overload situation that was suddenly reached when starting a stationary motor.
- Hot start: Characteristics of motor protection operation time in response to an overload situation that occurred while the motor was operating continuously at or below its rated current.

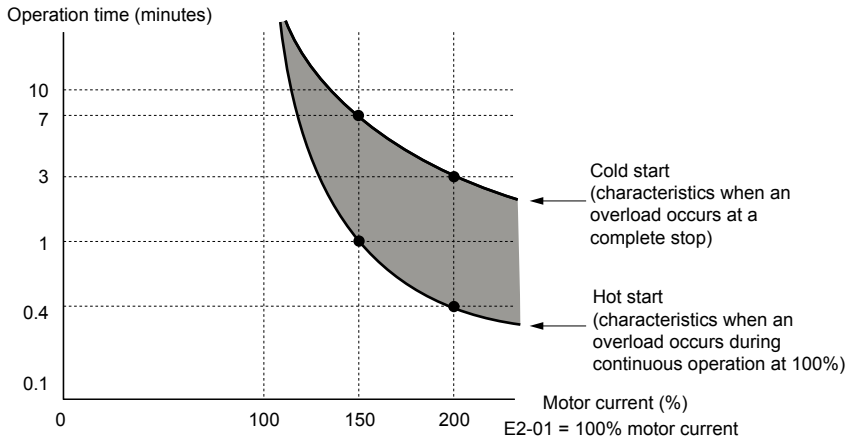

Figure 5.90 Protection Operation Time for General Purpose Motors at the Rated Output Frequency

■ Motor Protection Using a Positive Temperature Coefficient (PTC) Thermistor

Connect a motor PTC can to an analog input of the drive for motor overheat protection.

The motor overheat alarm level triggers an oH3 alarm and the drive continues the operation selected in L1-03. The overheat fault level triggers an oH4 fault, outputs a fault signal, and the drive stops the motor using the stop method selected in L1-04.

Connect the PTC between terminals AC and A3 and set jumper S4 on the terminal board to “PTC” as shown in ***Figure 5.91***. Set H3-05 to 0 and H3-06 to E.

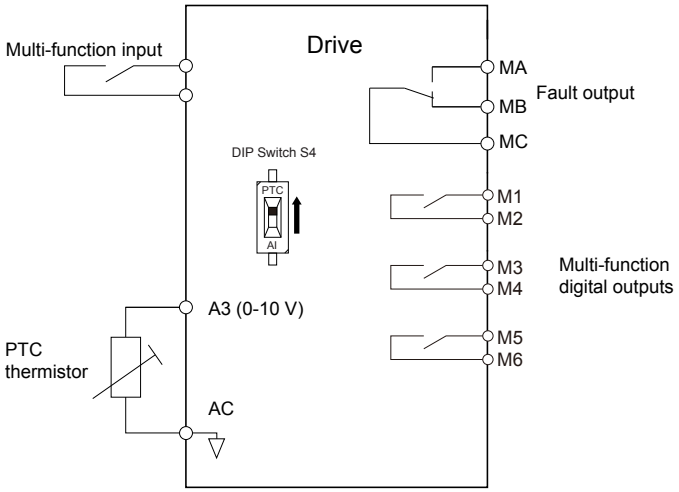

Figure 5.91 Connection of a Motor PTC

The PTC must exhibit the characteristics shown in ***Figure 5.92*** in one motor phase. The motor overload protection of the drive expects 3 of these PTCs to be connected in a series.

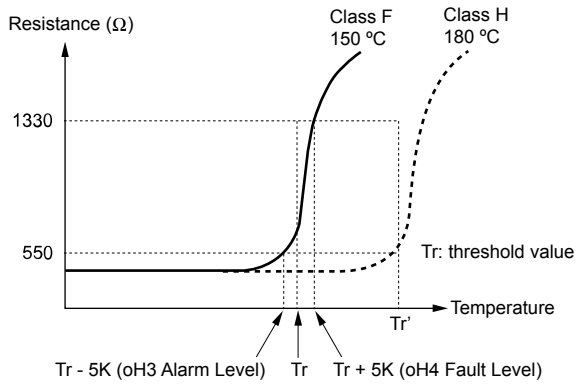

Figure 5.92 Motor PTC Characteristics

Set up overheat detection using a PTC using parameters L1-03, L1-04, and L1-05 as explained in the following sections.

■ L1-03: Motor Overheat Alarm Operation Selection (PTC input)

Sets the drive operation when the PTC input signal reaches the motor overheat alarm level (oH3).

No.	Name	Setting Range	Default
L1-03	Motor Overheat Alarm Operation Selection (PTC input)	0 to 3	3

Setting 0: Ramp to Stop

The drive stops the motor using the deceleration time 1 set in parameter C1-02.

Setting 1: Coast to Stop

The drive output is switched off and the motor coasts to stop.

Setting 2: Fast Stop

The drive stops the motor using the Fast Stop time set in parameter C1-09.

Setting 3: Alarm Only

The operation is continued and an oH3 alarm is displayed on the digital operator.

■ L1-04: Motor Overheat Fault Operation Selection (PTC input)

Sets the drive operation when the PTC input signal reaches the motor overheat fault level (oH4).

No.	Name	Setting Range	Default
L1-04	Motor Overheat Fault Operation Selection (PTC input)	0 to 2	1

Setting 0: Ramp to Stop

The drive stops the motor using the deceleration time 1 set in parameter C1-02.

Setting 1: Coast to Stop

The drive output is switched off and the motor coasts to stop.

Setting 2: Fast Stop

The drive stops the motor using the Fast Stop time set in parameter C1-09.

■ L1-05: Motor Temperature Input Filter Time (PTC input)

Sets a filter on the PTC input signal to prevent erroneous detection of a motor overheat fault.

No.	Name	Setting Range	Default
L1-05	Motor Temperature Input Filter Time (PTC input)	0.00 to 10.00 s	0.20 s

■ L1-08: oL1 Current Level

Sets the reference current for motor thermal overload detection for motor 1 in amperes. When L1-08 is set to 0.0 A (default), parameter E2-01 (E5-03 in PM control modes) is used as the reference for motor overload protection. When L1-08 ≠0.0 A, the set value is used as the reference for motor overload protection.

Note: This parameter is not available in models 4A0930 and 4A1200.

No.	Name	Setting Range	Default
L1-08	oL1 Current Level	0.0 A or 10 to 150% of drive rated current <1> <2>	0.0 A

<1> Display is in the following units:
2A0004 to 2A0040, 4A0002 to 4A0023, and 5A0007 to 5A0017: 0.01 A units.
2A0056 to 2A0415, 4A0031 to 4A0675, and 5A0022 to 5A0242: 0.1 A units.

<2> Cannot be set to a value smaller than 10% of drive rated current when the current level is set to a value greater than 0.0 A.

■ L1-09: oL1 Current Level for Motor 2

Sets the reference current for motor thermal overload detection for motor 2 in amperes. When L1-09 is set to 0.0 A (default), parameter E4-01 is used as the reference for motor overload protection. When L1-09 ≠0.0 A, the set value is used as the reference for motor overload protection.

Note: This parameter is not available in models 4A0930 and 4A1200.

No.	Name	Setting Range	Default
L1-09	oL1 Current Level for Motor 2	0.0 A or 10 to 150% of drive rated current <1> <2>	0.0 A

<1> Display is in the following units:
2A0004 to 2A0040, 4A0002 to 4A0023, and 5A0007 to 5A0017: 0.01 A units.
2A0056 to 2A0415, 4A0031 to 4A0675, and 5A0022 to 5A0242: 0.1 A units.

<2> Cannot be set to a value smaller than 10% of drive rated current when the current level is set to a value greater than 0.0 A.

■ L1-13: Continuous Electrothermal Operation Selection

Determines whether to hold the current value of the electrothermal motor protection (L1-01) when the power supply is interrupted.

No.	Name	Setting Range	Default
L1-13	Continuous Electrothermal Operation Selection	0, 1	1

Setting 0: Disabled

Setting 1: Enabled

■ Motor Protection Using an NTC Thermistor Input

Motor protection is possible for models 4A0930 and 4A1200 by connecting the NTC thermistor input in the motor windings to one of the drive analog input terminals.

This enables the drive to provide torque compensation in response to changes in motor temperature and protect the motor from overheating.

If the NTC input signal using the drive multi-function analog input terminal exceeds the overheat alarm level set to L1-16 (or L1-18 for motor 2), then “oH5” will flash on the digital operator screen. The drive will respond to the alarm according to the setting of L1-20 (default setting is to continue operation when an oH5 alarm occurs).

Figure 5.93 shows a circuit using the NTC thermistor and the terminal resistance values. Set DIP switch S1 on the drive to "V" for voltage input when wiring the NTC thermistor input to terminal A2 on the drive.

Note: This example assumes that H3-10 = 17, H3-09 = 0, and that DIP switch S1 has been set for voltage input.

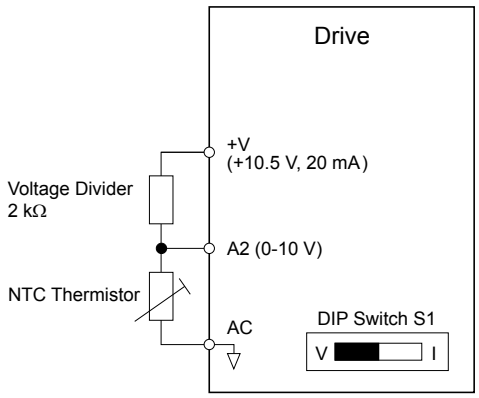

Figure 5.93 Motor Protection Circuit Using NTC Input

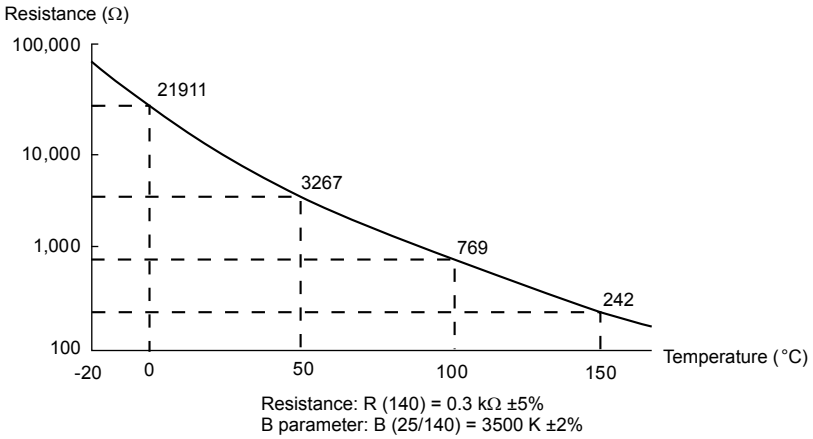

Figure 5.94 Temperature and Resistance of NTC Thermistor

L1-15 to L1-20 can determine the overheat protection settings using the NTC thermistor input. Parameter descriptions are listed below.

■ L1-15: Motor 1 Thermistor Selection (NTC)

Note: This parameter is only available in models 4A0930 and 4A1200.

No.	Name	Setting Range	Default
L1-15	Motor 1 Thermistor Selection (NTC)	0 to 2	0

Setting 0: Disabled

Setting 1: Thermistor Input by Analog Input

Setting 2: Thermistor Input by Special Thermistor Input

■ L1-16: Motor 1 Overheat Temperature

Note: This parameter is only available in models 4A0930 and 4A1200.

Sets the temperature that will trigger an overheat fault (oH5) for motor 1.

No.	Name	Setting Range	Default
L1-16	Motor 1 Overheat Temperature	50 to 200 °C	120 °C

■ L1-17: Motor 2 Thermistor Selection (NTC)

Note: This parameter is only available in models 4A0930 and 4A1200.

No.	Name	Setting Range	Default
L1-17	Motor 2 Thermistor Selection (NTC)	0 to 2	0

Setting 0: Disabled

Setting 1: Thermistor Input by Analog Input

Setting 2: Thermistor Input by Special Thermistor Input

■ L1-18: Motor 2 Overheat Temperature

Note: This parameter is only available in models 4A0930 and 4A1200.

Sets the temperature that will trigger an overheat fault (oH5) for motor 2.

No.	Name	Setting Range	Default
L1-18	Motor 2 Overheat Temperature	50 to 200 °C	120 °C

■ L1-19: Operation Time at Thermistor Disconnect (NTC)

Note: This parameter is only available in models 4A0930 and 4A1200.

Determines drive operation when a thermistor disconnect fault (THo) occurs.

No.	Name	Setting Range	Default
L1-19	Operation Time at Thermistor Disconnect (NTC)	0 to 3	3

Setting 0: Ramp to Stop

The drive stops the motor using the deceleration time set in parameter C1-02.

Setting 1: Coast to Stop

The drive output is switched off and the motor coasts to a stop.

Setting 2: Fast Stop

The drive stops the motor using the Fast stop time set in parameter C1-09.

Setting 3: Alarm Only

The operation is continued and a THo alarm is displayed on the digital operator.

■ L1-20: Operation at Motor Overheat

Note: This parameter is only available in models 4A0930 and 4A1200.

Determines drive operation when a motor overheat fault (oH5) occurs.

No.	Name	Setting Range	Default
L1-20	Operation at Motor Overheat	0 to 3	1

Setting 0: Ramp to Stop

The drive stops the motor using the deceleration time set in parameter C1-02.

Setting 1: Coast to Stop

The drive output is switched off and the motor coasts to a stop.

Setting 2: Fast Stop

The drive stops the motor using the Fast stop time set in parameter C1-09.

Setting 3: Alarm Only

The operation is continued and an oH5 alarm is displayed on the digital operator.

◆ L2: Momentary Power Loss Ride-Thru

■ L2-01: Momentary Power Loss Operation Selection

When a momentary power loss occurs (DC bus voltage falls below the level set in L2-05), the drive can automatically return to the operation it was performing prior to the power loss based on certain conditions.

No.	Name	Setting Range	Default
L2-01	Momentary Power Loss Operation Selection	0 to 5	0

Setting 0: Disabled

If power is not restored within 15 ms, a Uv1 fault will result and the motor coasts to stop.

Setting 1: Recover within L2-02

When a momentary power loss occurs, the drive output will be shut off. If the power returns within the time set to parameter L2-02, the drive will perform Speed Search and attempt to resume operation. If power is not restored within this time (i.e., DC bus voltage level remains below Uv1 detection level L2-05), then a Uv1 fault is triggered and the drive will stop.

Setting 2: Recover as long as CPU Has Power

When a momentary power loss occurs, the drive output will be shut off. If the power returns and the drive control circuit has power, the drive will attempt to perform Speed Search and resume the operation. This will not trigger a Uv1 fault.

Setting 3: Kinetic Energy Backup (KEB) Ride-Thru Operation within L2-02

The drive decelerates using regenerative energy from the motor until the time set in L2-02 has expired. It then tries to accelerate back to the frequency reference. If the power does not return within the time set to L2-02, it will trigger a Uv1 fault and the drive output will shut off. The type of KEB operation is determined by the L2-29 setting.

Setting 4: KEB Ride-Thru as long as CPU Has Power

The drive decelerates using regenerative energy from the motor until the power returns and then restarts. If the motor comes to a stop before the power returns, the drive loses control power and the drive output shuts off. A Uv1 fault is not triggered. The type of KEB operation is determined by the L2-29 setting.

Setting 5: Ramp to Stop with KEB Deceleration

The drive ramps to stop using the regenerative energy from the motor. Even if the power is restored, the drive will continue to decelerate until the motor comes to a complete stop. The type of KEB operation is determined by the L2-29 setting.

Notes on Settings 1 through 5

- “Uv” will flash on the operator while the drive is attempting to recover from a momentary power loss. A fault signal is not output at this time.
- A Momentary Power Loss Unit is available to allow for a longer momentary power loss ride through time in models 2A0004 to 2A0056 and 4A0002 to 4A0031. This option makes it possible to continue running the drive after up to two seconds of power loss.
- When using a magnetic contactor between the motor and the drive, keep the magnetic contactor closed as long as the drive performs KEB operation or attempts to restart with Speed Search.
- Keep the Run command active during KEB operation or the drive cannot accelerate back to the frequency reference when the power returns.
- When L2-01 is set to 3, 4, or 5, KEB Ride-Thru will be executed as specified in L2-29.

■ KEB Ride-Thru Function

When the drive detects a power loss, KEB Ride-Thru decelerates the motor and uses regenerative energy to keep the main circuit operating. Despite power loss, the drive output is not interrupted.

Choose between Single Drive KEB Ride-Thru 1 and 2 (L2-29 = 0 or 1) for applications driven by a single drive.

Choose between System KEB Ride-Thru 1 and 2, (L2-29 = 2 or 3) for applications where multiple drives have to perform KEB operation while keeping a certain speed ratio.

Single Drive KEB Ride-Thru 1 (L2-29 = 0)

After KEB Ride-Thru begins, the drive uses regenerative energy from the motor to keep the DC bus voltage at the level set to L2-11 while adjusting the rate of deceleration based on the time set to C1-09. The user must set C1-09 properly to prevent Uv1 and ov faults.

Note: Shorten the Fast Stop Time (C1-09) if undervoltage (Uv1) occurs in the DC bus. Increase the KEB deceleration time if overvoltage (ov) occurs.

Single Drive KEB Ride-Thru 2 (L2-29 = 1)

The drive uses information about the inertia of the connected machinery to determine the deceleration rate necessary to keep the DC bus voltage at the level set in parameter L2-11. The resulting deceleration time is calculated based on the system inertia and cannot be adjusted.

System KEB Ride-Thru 1 (L2-29 = 2)

The drive decelerates at the KEB deceleration time set to L2-06. L2-06 is the time required to decelerate from the current frequency reference to 0. Using this setting, multiple drives can decelerate while keeping the speed ratio constant between those drives. This function requires a braking resistor and disregards the voltage level in the DC bus.

System KEB Ride-Thru 2 (L2-29 = 3)

The drive decelerates based on the KEB deceleration time set to L2-06 while monitoring the DC bus voltage. If the voltage level rises, the drive briefly holds the frequency before continuing to decelerate.

■ KEB Ride-Thru Start

KEB operation is triggered independently of the selected KEB operation mode. When the KEB function is selected as the function to be executed when power loss operation occurs (L2-01 = 3, 4, or 5), then KEB Ride-Thru will be activated if one of the following conditions becomes true:

- A digital input programmed for H1-□□ = 65 or 66 is activated. This will start KEB operation using the mode selected in parameter L2-29.
- A digital input programmed for H1-□□ = 7A or 7B is activated. This will automatically select Single KEB Ride-Thru 2, disregarding the setting of L2-29.
- The DC bus voltage fell below the level specified in L2-05. The KEB operation will start as specified in L2-29.

Note: Attempting to simultaneously assign KEB Ride-Thru 1 and 2 to input terminals will trigger an oPE3 error.

When using a digital input to trigger KEB operation and the device controlling the input acts relatively slow, set a minimum KEB operation time in parameter L2-10. In the example below, the DC bus voltage triggers KEB operation and a digital input triggers the Hold command.

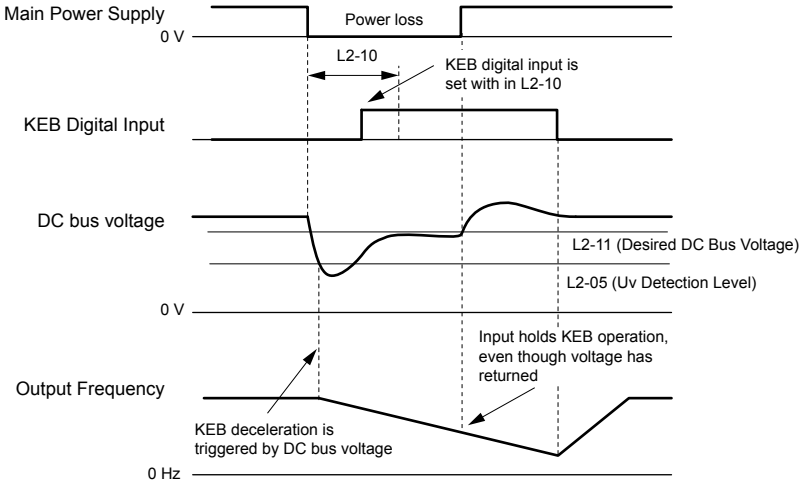

Figure 5.95 KEB Operation Using a KEB Input

■ KEB Ride-Thru End Detection

The KEB function end detection depends on the setting of parameter L2-01 and whether a digital input programmed for KEB (H1-□□ = 65, 66, 7A, 7B) is used.

KEB Ride-Thru Operation in L2-02, Input Terminals Not Used

Here, L2-01 = 3 and the input terminals have not been set for KEB Ride-Thru (H1-□□ does not equal 65, 66, 7A, 7B). After decelerating for the time set in parameter L2-02, the drive ends KEB operation and attempts to accelerate back to the frequency reference. A Uv1 fault occurs and the drive output shuts off if the power does not return within the time set to L2-02.

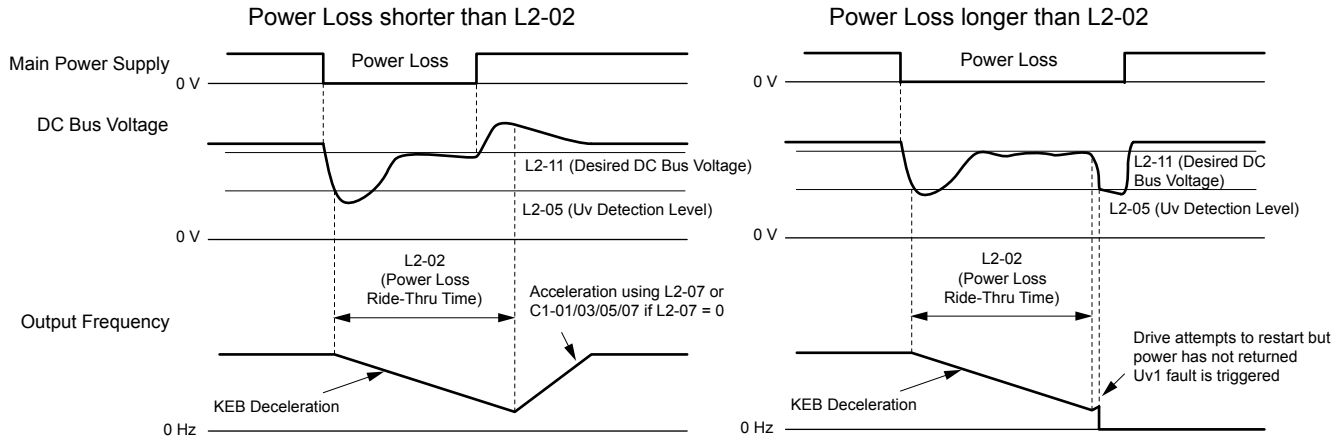

Figure 5.96 KEB Operation Using L2-02, Without KEB Input

KEB Ride-Thru Operation Within L2-02, Input Terminals Used

Here, L2-01 = 3 and an input terminal is set to issue KEB Ride-Thru (H1-□□ = 65, 66, 7A, 7B). After decelerating for the time set in parameter L2-02, the drive checks the DC bus voltage and the status of the digital input. If the DC bus voltage is still below the level set in L2-11 or if the KEB digital input is still active, KEB deceleration continues. If the voltage level has risen above the value set to L2-11, then normal operation is resumed.

Note: If L2-10 is set to a longer time than L2-02, the drive checks the DC bus voltage level and the status of the terminal assigned to KEB Ride-Thru after the time set to L2-02 passes. The drive will then try to restart.

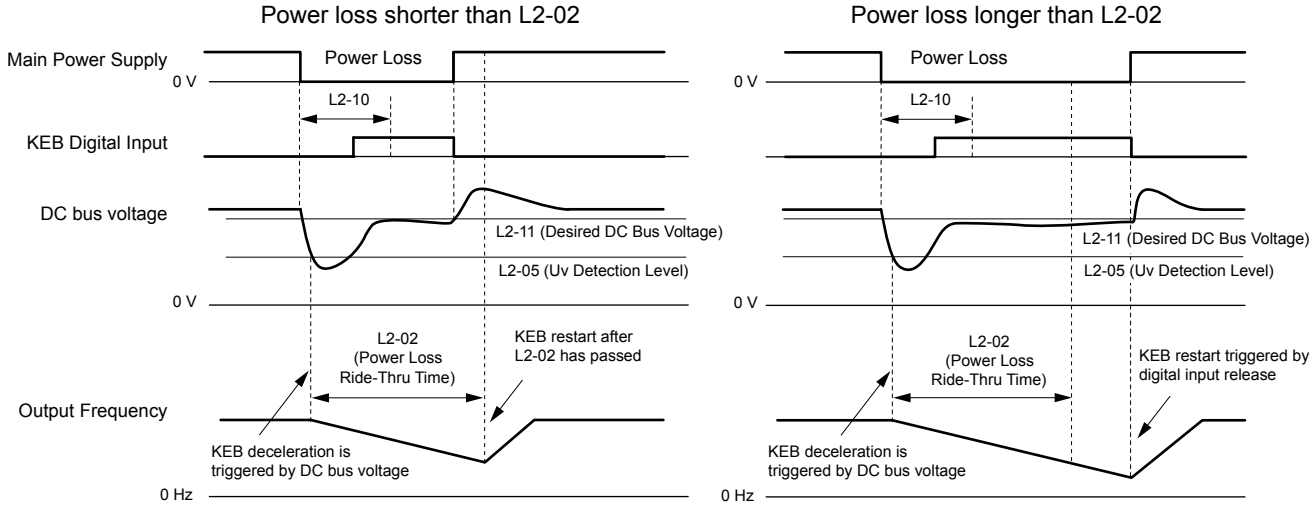

Figure 5.97 KEB Operation Using L2-02 and KEB Input

KEB Ride-Thru Operation as Long as CPU Has Power, KEB Input Not Used

Here, L2-01 = 4 and the input terminals have not been set for KEB Ride-Thru (H1-□□ does not equal 65, 66, 7A, 7B). After decelerating for the time set to parameter L2-10, the drive checks the DC bus voltage level. Deceleration continues if the DC bus voltage is lower than the level set in L2-11. Normal operation resumes when the DC bus voltage rises above the value of L2-11.

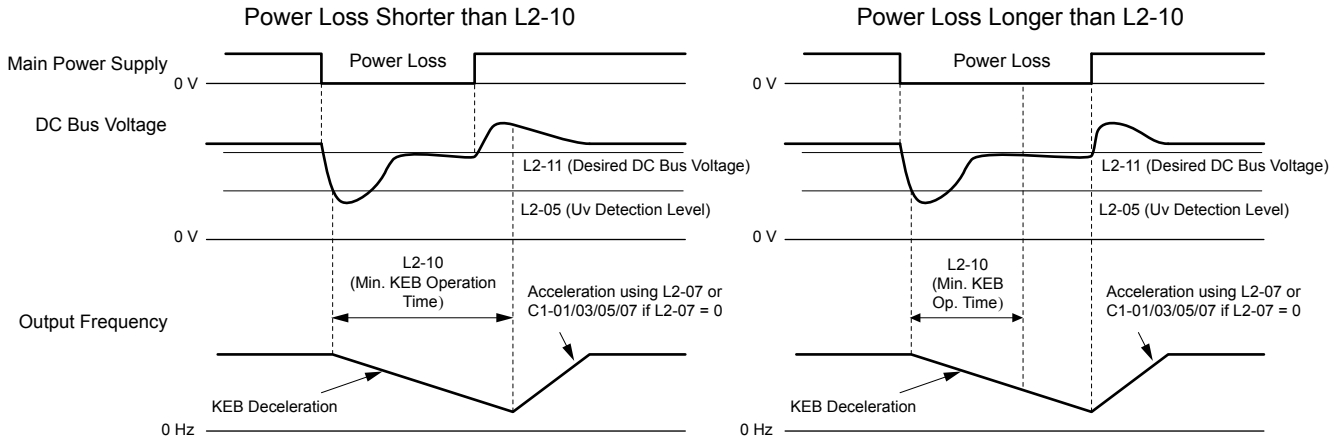

Figure 5.98 KEB Operation Using L2-10, Without KEB Input

KEB Ride-Thru Operation as Long as CPU Has Power, KEB Input Used

Here, L2-01 = 3 and an input terminal is set to issue KEB Ride-Thru (H1-□□ = 65, 66, 7A, 7B). After decelerating for the time set to parameter L2-10, the drive checks the DC bus voltage and the status of the digital input. Deceleration continues if the DC bus voltage is still below the level set in L2-11 or if the digital input assigned to KEB Ride-Thru is still active. Normal operation resumes when the DC bus voltage rises above the value of L2-11 and the terminal that initiated KEB Rid-Thru is released.

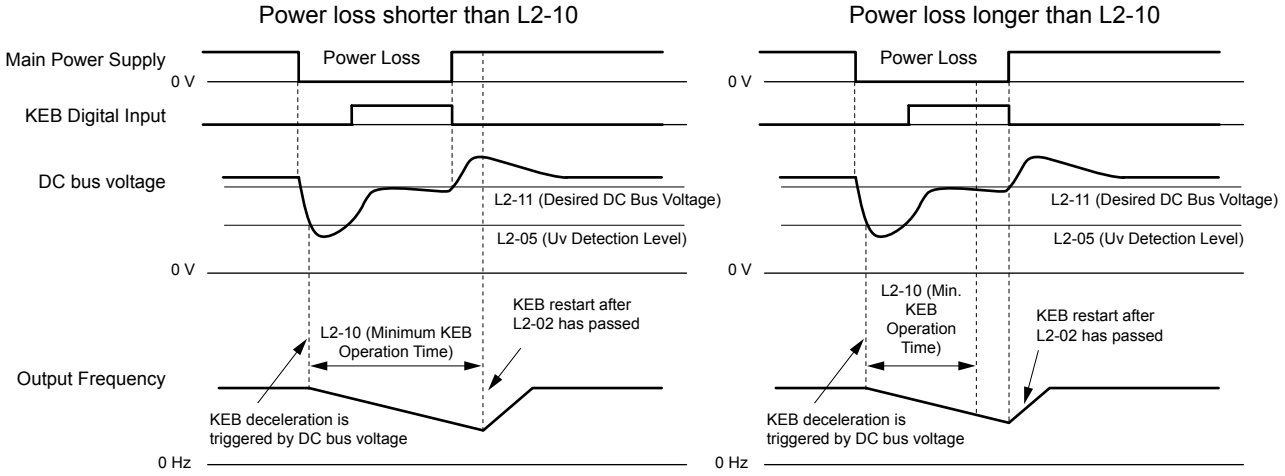

Figure 5.99 KEB Operation Using L2-10 and KEB Input

L2-01 = 5

KEB operation ends when the motor has come to a stop, even if the power returns and the digital input terminal that initiated KEB Ride-Thru is cleared.

■ KEB Operation Wiring Example

Figure 5.100 shows a wiring example to trigger the KEB Ride-Thru at power loss using an undervoltage relay. When a power loss occurs, the undervoltage relay triggers KEB Ride-Thru at terminal S6 (H1-06 = 65, 66, 7A, 7B). Note that using System KEB Ride-Thru requires an additional dynamic braking option.

Note:
1. Do not switch off the Run command during momentary power loss. If the Run command is shut off, the drive will not accelerate back to speed when the power is restored.
2. A dynamic braking option is required to use System KEB 1 (L2-29 = 2).

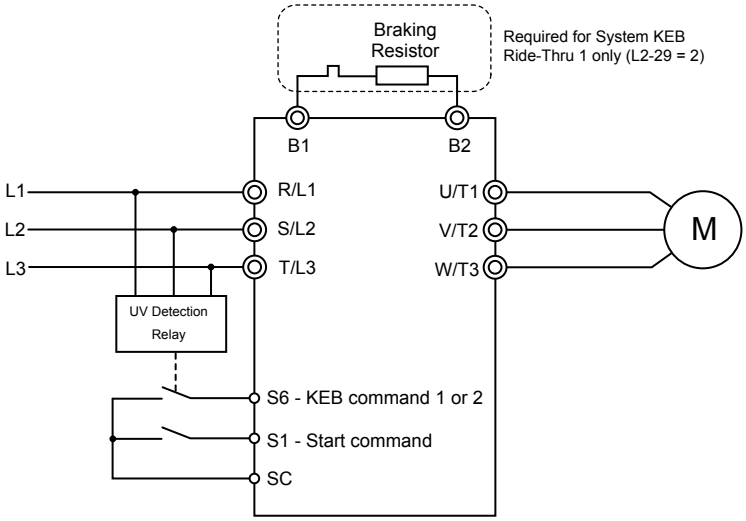

Figure 5.100 KEB Function Wiring Example

■ Parameters for KEB Ride-Thru

Table 5.43 lists parameters needed to set up KEB Ride-Thru depending on the type of KEB Ride-Thru selected in L2-29.

Table 5.43 KEB Function Related Adjustments

Parameter	Name	Setting Instructions	KEB Mode (L2-29)			
			0	1	2	3
C1-09	Fast Stop Time	• Increase if an overvoltage fault occurs during KEB deceleration. • Decrease if an undervoltage fault occurs during KEB deceleration.	YES	NO	NO	NO
C2-03	S-Curve at Deceleration Start	• Shorten if undervoltage occurs immediately after KEB Ride-Thru is triggered. • Lengthen this setting if overvoltage occurs immediately after KEB operation starts.	YES	NO	YES	YES
L2-05	Undervoltage Detection Level	Increase if an undervoltage fault occurs at KEB operation start to let the drive detect power loss more quickly.	YES	YES	YES	YES
L2-06	KEB Deceleration Time	• Increase if an overvoltage fault occurs during KEB deceleration • Decrease if an undervoltage fault occurs during KEB deceleration	NO	NO	YES	YES
L2-07	KEB Acceleration Time	Adjust to the desired acceleration time. If set to 0, standard acceleration times are used (C1-01, C1-03, C1-05, C1-07).	YES	YES	YES	YES
L2-08	Frequency Gain at KEB Start	• Increase if an undervoltage fault occurs immediately after KEB operation starts. • Decrease if an overvoltage fault occurs immediately after KEB operation starts.	YES	NO	YES	YES
L2-10	KEB Detection Time	• Increase when a digital input is set for KEB Ride-Thru and an undervoltage fault occurs after power was lost because the device controlling the input does not react quickly enough. • If the DC bus voltage overshoots after KEB Ride-Thru begins (and no input terminal is set to KEB Ride-Thru), increase L2-10 to longer than the overshoot.	YES	YES	YES	YES
L2-11	Desired DC Bus Voltage during KEB	• Set to approximately 1.22 times the input voltage for Single Drive KEB Ride-Thru 2. • Set to approximately 1.4 times the input voltage for Single Drive KEB Ride-Thru 1 and System KEB Ride-Thru modes.	YES	YES	YES	YES
L3-20	Main Circuit Adjustment Gain	• Increase this setting in steps of 0.1 if overvoltage or undervoltage occurs at the beginning of deceleration • Reduce if torque ripple occurs during deceleration while executing KEB Ride-Thru.	NO	YES	NO	NO

Parameter	Name	Setting Instructions	KEB Mode (L2-29)			
			0	1	2	3
L3-21	Accel/Decel Rate Calculation Gain	• Reduce L3-21 in steps of 0.05 if there is a fairly large speed or current ripple. • Decreasing this setting too much can cause a slow DC bus voltage control response, and may lead to problems with overvoltage or undervoltage.	NO	YES	NO	NO
L3-24	Motor Acceleration Time	Set the motor acceleration time as described on page *351*.	NO	YES	NO	NO
L3-25	Load Inertia Ratio	Set the load/inertia ratio as described on page *351*.	NO	YES	NO	NO

■ L2-02: Momentary Power Loss Ride-Thru Time

Sets the maximum time allowed to ride through a power loss. If power loss operation exceeds this time, the drive will attempt to accelerate back to the frequency reference. This parameter is valid if L2-01 = 1 or 3.

Note: The amount of time the drive is capable of recovering after a power loss is determined by the capacity of the drive. Drive capacity determines the upper limit for L2-02.

No.	Name	Setting Range	Default
L2-02	Momentary Power Loss Ride-Thru Time	0.0 to 25.5 s	Determined by C6-01 and o2-04

■ L2-03: Momentary Power Loss Minimum Baseblock Time

Sets the minimum baseblock time when power is restored following a momentary power loss. This determines the time the drive waits for the residual voltage in the motor to dissipate. Increase this setting if overcurrent or overvoltage occurs at the beginning of Speed Search, after a power loss, or during DC Injection Braking.

No.	Name	Setting Range	Default
L2-03	Momentary Power Loss Minimum Baseblock Time	0.1 to 5.0 s	Determined by C6-01 and o2-04

■ L2-04: Momentary Power Loss Voltage Recovery Ramp Time

Sets the time for the drive to restore the output voltage to the level specified by the V/f pattern after Speed Search. The setting value determines the time for the voltage to go from 0 V to the maximum voltage.

No.	Name	Setting Range	Default
L2-04	Momentary Power Loss Voltage Recovery Ramp Time	0.0 to 5.0 s	Determined by C6-01 and o2-04

■ L2-05: Undervoltage Detection Level (Uv)

Determines the voltage at which a Uv1 fault is triggered or at which the KEB function is activated. This setting rarely needs to be changed.

No.	Name	Setting Range	Default
L2-05	Undervoltage Detection Level	150 to 210 Vdc <1>	Determined by E1-01 <2>

<1> Values are specific to 200 V class drives. Double the value for 400 V class drives. Multiply the value by 2.875 for 600 V class drives.

<2> The default setting for 400 V class drives depends on whether the drive input voltage is over 400 V or under 400 V.

Note:
1. Install an AC reactor option on the input side of the power supply when setting L2-05 below the default value to prevent damage to drive circuitry.
2. If using KEB Ride-Thru and L2-05 is set too low, then undervoltage in the DC bus (Uv1) will be triggered before KEB Ride-Thru can be executed. Take caution not to set this value too low.

■ L2-06: KEB Deceleration Time

Sets the time to decelerate from the frequency reference at the time KEB Ride-Thru was initiated to zero speed. This setting can be used only when L2-29 = 2 (System KEB Ride-Thru 1).

No.	Name	Setting Range	Default
L2-06	KEB Deceleration Time	0.00 to 6000.0 s <1>	0.00 s

<1> Setting range is determined by the accel/decel time units set in C1-10. If the time is set in units of 0.01 s (C1-10 = 0), the setting range becomes 0.00 to 600.00 s.

■ L2-07: KEB Acceleration Time

Sets the time to reaccelerate from the speed when KEB was deactivated to the frequency reference.

When set to 0.0 s, the drive will accelerate to speed according to the active acceleration time set by C1-01, C1-03, C1-05, or C1-07.

No.	Name	Setting Range	Default
L2-07	KEB Acceleration Time	0.00 to 6000.0 s <1>	0.00 s

<1> Setting range is determined by the accel/decel time units set in C1-10. If the time is set in units of 0.01 s (C1-10 = 0), the setting range becomes 0.00 to 600.00 s.

■ L2-08: Frequency Gain at KEB Start

When the KEB Ride-Thru command is input, the output frequency is reduced in a single step to quickly get the motor into a regenerative state. Calculate the amount of this frequency reduction using the formula below. L2-08 can only be used with induction motors.

Amount of reduction = Slip frequency prior to KEB × (L2-08/100) × 2

No.	Name	Setting Range	Default
L2-08	Frequency Gain at KEB Start	0 to 300%	100%

■ L2-10: KEB Detection Time (Minimum KEB Time)

Determines the duration of KEB Ride-Thru operation after it is triggered. *Refer to KEB Ride-Thru End Detection on page 340* for details.

No.	Name	Setting Range	Default
L2-10	KEB Detection Time	0 to 2000 ms	50 ms

■ L2-11: DC Bus Voltage Setpoint during KEB

Determines the setpoint (target value) for the DC bus voltage during Single KEB Ride-Thru 2. For Single KEB Ride-Thru 1 and System KEB Ride-Thru, parameter L2-11 defines the voltage level to end KEB Ride-Thru.

No.	Name	Setting Range	Default
L2-11	DC Bus Voltage Setpoint during KEB	150 to 400 Vdc <1>	[E1-01] × 1.22

<1> Values are specific to 200 V class drives. Double the value for 400 V class drives. Multiply the value by 2.875 for 600 V class drives, but set the value below 1040 Vdc (overvoltage protection level).

■ L2-29: KEB Method Selection

Selects the way the Kinetic Energy Buffering function operates.

Note: If a multi-function input is set for Single KEB Ride-Thru 2 (H1-□□ = 7A, 7B), the setting of L2-29 is disregarded and the KEB mode equal to L2-29 = 1 is automatically selected.

No.	Name	Setting Range	Default
L2-29	KEB Method Selection	0 to 3	0

Setting 0: Single Drive KEB Ride-Thru 1

Setting 1: Single Drive KEB Ride-Thru 2

Setting 2: System KEB Ride-Thru 1

Setting 3: System KEB Ride-Thru 2

Refer to KEB Ride-Thru Function on page 339 for detailed explanations.

◆ L3: Stall Prevention

The motor may experience excessive slip because it cannot keep up with the frequency reference when the load is too high or acceleration and deceleration times are too short. If the motor slips during acceleration, it usually causes an overcurrent fault (oC), drive overload (oL2), or motor overload (oL1). If the motor slips during deceleration, it can cause excessive regenerative

power to flow back into the DC bus capacitors, and eventually cause the drive to fault out from overvoltage (ov). The Stall Prevention Function prevents the motor from stalling and while allowing the motor to reach the desired speed without requiring the user to change the acceleration or deceleration time settings. The Stall Prevention function can be set separately for acceleration, operating at constant speeds, and deceleration.

■ L3-01: Stall Prevention Selection during Acceleration

Stall Prevention during acceleration prevents tripping with overcurrent (oC), motor overload (oL1), or drive overload (oL2) faults common when accelerating with heavy loads.

L3-01 determines the type of Stall prevention the drive should use during acceleration.

No.	Name	Setting Range	Default
L3-01	Stall Prevention Selection during Acceleration	0 to 2 <1>	1

<1> Setting 2 is not available for OLV/PM.

Setting 0: Disabled

No Stall Prevention is provided. If the acceleration time is too short, the drive may not be able to get the motor up to speed fast enough, causing an overload fault.

Setting 1: Enabled

Enables Stall Prevention during acceleration. Operation varies depending on the control mode.

- V/f Control, V/f Control with PG, and Open Loop Vector Control:

  Acceleration is reduced when the output current value exceeds 85% of the level set to parameter L3-02 for a longer than the time set to L3-27. The acceleration stops when the current exceeds L3-02. Acceleration continues when the current falls below L3-02 for longer than the time set to L3-27.

  The Stall Prevention level is automatically reduced in the constant power range. ***Refer to L3-03: Stall Prevention Limit during Acceleration on page 347***.

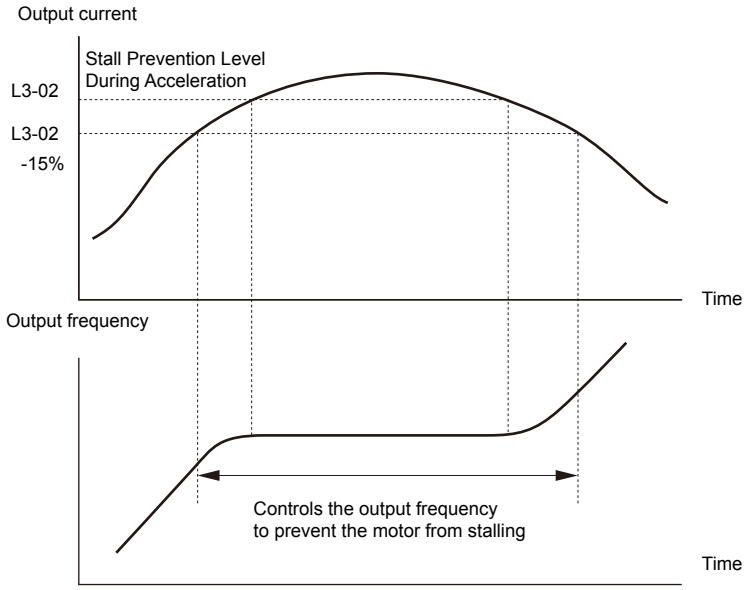

Figure 5.101 Stall Prevention During Acceleration for Induction Motors

- Open Loop Vector Control for PM:

  Acceleration stops when the output current reaches the level set to parameter L3-02. When the time set to parameter L3-27 passes, the drive decelerates using the deceleration time set to L3-22 (***Refer to L3-22: Deceleration Time at Stall Prevention during Acceleration on page 347***). Deceleration stops when the current falls below 85% of L3-02,. The drive will attempt to reaccelerate after the time set to L3-27.

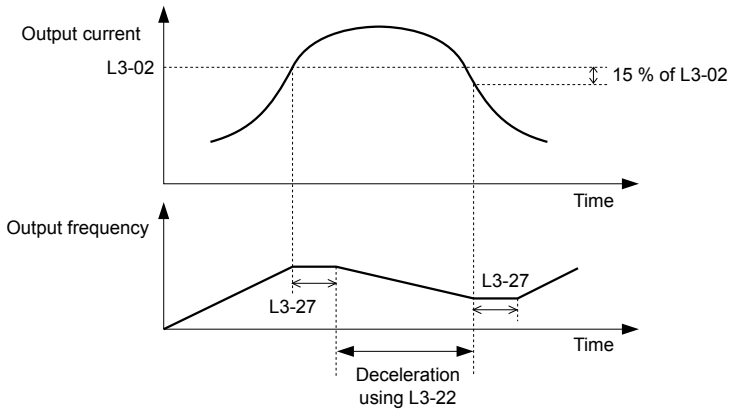

Figure 5.102 Stall Prevention During Acceleration for Permanent Magnet Motors

Setting 2: Intelligent Stall Prevention

The drive disregards the selected acceleration time and attempts to accelerate in the minimum time. The acceleration rate is adjusted so the current does not exceed the value set to parameter L3-02.

■ L3-02: Stall Prevention Level during Acceleration

Sets the output current level at which the Stall Prevention during acceleration is activated.

No.	Name	Setting Range	Default
L3-02	Stall Prevention Level during Acceleration	0 to 150% <1>	<1>

<1> The upper limit and default value is determined by the duty rating and the carrier frequency derating selection (C6-01 and L8-38 respectively).

- Lower L3-02 if stalling occurs when using a motor that is relatively small compared to the drive.
- Also set parameter L3-03 when operating the motor in the constant power range.

■ L3-03: Stall Prevention Limit during Acceleration

The Stall Prevention level is automatically reduced when the motor is operated in the constant power range. L3-03 sets the lower limit for this reduction as a percentage of the drive rated current.

No.	Name	Setting Range	Default
L3-03	Stall Prevention Limit during Acceleration	0 to 100%	50%

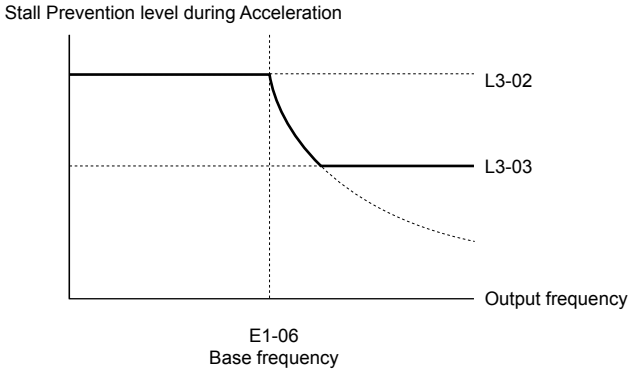

Figure 5.103 Stall Prevention Level and Limit During Acceleration

■ L3-22: Deceleration Time at Stall Prevention during Acceleration

Sets the brief deceleration time used when stalling occurs while accelerating a PM motor. When set to 0, this function is disabled and the drive decelerates at the selected deceleration time when stalling occurs.

The function is effective only in OLV/ PM control and when parameter L3-01 is set to 1.

No.	Name	Setting Range	Default
L3-22	Deceleration Time at Stall Prevention During Acceleration	0.0 to 6000.0 s	0.0 s

■ L3-04: Stall Prevention Selection during Deceleration

Stall Prevention during deceleration controls the deceleration based on the DC bus voltage and prevents an overvoltage fault caused by high inertia or rapid deceleration.

No.	Name	Setting Range	Default
L3-04	Stall Prevention Selection During Deceleration	0 to 5 <1>	1

<1> Settings 3 through 5 are not available in OLV/PM. Settings 2 through 5 are not available in AOLV/PM and CLV/PM. Setting 3 is not available in models 4A0930 or 4A1200.

Setting 0: Disabled

The drive decelerates according to the set deceleration time. With high inertia loads or rapid deceleration, an overvoltage fault may occur. If an overvoltage fault occurs, use dynamic braking options or switch to another L3-04 selection.

Setting 1: General-purpose Stall Prevention

The drive tries to decelerate within the set deceleration time. The drive pauses deceleration when the DC bus voltage exceeds the Stall Prevention level and then continues deceleration when the DC bus voltage drops below that level. Stall Prevention may be triggered repeatedly to avoid an overvoltage fault. The DC bus voltage level for Stall Prevention depends on the input voltage setting E1-01.

Drive Input Voltage	Stall Prevention Level during Deceleration
200 V Class	377 Vdc
400 V Class	754 Vdc
600 V Class	1084 Vdc

Note:
1. Do not use this setting in combination with a Dynamic Braking Resistor or other dynamic braking options. If Stall Prevention during deceleration is enabled, it will be triggered before the braking resistor option can operate.
2. This method may lengthen the total deceleration time compared to the set value. If this is not appropriate for the application consider using a dynamic braking option.

Figure 5.104 illustrates the function of Stall Prevention during deceleration.

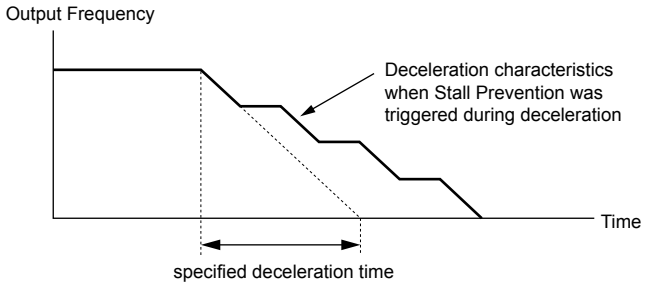

Figure 5.104 Stall Prevention During Deceleration

Setting 2: Intelligent Stall Prevention

The drive adjusts the deceleration rate to maintain the DC bus voltage at the level set to parameter L3-17. The drive ignores the selected deceleration time and uses the shortest possible deceleration time that will not cause the motor to stall.

This function uses the following parameters for adjusting the deceleration rate:

- DC bus voltage gain (L3-20)
- Deceleration rate calculations gain (L3-21)
- Inertia calculations for motor acceleration time (L3-24)
- Load inertia ratio (L3-25)

Note: The deceleration time is not constant. Do not use Intelligent Stall Prevention in applications where stopping accuracy is a concern. Use dynamic braking options instead.

Setting 3: Stall Prevention with Dynamic Braking Option

Enables the Stall Prevention function while using a dynamic braking resistor. Overvoltage problems in the DC bus can occur if Stall Prevention during deceleration is disabled (L3-04) in OLV and a dynamic braking option is installed. Set L3-04 to 3 to remedy this situation.

Setting 4: Overexcitation Deceleration 1

Decelerates with the set deceleration rate in an overexcitation state (increasing the motor flux). The motor will decelerate when Stall Prevention is disabled (L3-04). Setting 4 changes the selected decel time and functions to provide protection from an overvoltage trip. ***Refer to Overexcitation Deceleration (Induction Motors) on page 369*** for details.

Setting 5: Overexcitation Deceleration 2

Overexcitation Deceleration 2 slows down the motor while trying to maintain the DC bus voltage at the level set to parameter L3-17. This function shortens the achievable deceleration time more than by using Overexcitation Deceleration 1. Setting 5 will shorten/lengthen the decel time to maintain the L3-17 bus level. ***Refer to Overexcitation Deceleration (Induction Motors) on page 369*** for details.

■ L3-05: Stall Prevention Selection during Run

Determines how Stall Prevention works during Run. Stall Prevention during run prevents the motor from stalling by automatically reducing the speed when a transient overload occurs while the motor is running at constant speed.

No.	Name	Setting Range	Default
L3-05	Stall Prevention Selection During Run	0 to 2	1

Note: **1.** This parameter is available in V/f, V/f w/PG, and OLV/PM.
2. Stall Prevention during run is disabled when the output frequency is 6 Hz or lower regardless of the L3-05 and L3-06 settings.

Setting 0: Disabled

Drive runs at the set frequency reference. A heavy load may cause the motor to stall and trip the drive with an oC or oL fault.

Setting 1: Decelerate Using C1-02

If the current exceeds the Stall Prevention level set in parameter L3-06, the drive will decelerate at decel time 1 (C1-02). When the current level drops below the value of L3-06 minus 2% for 100 ms, the drive accelerates back to the frequency reference at the active acceleration time.

Setting 2: Decelerate Using C1-04

Same as setting 1 except the drive decelerates at decel time 2 (C1-04).

■ L3-06: Stall Prevention Level during Run

Sets the current level to trigger Stall Prevention during run. Depending on the setting of parameter L3-23, the level is automatically reduced in the constant power range (speed beyond base speed). A setting of 100% is equal to the drive rated current.

The Stall Prevention level can be adjusted using an analog input. ***Refer to Multi-Function Analog Input Terminal Settings on page 323*** for details.

No.	Name	Setting Range	Default
L3-06	Stall Prevention Level During Run	30 to 150% <1>	<1>

<1> The upper limit and default for this setting is determined by C6-01 and L8-38.

■ L3-23: Automatic Reduction Selection for Stall Prevention during Run

Reduces the Stall Prevention during run level in the constant power range.

No.	Name	Setting Range	Default
L3-23	Automatic Reduction Selection for Stall Prevention During Run	0, 1	0

Setting 0: Disabled

The level set in L3-06 is used throughout the entire speed range.

Setting 1: Enabled

The Stall Prevention level during run is reduced in the constant power range. The lower limit will be 40% of L3-06.

■ Overvoltage Suppression Function

Suppresses overvoltage faults by decreasing the regenerative torque limit and slightly increasing the output frequency when the DC bus voltage rises. This function can drive loads with cyclic regenerative operation, such as a punch press or other applications that involve repetitive crank movements.

The regenerative torque limit and the output frequency are adjusted during ov suppression so that the DC bus voltage does not exceed the level set to parameter L3-17. In addition to the parameters explained below, ov suppression also uses these settings for frequency adjustment:

- DC bus voltage gain (L3-20)
- Deceleration rate calculations gain (L3-21)
- Inertia calculations for motor acceleration time (L3-24)
- Load inertia ratio (L3-25)

Note:
1. The motor speed will exceed the frequency reference when overvoltage suppression is triggered. Consequently, overvoltage suppression is not appropriate in applications that require a perfect match between the frequency reference and the motor speed.
2. Disable overvoltage suppression when using a braking resistor.
3. Overvoltage may still occur if there is a sudden increase to a regenerative load.
4. This function is enabled only when operating just below the maximum frequency. Overvoltage suppression does not increase the output frequency beyond the maximum frequency. If the application requires this, increase the maximum frequency and change the base frequency setting.

■ L3-11: Overvoltage Suppression Function Selection

Enables or disables the overvoltage suppression function.

No.	Name	Setting Range	Default
L3-11	Overvoltage Suppression Function Selection	0, 1	0

Setting 0: Disabled

The regenerative torque limit and the output frequency are not adjusted. A regenerative load may trip the drive with an overvoltage fault. Use this setting if dynamic braking options are installed.

Setting 1: Enabled

When the DC bus voltage rises due to regenerative load, an overvoltage fault is prevented by decreasing the regenerative torque limit and increasing the output frequency.

■ L3-17: Target DC Bus Voltage for Overvoltage Suppression and Stall Prevention

Sets the target DC bus voltage level used by the overvoltage suppression function (L3-11 = 1), Intelligent Stall Prevention during deceleration (L3-04 = 2).

No.	Name	Setting Range	Default
L3-17	Target DC Bus Voltage for Overvoltage Suppression and Stall Prevention	150 to 400 Vdc <1>	375 Vdc <1> <2>

<1> Values are specific to 200 V class drives. Double the value for 400 V class drives. Multiply the value by 2.875 for 600 V class drives, but set the value below 1040 Vdc (overvoltage protection level).

<2> This value is initialized when E1-01 is changed.

■ L3-20: DC Bus Voltage Adjustment Gain

Determines the proportional gain used by overvoltage suppression (L3-11 = 1), Single Drive KEB 2 (L2-29 = 1), KEB Ride-Thru 2 (H1-□□ = 7A or 7B) ,and Intelligent Stall Prevention during deceleration (L3-04 = 2) to control the DC bus voltage.

No.	Name	Setting Range	Default
L3-20	DC Bus Voltage Adjustment Gain	0.00 to 5.00	Determined by A1-02

Adjustment for Single Drive KEB 2 (L2-29 = 1) and Intelligent Stall Prevention during Deceleration

- Increase this setting slowly in steps of 0.1 if overvoltage or undervoltage occurs at the beginning of deceleration.
- Decrease this setting if there is a fair amount of speed or torque ripple.

Adjustment for Overvoltage Suppression

- Increase this setting slowly in steps of 0.1 if overvoltage suppression is enabled (L3-11 = 1) and a sudden increase in a regenerative load causes an overvoltage fault.

- Decrease this setting if there is a fair amount of speed or torque ripple.

■ L3-21: Accel/Decel Rate Calculation Gain

Determines the proportional gain used by overvoltage suppression (L3-11 = 1), Single Drive KEB 2 (L2-29 = 1), and Intelligent Stall Prevention during deceleration (L3-04 = 2) to calculate acceleration and deceleration rates.

No.	Name	Setting Range	Default
L3-21	Accel/Decel Rate Calculation Gain	0.10 to 10.00	<1>

<1> This value is reset to its default value when the control mode is changed (A1-02). The value shown here is for OLV.

Adjustment for Single Drive KEB 2 (L2-29 = 1) and Intelligent Stall Prevention during Deceleration

- Reduce L3-21 in steps of 0.05 if there is a fairly large speed or current ripple.
- Small reductions of L3-21 can help solve problems with overvoltage and overcurrent.
- Decreasing this setting too much can cause slow DC bus voltage control response and may also lengthen deceleration times beyond optimal levels.

Adjustment for Overvoltage Suppression

- Increase this setting in steps of 0.1 if overvoltage occurs as a result of a regenerative load when overvoltage suppression is enabled (L3-11 = 1).
- Decrease L3-21 in steps of 0.05 if there is a fairly large speed ripple when overvoltage suppression is enabled.

■ L3-24: Motor Acceleration Time for Inertia Calculations

Sets the time to accelerate the motor from stop to the maximum speed at motor rated torque. Set this parameter when using Single Drive KEB 2 (L2-29 = 1), Intelligent Stall Prevention during Deceleration (L3-04 = 2), or the Overvoltage Suppression function (L3-11 = 1).

No.	Name	Setting Range	Default
L3-24	Motor Acceleration Time for Inertia Calculations	0.001 to 10.000 s	Determined by o2-04, C6-01, E2-11, and E5-01 <1>

<1> Parameter L3-24 is defaulted for a Yaskawa standard 4-pole motor. During Auto-Tuning, L3-24 will be initialized to a Yaskawa standard 4-pole motor if parameter E2-11 is changed. This value also changes based on the motor code set to E5-01 when using OLV/PM.

Automatic Parameter Setup

In CLV/PM, use the Inertia Auto-Tuning function to let the drive automatically adjust this parameter. ***Refer to Auto-Tuning on page 176***.

Manual Parameter Setup

Make the calculations in the formula below:

$$\text{L3-24} = \frac{2 \cdot \pi \cdot J\,[\text{kgm}^2] \cdot n_{rated}[\text{r/min}]}{60 \cdot T_{rated}[\text{Nm}]}$$

Calculate the rated torque in the formula below:

$$T_{rated}[\text{Nm}] = \frac{60 \cdot P_{Motor}[\text{kW}] \cdot 10^3}{2 \cdot \pi \cdot n_{rated}[\text{r/min}]}$$

■ L3-25: Load Inertia Ratio

Determines the ratio between the rotor inertia and the load. Set this parameter when using Single Drive KEB 2 (L2-29 = 1), Intelligent Stall Prevention during deceleration (L3-04 = 2), or the overvoltage suppression function (L3-11 = 1).

No.	Name	Setting Range	Default
L3-25	Load Inertia Ratio	1.0 to 1000.0	1.0

When set incorrectly, a fairly large current ripple can result during Single Drive KEB 2 (L2-29 = 1). This may cause overvoltage suppression (L3-11 = 1) or other faults such as ov, Uv1, and oC.

Automatic Parameter Setup

In CLV for induction motors or PM motors, use the Inertia Auto-Tuning function to let the drive automatically adjust this parameter. ***Refer to Auto-Tuning on page 176***.

Manual Parameter Setup

Calculate parameter L3-25 in the formula below:

$$\text{L3-25} = \frac{\text{Machine Inertia}}{\text{Motor Inertia}}$$

■ L3-26: Additional DC Bus Capacitors

Sets the capacity of any additionally installed DC bus capacitors. This data is used in calculations for Single Drive KEB Ride-Thru 2. Adjust this setting only if external capacity is connected to the DC bus and Single Drive KEB 2 is used.

No.	Name	Setting Range	Default
L3-26	Additional DC Bus Capacitors	0 to 65000 µF	0 µF

■ L3-27: Stall Prevention Detection Time

Sets a delay time from when the Stall Prevention level is reached and the actual Stall Prevention function is activated.

No.	Name	Setting Range	Default
L3-27	Stall Prevention Detection Time	0 to 5000 ms	50 ms

■ L3-34: Torque Limit Delay Time

Sets the filter time constant in seconds for the torque limit value to return to set value when the Power KEB Ride-Thru is enabled (L2-29 = 1). Gradually increase this setting in increments of 0.010 s if oscillation occurs during Power KEB Ride-Thru.

Note: This parameter is not available in models 4A0930 and 4A1200.

No.	Name	Setting Range	Default
L3-34	Torque Limit Delay Time	0.000 to 1.000 s	Determined by A1-02 <1>

<1> L3-34 = 0.200 when A1-02 = 6, L3-34 = 0.020 when A1-02 = 7.

■ L3-35: Speed Agree Width at Intelligent Stall Prevention during Deceleration

Sets the speed agree width when L3-04 = 2 (Intelligent Stall Prevention during Deceleration) in unit of 0.01 Hz. Use this parameter when hunting is started by a frequency reference in analog input. There is normally no need to change this parameter from the default value.

Note: This parameter is not available in models 4A0930 and 4A1200.

No.	Name	Setting Range	Default
L3-35	Speed Agree Width at Intelligent Stall Prevention during Deceleration	0.00 to 1.00 Hz	0.00 Hz

◆ L4: Speed Detection

These parameters set up the speed agree and speed detection functions that can be assigned to the multi-function output terminals.

The speed is detected using the motor speed when A1-02 = 3 or 7.

■ L4-01, L4-02: Speed Agree Detection Level and Detection Width

Parameter L4-01 sets the detection level for the digital output functions Speed agree 1, User-set speed agree 1, Frequency detection 1, and Frequency detection 2.

Parameter L4-02 sets the hysteresis level for these functions.

No.	Name	Setting Range	Default
L4-01	Speed Agree Detection Level	0.0 to 400.0 Hz	0.0 Hz
L4-02	Speed Agree Detection Width	0.0 to 20.0 Hz	Determined by A1-02

Refer to H2-01 to H2-03: Terminal M1-M2, M3-M4, and M5-M6 Function Selection on page 309, Settings 2, 3, 4, and 5.

■ L4-03, L4-04: Speed Agree Detection Level and Detection Width (+/-)

Parameter L4-03 sets the detection level for the digital output functions Speed agree 2, User-set speed agree 2, Frequency detection 3, and Frequency detection 4.

Parameter L4-04 sets the hysteresis level for these functions.

No.	Name	Setting Range	Default
L4-03	Speed Agree Detection Level (+/-)	-400.0 to 400.0 Hz	0.0 Hz
L4-04	Speed Agree Detection Width (+/-)	0.0 to 20.0 Hz	Determined by A1-02

Refer to H2-01 to H2-03: Terminal M1-M2, M3-M4, and M5-M6 Function Selection on page 309, Settings 13, 14, 15, and 16.

■ L4-05: Frequency Reference Loss Detection Selection

The drive can detect a loss of an analog frequency reference from input A1, A2, or A3. Frequency reference loss is detected when the frequency reference drops below 10% of the reference or below 5% of the maximum output frequency within 400 ms. Restoring the analog frequency reference to the L4-06 value or higher before loss occurs will clear the frequency reference loss status.

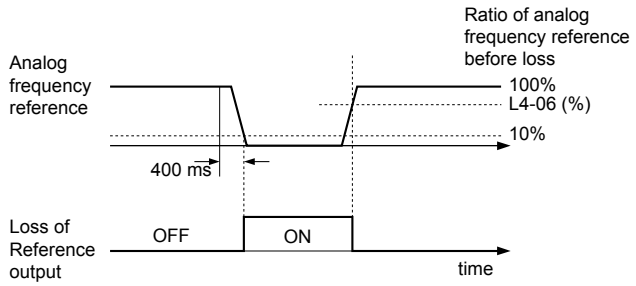

Figure 5.105 Loss of Reference Function

Set H2-01, H2-02, or H2-03 to C for a digital output to trigger when frequency reference loss occurs. *Refer to Setting C: Frequency Reference Loss on page 313* for details on setting the output function.

Parameter L4-05 selects the operation when a frequency reference loss is detected.

No.	Name	Setting Range	Default
L4-05	Frequency Reference Loss Detection Selection	0, 1	0

Setting 0: Operate following the frequency reference

Setting 1: Continue operation with reduced frequency reference

The drive will continue operation at the frequency reference value set to parameter L4-06. When the external frequency reference value is restored, the operation is continued with the frequency reference.

■ L4-06: Frequency Reference at Reference Loss

Sets the frequency reference level at which the drive runs when L4-05 = 1 and when detecting a reference loss. The value is set as a percentage of the frequency reference before the loss was detected.

No.	Name	Setting Range	Default
L4-06	Frequency Reference at Reference Loss	0.0 to 100.0%	80.0%

■ L4-07: Speed Agree Detection Selection

Determines when frequency detection is active using parameters L4-01 through L4-04.

No.	Name	Setting Range	Default
L4-07	Speed Agree Detection Selection	0, 1	0

Setting 0: No Detection during baseblock

Setting 1: Detection always enabled

◆ L5: Fault Restart

After a fault has occurred, Fault Restart attempts to automatically restart the motor and continue operation instead of stopping.

The drive can perform a self-diagnostic check and resume the operation after a fault has occurred. If the self-check is successful and the cause of the fault has disappeared, the drive restarts by first performing Speed Search (***Refer to b3: Speed Search on page 216*** for details).

WARNING! *Sudden Movement Hazard. Do not use the fault restart function in lifting applications. Fault restart may cause the machine to drop the load, which could result in death or serious injury.*

The drive can attempt to restart itself following the faults listed below.

Fault	Name	Fault	Name
GF	Ground Fault	oL4	Overtorque 2
LF	Output Open Phase	ov	DC Bus Overvoltage
oC	Overcurrent	PF	Input Phase Loss
oH1	Drive Overheat	rH	Braking Resistor Fault
oL1	Motor Overload	rr	Braking Transistor Fault
oL2	Drive Overload	Uv1	DC Bus Undervoltage <1>
oL3	Overtorque 1	STo	Pull-Out Detection

<1> When L2-01 is set to 1 through 4 (continue operation during momentary power loss)

Use parameters L5-01 to L5-05 to set up automatic fault restart.

Set H2-01, H2-02, or H2-03 to 1E. to output a signal during fault restart.

■ L5-01: Number of Auto Restart Attempts

Sets the number of times that the drive may attempt to restart itself.

Parameter L5-05 determines the method of incrementing the restart counter. When the counter reaches the number set to L5-01, the operation stops and the fault must be manually cleared and reset.

The restart counter is incremented at each restart attempt, regardless of whether the attempt was successful. When the counter reaches the number set to L5-01, the operation stops and the fault must be manually cleared and reset.

The number of fault restarts is reset to zero when:

- The drive operates normally for 10 minutes following a fault restart.
- A fault is cleared manually after protective functions are triggered.
- The power supply is cycled.

No.	Name	Setting Range	Default
L5-01	Number of Auto Restart Attempts	0 to 10 Times	0 Times

■ L5-02: Auto Restart Fault Output Operation Selection

Determines if a fault output is triggered (H2-□□ = E) when the drive attempts to restart.

No.	Name	Setting Range	Default
L5-02	Auto Restart Fault Output Operation Selection	0, 1	0

Setting 0: No Fault Output

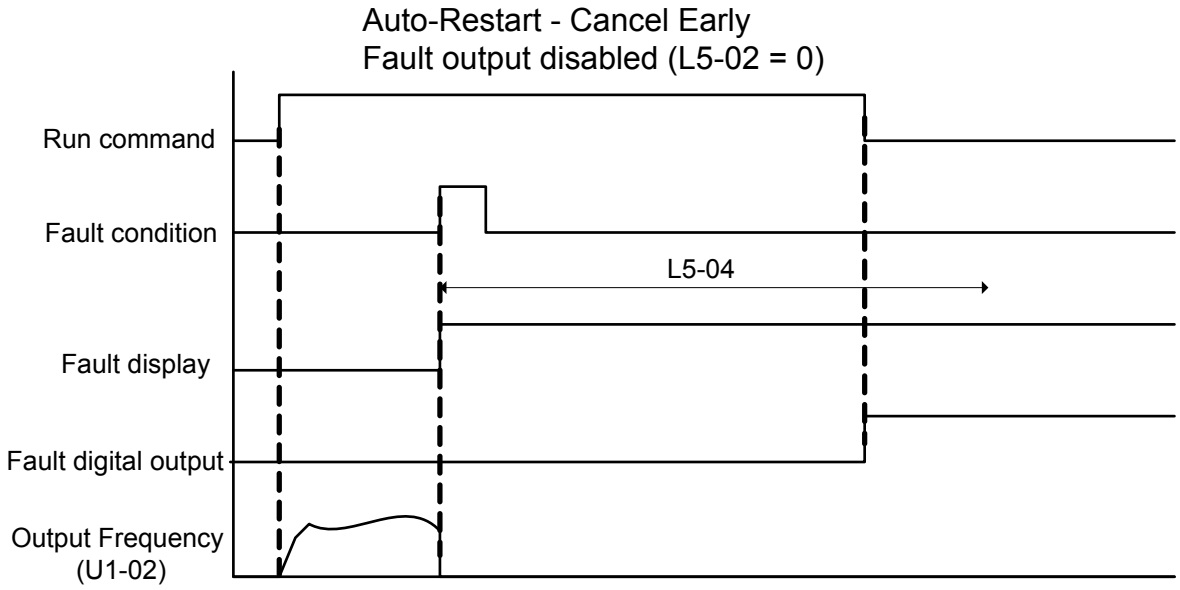

Figure 5.106 Auto Restart Cancel Early

Setting 1: Fault Output Is Set

■ L5-04: Fault Reset Interval Time

Determines the amount of time to wait between restart attempts when parameter L5-05 is set to 1.

No.	Name	Setting Range	Default
L5-04	Fault Reset Interval Time	0.5 to 600.0 s	10.0 s

■ L5-05: Fault Reset Operation Selection

No.	Name	Setting Range	Default
L5-05	Fault Reset Operation Selection	0, 1	0

Setting 0: Count Successful Restarts

The drive will continuously attempt to restart. If it restarts successfully, the restart counter is increased. This operation is repeated each time a fault occurs until the counter reaches the value set to L5-01.

Setting 1: Count Restart Attempts

The drive will attempt to restart using the time interval set to parameter L5-04. A record is kept of the number of attempts to restart to the drive, regardless of whether those attempts were successful. When the number of attempted restarts exceeds the value set to L5-01, the drive stops attempting to restart.

◆ L6: Torque Detection

The drive provides two independent torque detection functions that trigger an alarm or fault signal when the load is too heavy (oL), or suddenly drops (UL). These functions are set up using the L6-□□ parameters. Program the digital outputs as shown below to indicate the underload or overload condition to an external device:

Note: When overtorque occurs in the application, the drive may stop due to overcurrent (oC) or overload (oL1). To prevent the drive from stopping, use torque detection to indicate an overload situation to the controller before oC or oL1 occur. Use undertorque detection to discover application problems like a torn belt, a pump shutting off, or other similar trouble.

H2-01, H2-02, H2-03 Setting	Description
B	Torque detection 1, N.O. (output closes when overload or underload is detected)
17	Torque detection 1, N.C. (output opens when overload or underload is detected)
18	Torque detection 2, N.O. (output closes when overload or underload is detected)
19	Torque detection 2, N.C. (output opens when overload or underload is detected)

Figure 5.107 and *Figure 5.108* illustrate the functions of overtorque and undertorque detection.

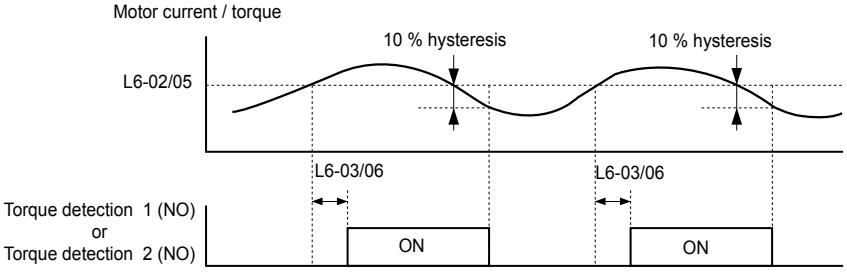

Figure 5.107 Overtorque Detection Operation

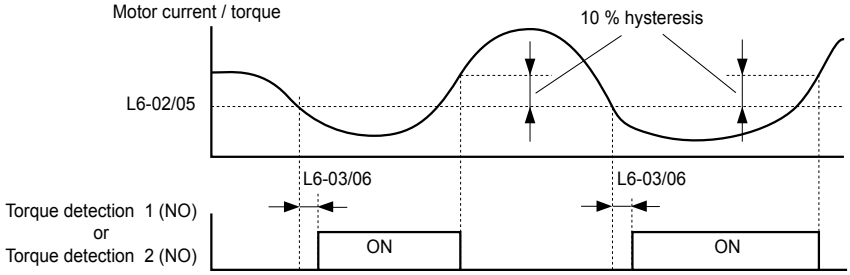

Figure 5.108 Undertorque Detection Operation

Note: 1. The torque detection function uses a hysteresis of 10% of the drive rated output current and motor rated torque.
2. In V/f, V/f w/PG and OLV/PM, the level is set as a percentage of the drive rated output current. In OLV, CLV, AOLV/PM and CLV/PM, the level is set as a percentage of the motor rated torque.

■ L6-01, L6-04: Torque Detection Selection 1, 2

The torque detection function is triggered when the current or torque exceed the levels set to L6-02 and L6-05 for longer than the times set to L6-03 and L6-06. L6-01 and L6-04 select the conditions for detection and the operation that follows.

No.	Name	Setting Range	Default
L6-01	Torque Detection Selection 1	0 to 8	0
L6-04	Torque Detection Selection 2	0 to 8	0

Setting 0: Disabled

Setting 1: oL3, oL4 at Speed Agree (Alarm)

Overtorque detection is active only when the output speed is equal to the frequency reference (i.e., no detection during acceleration and deceleration). The operation continues after detecting overtorque and triggering an oL3/oL4 alarm.

Setting 2: oL3, oL4 at Run (Alarm)

Overtorque detection works as long as the Run command is active. The operation continues after detecting overtorque and triggering an oL3/oL4 alarm.

Setting 3: oL3, oL4 at Speed Agree (Fault)

Overtorque detection is active only when the output speed is equal to the frequency reference, i.e., no detection during acceleration and deceleration. The operation stops and triggers an oL3/oL4 fault.

Setting 4: oL3, oL4 at Run (Fault)

Overtorque detection works as long as a Run command is active. The operation stops and triggers an oL3/oL4 fault.

Setting 5: UL3, UL4 at Speed Agree (Alarm)

Undertorque detection is active only when the output speed is equal to the frequency reference, i.e., no detection during acceleration and deceleration. The operation continues after detecting overtorque and triggering a UL3/UL4 alarm.

Setting 6: UL3, UL4 at Run (Alarm)

Undertorque detection works as long as the Run command is active. The operation continues after detecting overtorque and triggering a UL3/UL4 alarm.

Setting 7: UL3, UL4 at Speed Agree (Fault)

Undertorque detection is active only when the output speed is equal to the frequency reference, i.e., no detection during acceleration and deceleration. The operation stops and triggers a UL3/UL4 fault.

Setting 8: UL3, UL4 at Run (Fault)

Undertorque detection works as long as a Run command is active. The operation stops and triggers a UL3/UL4 fault.

■ L6-02, L6-05: Torque Detection Level 1, 2

These parameters set the detection levels for torque detection functions 1 and 2. In V/f and OLV/PM control modes, these levels are set as a percentage of the drive rated output current. In vector control modes, these levels are set as a percentage of the motor rated torque.

When Mechanical Weakening detection is enabled (L6-08 ≠ 0), the level for L6-02 is set as a percentage of the drive rated output current in all control modes.

No.	Name	Setting Range	Default
L6-02	Torque Detection Level 1	0 to 300%	150%
L6-05	Torque Detection Level 2	0 to 300%	150%

Note: The torque detection level 1 (L6-02) can also be supplied by an analog input terminal set to H3-□□ = 7. Here, the analog value has priority and the setting in L6-02 is disregarded. Torque detection level 2 (L6-05) cannot be set by an analog input.

■ L6-03, L6-06: Torque Detection Time 1, 2

These parameters determine the time required to trigger an alarm or fault after exceeding the levels in L6-02 and L6-05.

No.	Name	Setting Range	Default
L6-03	Torque Detection Time 1	0.0 to 10.0 s	10.0 s
L6-06	Torque Detection Time 2	0.0 to 10.0 s	0.1 s

■ Mechanical Weakening Detection

This function detects the mechanical weakening of a machine that leads to overtorque or undertorque situations after a set machine operation time has elapsed.

The function is activated in the drive when the cumulative operation counter U4-01 exceeds the time set to parameter L6-11. Mechanical Weakening Detection uses the torque detection 1 settings (L6-01, L6-02, L6-03) and triggers an oL5 or UL5 fault when overtorque or undertorque occurs in the speed range determined by parameter L6-08 and L6-09. The oL5 or UL5 operation is set by parameter L6-08.

Set H2-□□ to 22 to output a signal for Mechanical Weakening Detection.

■ L6-08: Mechanical Weakening Detection Operation

Sets the speed range to detect mechanical weakening and the action to take when mechanical weakening is detected.

No.	Name	Setting Range	Default
L6-08	Mechanical Weakening Detection Operation	0 to 8	0

Setting 0: Disabled

Setting 1: Continue Running if the Speed Is Greater than L6-09 (Signed) (Alarm)

Detection when the speed is above L6-09 (signed). Operation continues and triggers an oL5 alarm after detection.

Setting 2: Continue Running if the Speed Is Greater than L6-09 (Alarm)

Detection when the speed is above L6-09 (unsigned). Operation continues and triggers an oL5 alarm after detection.

Setting 3: Stop when Motor Speed Is Greater than L6-09 (Signed)

Detection when the speed is above L6-09 (signed). Operation stops and triggers an oL5 fault after detection.

Setting 4: Stop when Motor Speed Is Greater than L6-09

Detection when the speed is above L6-09 (unsigned). Operation stops and triggers an oL5 fault after detection.

Setting 5: Continue Running if the Speed Is Less than L6-09 (Signed) (Alarm)

Detection when the speed is below L6-09 (signed). Operation continues and triggers a UL5 alarm after detection.

Setting 6: Continue Running if the Speed Is Less than L6-09 (Alarm)

Detection when the speed is below L6-09 (unsigned). Operation continues and triggers a UL5 alarm after detection.

Setting 7: Stop when Motor Speed Is Less than L6-09 (Signed)

Detection when the speed is below L6-09 (signed). Operation stops and triggers a UL5 fault after detection.

Setting 8: Stop when Motor Speed Is Less than L6-09

Detection when the speed is below L6-09 (unsigned). Operation stops and triggers a UL5 fault after detection.

■ L6-09: Mechanical Weakening Detection Speed Level

Sets the speed level for Mechanical Weakening Detection as a percentage of the maximum frequency. If L6-08 is set for unsigned speed detection (L6-08 = 2, 4, 6, 8), the absolute value of L6-09 is used (negative settings are treated as positive values).

No.	Name	Setting Range	Default
L6-09	Mechanical Weakening Detection Speed Level	-110.0 to 110.0%	110%

■ L6-10: Mechanical Weakening Detection Time

Sets the time permitted for the situation selected in parameter L6-08 to arise before detecting mechanical weakening.

No.	Name	Setting Range	Default
L6-10	Mechanical Weakening Detection Time	0.0 to 10.0 s	0.1 s

■ L6-11: Mechanical Weakening Detection Start Time

Sets the cumulative drive operation time at which Mechanical Weakening Detection is activated. The function activates when U4-01 reaches the L6-11 value.

No.	Name	Setting Range	Default
L6-11	Mechanical Weakening Detection Start Time	0 to 65535 h	0 h

◆ L7: Torque Limit

The torque limit function limits the torque in each of the four quadrants individually to protect machinery in OLV, CLV, AOLV/PM, and CLV/PM control modes. Set the limit through parameters, analog inputs, or by switching a digital output programmed for “During torque limit” (H2-01, H2-02, H2-03 = 30) when the drive is operating at the torque limit.

■ Setting Torque Limits

Parameters L7-01 to L7-04 define the torque limits for each of the four operation quadrants. it is also possible to use Analog inputs to define a general limit for all operation conditions (H3-02, H3-06, H3-10 = 15) or to set separate limits for each operation condition (H3-02, H3-06, H3-10 = 10, 11, or 12). *Figure 5.109* shows limit setting is applied in each quadrant.

If two limit values are defined for the same operation conditions, the drive will use the lower value.

Note: The maximum output torque is ultimately limited by the drive output current (max. 150% of drive rated current in HD, 120% in ND). Output torque will not exceed the drive rated current limit even if the torque limits are set to higher values.

Example: If parameter L7-01 = 130%, L7-02 to L7-04 = 200%, and an analog input sets a general torque limit of 150% (H3-02, H3-06, H3-10 = 15), then the torque limit will be 130% in quadrant 1, but 150% in the other quadrants.

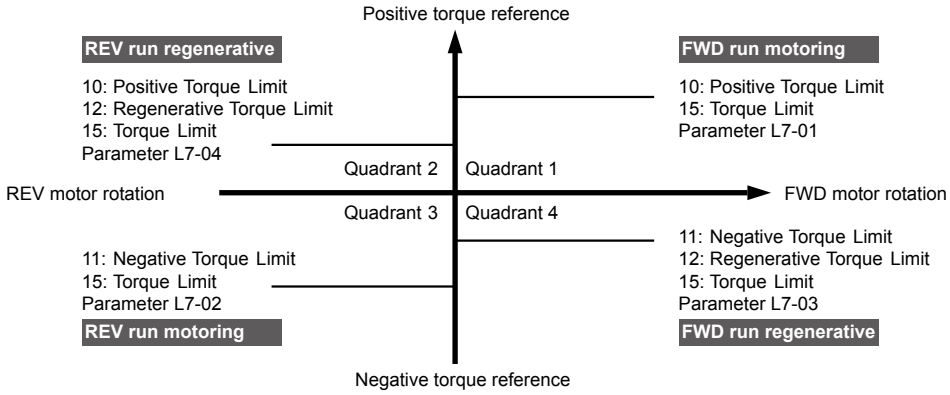

Figure 5.109 Torque Limit Parameters and Analog Input Settings

■ L7-01 to L7-04: Torque Limits

These parameters set the torque limits in each quadrant.

No.	Name	Setting Range	Default
L7-01	Forward Torque Limit	0 to 300%	200%
L7-02	Reverse Torque Limit	0 to 300%	200%
L7-03	Forward Regenerative Torque Limit	0 to 300%	200%
L7-04	Reverse Regenerative Torque Limit	0 to 300%	200%

Note: If the multi-function analog input is programmed for “10: Forward torque limit”, “11: Reverse torque limit”, “12: Regenerative torque limit”, or “15: General torque limit”, the drive uses the lowest value from L7-01 through L7-04, or analog input torque limit.

■ L7-06: Torque Limit Integral Time Constant

Sets the integral time constant for the torque limit function. Decrease the setting for faster torque limit response. Increase the setting if oscillation occurs when operating at the torque limit.

No.	Name	Setting Range	Default
L7-06	Torque Limit Integral Time Constant	5 to 10000 ms	200 ms

■ L7-07: Torque Limit Control Method Selection during Accel/Decel

Selects the function of torque limit during acceleration and deceleration.

No.	Name	Setting Range	Default
L7-07	Torque Limit Control Method Selection during Accel/Decel	0, 1	0

Setting 0: Proportional Control

The torque limit function works with P control during accel and decel, and switches to I control at constant speed. Use this setting when accelerating or decelerating to the desired speed has priority over the torque limit during speed changes.

Setting 1: Integral Control

The torque limit function always uses I control. Use this setting when a highly accurate torque limit is required, even during speed changes. Using this function may increase the acceleration time, or prevent the motor speed from reaching the frequency reference if the torque limit is reached first.

■ L7-16: Torque Limit Process at Start

Assigns a time filter to allow the torque limit to build at start.

No.	Name	Setting Range	Default
L7-16	Torque Limit Process at Start	0, 1	1

Setting 0: Disabled

Torque limit is created at start without a delay time. Disable L7-16 to maximize the response time when the application requires sudden acceleration or deceleration at start.

Setting 1: Enabled

A delay time of 64 ms is added to allow the torque limit to build at start.

◆ L8: Drive Protection

■ L8-01: Internal Dynamic Braking Resistor Protection Selection (ERF type)

Selects the dynamic braking resistor protection when using an optional heatsink mounted braking resistor (ERF type, 3% ED).

Note: This parameter is not available in models 4A0930 and 4A1200.

No.	Name	Setting Range	Default
L8-01	Internal Dynamic Braking Resistor Protection Selection (ERF type)	0, 1	Determined by C6-01 and o2-04

Setting 0: Disabled

Disables braking resistor protection. Use this setting for any dynamic braking option other than the Yaskawa ERF-type resistor.

Setting 1: Enabled

Enables protection for Yaskawa ERF-type resistors.

■ L8-02: Overheat Alarm Level

Sets the overheat alarm (oH) detection level.

The drive outputs an alarm when the heatsink temperature exceeds the overheat alarm level. If the temperature reaches the overheat fault level, the drive will trigger an oH1 fault and stop operation.

When an output terminal is set for the oH pre-alarm (H2-□□ = 20), the switch will close when the heatsink temperature rises above L8-02.

No.	Name	Setting Range	Default
L8-02	Overheat Alarm Level	50 to 150 °C	Determined by C6-01 and o2-04

■ L8-03: Overheat Pre-Alarm Operation Selection

Sets the operation when an overheat pre-alarm is detected.

Note: Change L8-03 setting only when necessary.

No.	Name	Setting Range	Default
L8-03	Overheat Pre-Alarm Operation Selection	0 to 4	3

Setting 0: Ramp to Stop

If an overheat alarm occurs, the drive decelerates to stop using the currently selected deceleration time. If a digital output is programmed for “fault” (H2-□□ = E), this output will be triggered.

Setting 1: Coast to Stop

If an overheat alarm occurs, the drive switches off the output and the motor coasts to stop. If a digital output is programmed for “fault” (H2-□□ = E), this output will be triggered.

Setting 2: Fast Stop

If an overheat alarm occurs, the drive decelerates to stop using the Fast Stop time (C1-09). If a digital output is programmed for “fault” (H2-□□ = E), this output will be triggered.

Setting 3: Alarm Only

If an overheat alarm occurs, an alarm is output and the drive continues operation.

Setting 4: Operation with Reduced Speed

If an overheat alarm occurs, the operation continues with the speed reduced to the level set to parameter L8-19. If the oH alarm is still present after 10 s, the speed is reduced again. The amount of speed reduction depends on how often the alarm repeats. If the oH alarm disappears while the drive is operating at a reduced speed, the drive will switch to the previous speed in 10 s increments until reaching base frequency. *Figure 5.110* explains the operation with reduced speed during an oH alarm. A digital output programmed for 4D is switched when the oH alarm is still active after ten reduction cycles.

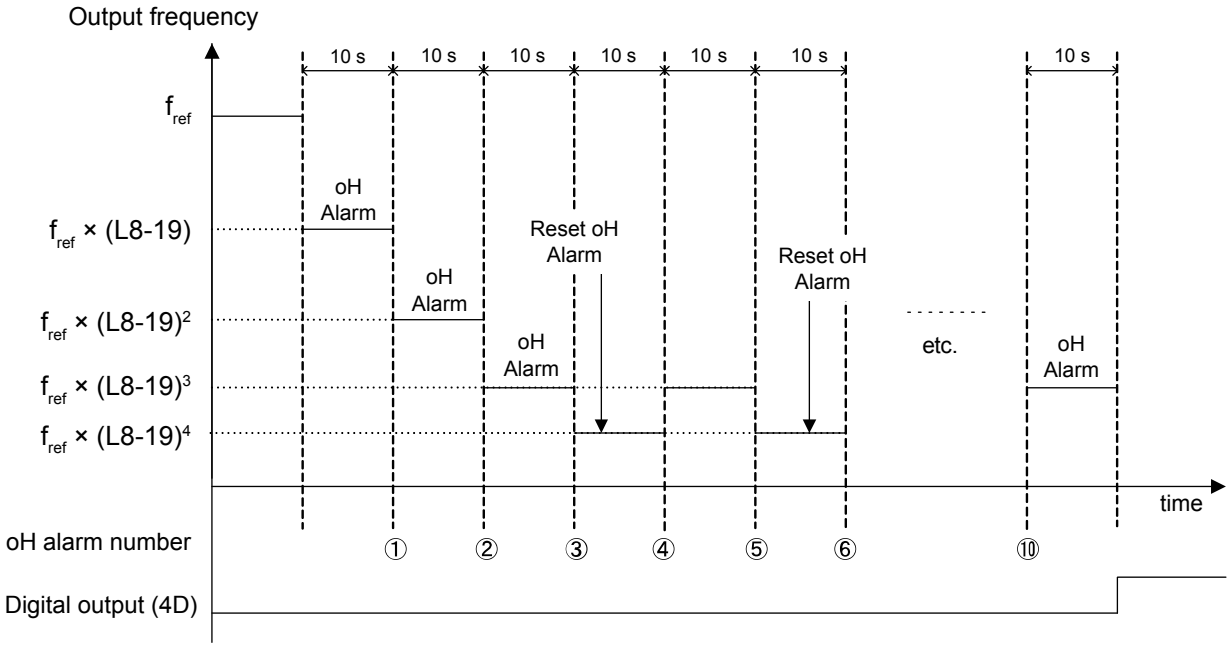

Figure 5.110 Output Frequency Reduction During Overheat Alarm

■ L8-05: Input Phase Loss Protection Selection

Enables or disables the input phase loss detection.

No.	Name	Setting Range	Default
L8-05	Input Phase Loss Protection Selection	0, 1	1

Setting 0: Disabled

Setting 1: Enabled

Enables input phase loss detection. Since measuring the DC bus ripple detects input phase loss, a power supply voltage imbalance or main circuit capacitor deterioration may also trigger a phase loss fault (PF).

Detection is disabled if:

- The drive is decelerating.
- No Run command is active.
- Output current is less than or equal to 30% of the drive rated current.

■ L8-07: Output Phase Loss Protection Selection

Enables or disables the output phase loss detection.

Note:
1. Output phase loss detection can mistakenly be triggered if the motor rated current is very small compared to the drive rating. Disable this parameter in such cases.
2. Output phase loss detection is not possible when the drive is running a PM motor with light load.

No.	Name	Setting Range	Default
L8-07	Output Phase Loss Protection Selection	0 to 2	1

Setting 0: Disabled

Setting 1: Fault when One Phase Is Lost

An output phase loss fault (LF) is triggered when the output current for any phase U, V, or W drops to 5% or less of the drive rated current.

When using a PM motor, this is applicable when the output current is 30% or higher of the drive rated current.

When using an IM motor, this is applicable when the output current is 5% or higher of the drive rated current.

Setting 2: Fault when Two Phases Are Lost

An output phase loss fault (LF) is triggered when the output current for phases U, V, and W all drop to 5% or less of the drive rated current.

The output shuts off and the motor coasts to stop.

■ L8-09: Output Ground Fault Detection Selection

Enables or disables the output ground fault detection.

No.	Name	Setting Range	Default
L8-09	Output Ground Fault Detection Selection	0, 1	1

Setting 0: Disabled

Ground faults are not detected.

Setting 1: Enabled

A ground fault (GF) is triggered when high leakage current or a ground short circuit occurs in one or two output phases.

■ L8-10: Heatsink Cooling Fan Operation Selection

Selects the heatsink cooling fan operation.

No.	Name	Setting Range	Default
L8-10	Heatsink Cooling Fan Operation Selection	0, 1	0

Setting 0: Run with Timer

The fan is switched on when a Run command is active and switched off with the delay set to parameter L8-11 after releasing the Run command. This setting extends the fan lifetime.

Setting 1: Run Always

The fan runs when power is supplied to the drive.

■ L8-11: Heatsink Cooling Fan Off-Delay Time

Sets the cooling fan switch off-delay time if parameter L8-10 is set to 0.

No.	Name	Setting Range	Default
L8-11	Heatsink Cooling Fan Off-Delay Time	0 to 300 s	60 s

■ L8-12: Ambient Temperature Setting

Automatically adapts the drive rated current to safe values when used with parameter L8-35. This eliminates the need to reduce the drive rated current when the temperature where the drive is mounted is above the specified values. ***Refer to Temperature Derating on page 553*** for details.

No.	Name	Setting Range	Default
L8-12	Ambient Temperature Setting	-10 to +50 °C	40 °C

■ L8-15: oL2 Characteristics Selection at Low Speeds

Selects whether the drive overload capability (oL fault detection level) is reduced at low speeds to prevent premature output transistor failures. Set this parameter to 0 (Protection disabled at low speed) when protection is activated for an oL2 fault for a light load at low speed.

Note:
1. Contact Yaskawa or a Yaskawa representative before using the drive for applications for which the setting is 0 (disabled).
2. Do not set this parameter to 0 (disabled) in V/f or OLV control.
3. Do not set this parameter to 0 (disabled) in models 4□0302 to 4□0930.

No.	Name	Setting Range	Default
L8-15	oL2 Characteristics Selection at Low Speed	0, 1	1

Setting 0: oL2 (Drive Overload) Characteristics Disabled at Low Speed

The overload protection level is not reduced. Frequently operating the drive with high output current at low speed can lead to premature drive faults.

Setting 1: oL2 (Drive Overload) Characteristics Enabled at Low Speed

The overload protection level (oL2 fault detection level) is automatically reduced at speeds below 6 Hz. At zero speed, the overload is derated by 50%.

■ L8-18: Software Current Limit Selection

Enables and disables the Software Current Limit (CLA) protection function to prevent main circuit transistor failures caused by high current.

Note: This setting should not be changed unless absolutely necessary.

No.	Name	Setting Range	Default
L8-18	Software Current Limit Selection	0, 1	0

Setting 0: Software CLA Disabled

The drive may trip on an oC fault if the load is too heavy or the acceleration is too short.

Setting 1: Software CLA Enabled

When the Software CLA current level is reached, the drive reduces the output voltage to reduce the current. Normal operation continues when the current level drops below the Software CLA level.

■ L8-19: Frequency Reduction Rate during Overheat Pre-Alarm

Specifies the output frequency reduction when L8-03 is set to 4 and an oH alarm is present.

No.	Name	Setting Range	Default
L8-19	Frequency Reduction Rate During Overheat Pre-Alarm	0.1 to 0.9	0.8

■ L8-27: Overcurrent Detection Gain

Adjusts the overcurrent detection level in OLV/PM, AOLV/PM, or CLV/PM. A setting of 100% is equal to the motor rated current. When the drive rated current is considerably higher than the motor rated current, use this parameter to decrease the overcurrent level and prevent motor demagnetization from high current.

Overcurrent detection uses the lower value between the overcurrent level for the drive and the motor rated current multiplied by L8-27.

No.	Name	Setting Range	Default
L8-27	Overcurrent Detection Gain	0.0 to 400.0%	300.0%

■ L8-29: Current Unbalance Detection (LF2)

Enables and disables output current unbalance detection in OLV/PM, AOLV/PM, or CLV/PM. Current unbalance can heat a PM motor and demagnetize the magnets. The current unbalance detection function monitors output current and triggers the LF2 fault to prevent such motor damage.

No.	Name	Setting Range	Default
L8-29	Current Unbalance Detection (LF2)	0 to 3 <1>	1

<1> Settings 2 and 3 are not available in models 4A0930 or 4A1200.

2A0004 to 2A0415, 4A0002 to 4A0630, 5A0003 to 5A0242
Setting 0: Disabled

No current unbalance protection is provided to the motor.

Setting 1: Enabled (Current and Voltage Detection)

Setting 2: Enabled (Current Detection)

The LF2 fault is triggered if an output current imbalance is detected. Drive output shuts off and the motor coasts to stop.

Setting 3: Enabled (Voltage Detection)

4A0930, 4A1200
Setting 0: Disabled

Setting 1: Enabled (Current Detection)

■ L8-32: Cooling Fan Failure Selection

Determines drive operation when a FAn fault occurs.

No.	Name	Setting Range	Default
L8-32	Cooling Fan Failure Selection	0 to 4	1

Setting 0: Ramp to Stop

The drive stops the motor using the deceleration time set in parameter C1-02.

Setting 1: Coast to Stop

The drive output is switched off and the motor coasts to a stop.

Setting 2: Fast Stop

The drive stops the motor using the Fast stop time set in parameter C1-09.

Setting 3: Alarm Only

The operation is continued and a FAn alarm is displayed on the digital operator.

Setting 4: Operation with Reduced Speed

The operation is continued, but the speed is reduced to the level set in parameter L8-19.

Note: "FAn" is detected as an error when Settings 0 or 2 are selected; it is detected as an alarm when Settings 3 or 4 are selected.

■ L8-35: Installation Method Selection

Selects the type of installation for the drive and changes the drive overload (oL2) limits accordingly. ***Refer to Temperature Derating on page 553*** for details.

Note:
1. Initialization does not reset this parameter.
2. The value is preset to the appropriate value when the drive is shipped. Change the value only when using Side-by-Side installation or when mounting a standard drive with the heatsink outside the cabinet.

No.	Name	Setting Range	Default
L8-35	Installation Method Selection	0 to 3	<1>

<1> Default setting is determined by drive model.
Setting 2: Model code 2A0004 to 2A0211, 4A0002 to 4A0165, and 5A0003 to 5A0242
Setting 0: Model code 2A0250 to 2A0415 and 4A0208 to 4A1200.

Setting 0: IP00/Open-Chassis Enclosure

For an Open Type enclosure drive installed with at a minimum of 30 mm space to the next drive or a cabinet wall.

Setting 1: Side-by-Side Mounting

For drives mounted according to Yaskawa Side-by-Side specifications (requires 2 mm between drives).

Setting 2: IP20/NEMA 1, UL Type 1 Enclosure

For drives compliant with IP20/NEMA 1, UL Type 1 enclosure specifications.

Setting 3: External Heatsink Installation

For a standard drive mounted with the heatsink outside the cabinet or enclosure panel.

■ L8-38: Carrier Frequency Reduction Selection

Selects the operation of the carrier frequency reduction function. Reduces the carrier frequency when the output current exceeds a certain level. This temporarily increases the overload capability (oL2 detection), allowing the drive to run through transient load peaks without tripping.

Note: This function cannot be used in AOLV/PM.

No.	Name	Setting Range	Default
L8-38	Carrier Frequency Reduction Selection	0 to 2	Determined by A1-02, C6-01 and o2-04

Setting 0: Disabled

No carrier frequency reduction at high current.

Setting 1: Enabled for Output Frequencies below 6 Hz

The carrier frequency is reduced at speeds below 6 Hz when the current exceeds 100% of the drive rated current. The drive returns to the normal carrier frequency when the current falls below 88% or the output frequency exceeds 7 Hz.

Setting 2: Enabled for Entire Frequency Range

The carrier frequency is reduced at the following speeds:

- Below 6 Hz when the current exceeds 100% of the drive rated current.

- Above 7 Hz when the current exceeds 112% of the drive rated current.

The drive uses the delay time set in parameter L8-40 and a hysteresis of 12% when switching the carrier frequency back to the set value.

■ L8-40: Carrier Frequency Reduction Off-Delay Time

The following settings are used when the carrier frequency is to be reduced at start:

- Time taken for the reduced carrier frequency to return to the carrier frequency set at C6-02.
- Time taken to return to the set carrier frequency after reducing it by setting L8-38 to 1 or 2.

The carrier frequency reduction function at start is disabled if this value is 0.00 s.

No.	Name	Setting Range	Default
L8-40	Carrier Frequency Reduction Off-Delay Time	0.00 to 2.00 s	Determined by A1-02

■ L8-41: High Current Alarm Selection

Triggers a high current alarm (HCA) when the output current exceeds 150% of the drive rated current.

No.	Name	Setting Range	Default
L8-41	High Current Alarm Selection	0, 1	0

Setting 0: Disabled

No alarm is detected.

Setting 1: Enabled

An alarm is triggered when the output current exceeds 150% of the drive rated current. A digital output set for an alarm (H2-□□ = 10) will close.

■ L8-55: Internal Braking Transistor Protection

Enables or disables protection for the internal braking transistor.

Note: This parameter is not available in models 4A0930 and 4A1200.

No.	Name	Setting Range	Default
L8-55	Internal Braking Transistor Protection	0, 1	1

Setting 0: Disabled

Disable braking transistor protection when not using the internal braking transistor, including the following instances:

- When using a regen converter such as DC.
- When using a regen unit such as RC5.
- When using external braking transistor options like CDBR units.
- When using the drive in common DC bus applications and the internal braking unit is not installed.

Enabling L8-55 under such conditions can incorrectly trigger a braking resistor fault (rF).

Setting 1: Enabled

Enable L8-55 when connecting a braking resistor or a braking resistor unit to the drive built-in braking transistor.

Models 2A0004 to 2A0138, 4A0002 to 4A0072, and 5A0003 to 5A0052 come with a built-in braking transistor.

■ L8-78: Power Unit Output Phase Loss Protection

Protects the power unit from phase loss.

Note: This parameter is only available in models 4A0930 and 4A1200.

No.	Name	Setting Range	Default
L8-78	Power Unit Output Phase Loss Protection	0, 1	1

Setting 0: Disabled

Setting 1: Enabled

■ L8-93: LSo Detection Time at Low Speed

Sets the amount of time until baseblock is executed after LSo has been detected at low speed.

A setting of 0.0 s disables this parameter.

No.	Name	Setting Range	Default
L8-93	LSo Detection Time at Low Speed	0.0 to 10.0 s	1.0 s

■ L8-94: LSo Detection Level at Low Speed

Determines the detection level of STo at low speed. Set as a percentage of the maximum frequency (E1-04).

No.	Name	Setting Range	Default
L8-94	LSo Detection Level at Low Speed	0 to 10%	3%

■ L8-95: Average LSo Frequency at Low Speed

Sets the average number of times LSo can occur at low speed.

No.	Name	Setting Range	Default
L8-95	Average LSo Frequency at Low Speed	1 to 50 times	10 times

◆ L9: Drive Protection 2

■ L9-03: Carrier Frequency Reduction Level Selection

Selects start or clear current level for automatic carrier frequency reduction. There is normally no need to change this parameter from the default value.

Note: This parameter is not available in models 4A0930 and 4A1200.

No.	Name	Setting Range	Default
L9-03	Carrier Frequency Reduction Level Selection	0, 1	0

Setting 0: Reduces the Carrier Frequency Based on the Drive Rated Current that Is Not Derated

Setting 1: Reduces the Carrier Frequency Based on the Drive Rated Current that Is Derated by the Carrier Frequency and Temperature with C6-02 Selection

5.9 n: Special Adjustments

These parameters control a variety of specialized adjustments and functions, including Hunting Prevention, AFR Control, High Slip Braking, resistance between motor lines, and PM motor control functions.

◆ n1: Hunting Prevention

Hunting Prevention prevents the drive from hunting as a result of low inertia and operating with light load. Hunting often occurs with a high carrier frequency and an output frequency below 30 Hz.

■ n1-01: Hunting Prevention Selection

Enables or disables the Hunting Prevention function.

Note: This function is available only when using V/f Control. Disable Hunting Prevention when drive response is more important than suppressing motor oscillation. This function may be disabled without problems in applications with high inertia loads or relatively heavy loads.

No.	Name	Setting Range	Default
n1-01	Hunting Prevention Selection	0, 1	1

Setting 0: Disabled

Setting 1: Enabled

■ n1-02: Hunting Prevention Gain Setting

Sets the gain for the Hunting Prevention Function.

No.	Name	Setting Range	Default
n1-02	Hunting Prevention Gain Setting	0.00 to 2.50	1.00

Although this parameter rarely needs to be changed, it may require adjustment in the following situations:
- If the motor vibrates while lightly loaded and n1-01 = 1, increase the gain by 0.1 until vibration ceases.
- If the motor stalls while n1-01 = 1, decrease the gain by 0.1 until the stalling ceases.

■ n1-03: Hunting Prevention Time Constant

Determines the responsiveness of the Hunting Prevention function (affects the primary delay time for Hunting Prevention).

No.	Name	Setting Range	Default
n1-03	Hunting Prevention Time Constant	0 to 500 ms	Determined by o2-04

Although this parameter rarely needs to be changed, it may require adjustment in the following situations:
- Increase this value for applications with a large load inertia. A higher setting leads to slower response, which can result in oscillation at lower frequencies.
- Lower this setting if oscillation occurs at low speed.

■ n1-05: Hunting Prevention Gain while in Reverse

This parameter functions the same as n1-02, except it is used when rotating in reverse. See the explanation for n1-02.

Note: n1-02 is enabled for forward and reverse operation when n1-05 = 0.0 ms.

No.	Name	Setting Range	Default
n1-05	Hunting Prevention Gain while in Reverse	0.00 to 2.50	0.00

◆ n2: Speed Feedback Detection Control (AFR) Tuning

These parameters help achieve speed stability when a load is suddenly applied or removed.

Note: Properly set all motor parameters or perform Auto-Tuning before making changes to the AFR parameters.

■ n2-01: AFR Gain

Sets the internal speed feedback detection control gain in the AFR.

No.	Name	Setting Range	Default
n2-01	AFR Gain	0.00 to 10.00	1.00

Although this parameter rarely needs to be changed, it may require adjustment in the following situations:
- If hunting occurs, increase the setting value in steps of 0.05 while checking the response.
- If response is low, decrease the setting value in steps of 0.05 while checking the response.

■ n2-02, n2-03: AFR Time Constant 1, 2

Parameter n2-02 sets the time constant normally used by AFR.

Parameter n2-03 sets the time constant during Speed Search or regenerative operation.

No.	Name	Setting Range	Default
n2-02	AFR Time Constant 1	0 to 2000 ms	50 ms
n2-03	AFR Time Constant 2	0 to 2000 ms	750 ms

Note: Setting parameter n2-02 higher than n2-03 will trigger an oPE08 error.

Although these parameters rarely need to be changed, they may require adjustment in the following situations:
- If hunting occurs, increase n2-02. If response is low, decrease it.
- Increase n2-03 if overvoltage occurs with high inertia loads at the end of acceleration or with sudden load changes.
- If setting n2-02 to a higher value, increase C4-02 (Torque Compensation Delay Time Constant 1) proportionally.
- If setting n2-03 to a higher value, increase C4-06 (Torque Compensation Delay Time Constant 2) proportionally.

◆ n3: High Slip Braking (HSB) and Overexcitation Braking

■ High Slip Braking (V/f)

HSB works in V/f Control only and decreases the stopping time compared to normal deceleration without using dynamic braking options. HSB reduces the output frequency in large steps to stop the motor and produce a high slip, which dissipates the regenerative energy created from decelerating the load in the motor windings. Due to the increased temperature of the motor windings, do not use HSB to frequently stop the motor. The duty cycle should be around 5% or lower.

Notes on Using High Slip Braking

- The set deceleration time is ignored during HSB. Use Overexcitation Deceleration 1 (L3-04 = 4) to stop the motor within a specified time.
- Braking time varies based on the load inertia and motor characteristics.
- Enabling HSB and KEB Ride-Thru simultaneously will trigger an oPE03 error.
- HSB must be triggered by a digital input set to H1-□□ = 68. After the HSB command is given, the drive will not restart until the motor is completely stopped and the Run command is cycled.
- Use parameters n3-01 through n3-04 to adjust HSB.

■ n3-01: High Slip Braking Deceleration Frequency Width

Sets the step width for frequency reduction during HSB. Increase n3-01 if DC bus overvoltage (ov) occurs during HSB.

No.	Name	Setting Range	Default
n3-01	High Slip Braking Deceleration Frequency Width	1 to 20%	5%

■ n3-02: High Slip Braking Current Limit

Sets the maximum current to be output during an HSB stop as a percentage of motor rated current (E2-01). Reducing the current limit increases the deceleration time. This value must not exceed the drive overload capacity.

- Lower this setting if overvoltage occurs during HSB.
- Lower this setting if motor current is too high during HSB. High current can damage the motor due to overheat.
- The default setting is 150% when the drive is set for Heavy Duty, and 120% when the drive is set for Normal Duty.

No.	Name	Setting Range	Default
n3-02	High Slip Braking Current Limit	100 to 200%	Determined by C6-01 and L8-38

■ n3-03: High Slip Braking Dwell Time at Stop

When the motor reaches a relatively low speed at the end of HSB, the output frequency is kept at the minimum output frequency set to E1-09 for the time set to n3-03. Increase this time if the inertia is very high and the motor coasts after HSB is complete.

No.	Name	Setting Range	Default
n3-03	High Slip Braking Dwell Time at Stop	0.0 to 10.0 s	1.0 s

■ n3-04: High Slip Braking Overload Time

Sets the time required for an HSB overload fault (oL7) to occur when the drive output frequency does not change during an HSB stop due to excessive load inertia or the load rotating the motor. To protect the motor from overheat, the drive trips with an oL7 fault if these conditions last longer than the time set in n3-04.

No.	Name	Setting Range	Default
n3-04	High Slip Braking Overload Time	30 to 1200 s	40 s

■ Overexcitation Deceleration (Induction Motors)

Increases the flux during deceleration and allows shorter deceleration time settings without the use of a braking resistor. Enabled by setting L3-04 to 4 or 5. ***Refer to L3-04: Stall Prevention Selection during Deceleration on page 348***.

Notes on Overexcitation Deceleration

- Frequently applying Overexcitation Deceleration raises the motor temperature because regenerative energy is mainly dissipated as heat in the motor. In cases where frequent application is required, make sure the motor temperature does not exceed the maximum allowable value or consider using a braking resistor option in lieu of Overexcitation Deceleration.
- During Overexcitation Deceleration 2, Hunting Prevention in V/f Control and torque limits in OLV Control are disabled.
- Do not use Overexcitation Deceleration in combination with a braking resistor option.
- Overexcitation Deceleration can be used in OLV and CLV, but it lowers the accuracy of Torque Control and braking efficiency. It can be most efficiently used in a V/f Control.
- Overexcitation Deceleration cannot be used with PM motors.

Parameter Adjustments

- Use parameters n3-13 through n3-23 to adjust Overexcitation Deceleration.
- When repetitive or long Overexcitation Deceleration causes motor overheat, lower the overexcitation gain (n3-13) and reduce the overslip suppression current level (n3-21).
- During Overexcitation Deceleration 1 (L3-04 = 4), the drive decelerates at the active deceleration time (C1-02, C1-04, C1-06, or C1-08). Set this time so no overvoltage (ov) fault occurs.
- During Overexcitation Deceleration 2 (L3-04 = 5), the drive decelerates using the active deceleration time while adjusting the deceleration rate to keep the DC bus voltage at the level set to L3-17. The actual stopping time will be longer or shorter than the set deceleration time depending on the motor characteristics and the load inertia. Increase the deceleration time if overvoltage occurs (ov).
- Entering a Run command during Overexcitation Deceleration cancels overexcitation operation and the drive reaccelerates to the specified speed.

■ n3-13: Overexcitation Deceleration Gain

Multiplies a gain to the V/f pattern output value during Overexcitation Deceleration to determine the level of overexcitation. The drive returns to the normal V/f value after the motor has stopped or when it is accelerating to the frequency reference.

No.	Name	Setting Range	Default
n3-13	Overexcitation Deceleration Gain	1.00 to 1.40	1.10

The optimum setting for n3-13 depends on the motor flux saturation characteristics.

- Gradually increase the gain to 1.25 or 1.30 to improve the braking power of Overexcitation Deceleration.
- Lower n3-13 when flux saturation characteristics cause overcurrent. A high setting sometimes causes overcurrent (oC), motor overload (oL1), or drive overload (oL2). Lowering n3-21 can also help remedy these problems.

■ n3-14: High Frequency Injection during Overexcitation Deceleration

Enables High Frequency Injection while Overexcitation Deceleration is executed. Injecting high frequency into the motor increases loss and shortens deceleration time. This function tends to increase audible noise from the motor, and may not be desirable in environments where motor noise is a concern.

No.	Name	Setting Range	Default
n3-14	High Frequency Injection During Overexcitation Deceleration	0, 1	0

Setting 0: Disabled

Setting 1: Enabled

■ n3-21: High Slip Suppression Current Level

If the motor current exceeds the value set to n3-21 during Overexcitation Deceleration due to flux saturation, the drive automatically reduces the overexcitation gain. Parameter n3-21 is set as a percentage of the drive rated current.

Set this parameter to a relatively low value to optimize deceleration. If overcurrent, oL1, or oL2 occur during Overexcitation Deceleration, reduce the high slip suppression current level.

No.	Name	Setting Range	Default
n3-21	High Slip Suppression Current Level	0 to 150%	100%

■ n3-23: Overexcitation Operation Selection

Limits the Overexcitation Deceleration operation selected in parameter L3-04 to forward only or reverse only.

No.	Name	Setting Range	Default
n3-23	Overexcitation Operation Selection	0 to 2	0

Setting 0: Overexcitation Operation as Selected in L3-04 in Forward and Reverse Direction

Setting 1: Overexcitation Operation as Selected in L3-04 in Forward Direction Only

Setting 2: Overexcitation Operation as Selected in L3-04 in Reverse Direction Only

◆ n5: Feed Forward Control

Enabling Feed Forward improves the responsiveness of the drive to speed reference changes in applications where a high speed control proportional gain setting (ASR gain, C5-01, C5-03) would lead to problems with overshoot, undershoot, or oscillation. *Figure 5.111* gives an example of overshoot reduction by Feed Forward. Parameters related to this function and the function principle are illustrated in *Figure 5.112*. Feed Forward can only be used in CLV, CLV/PM, or AOLV/PM (A1-02 = 3, 6, or 7).

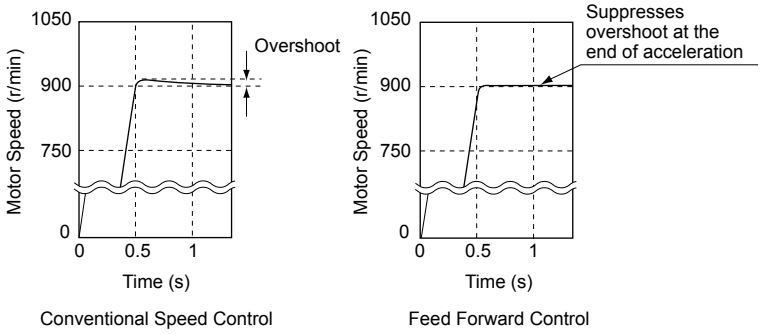

Figure 5.111 Overshoot Suppression by Feed Forward Control

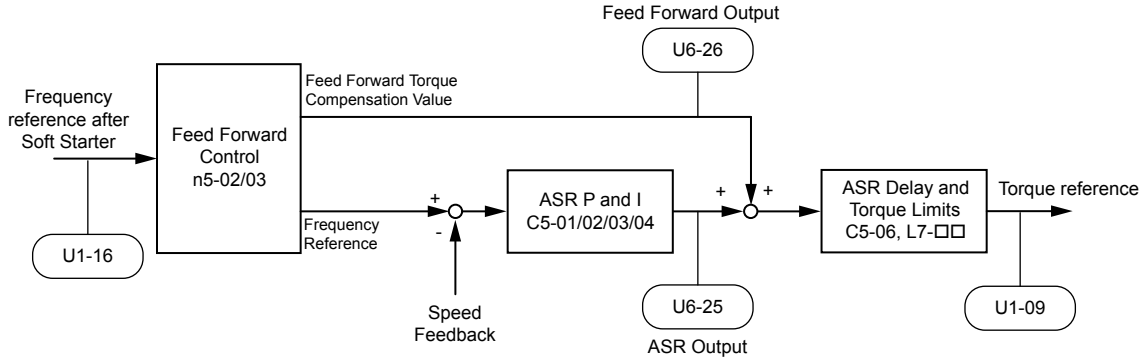

Figure 5.112 Feed Forward Control

Note:
1. Feed Forward can only be used in CLV, AOLV/PM, and CLV/PM control modes.
2. Prior to using Feed Forward, always perform Auto-Tuning or manually enter the correct motor data. Perform ASR Auto-Tuning to set the speed loop gain (C5-01), or adjust it manually. Fine-tune the other speed control loop parameters (C5-□□) if required.
3. If not restricted by the application, use Inertia Auto Tuning (T1-01, T2-01 = 8) to automatically optimize Feed Forward parameters. If Inertia Auto Tuning cannot be performed, manually set parameters related to Feed Forward.

■ n5-01: Feed Forward Control Selection

Enables and disables the Feed Forward function.

No.	Name	Setting Range	Default
n5-01	Feed Forward Control Selection	0, 1	0

Setting 0: Disabled

Setting 1: Enabled

■ n5-02: Motor Acceleration Time

Sets the time required to accelerate the motor from a full stop to the rated speed at the rated torque.

No.	Parameter Name	Setting Range	Default
n5-02	Motor Acceleration Time	0.001 to 10.000 s	Determined by C6-01, E5-01 and o2-04

Set this value automatically with Inertia Auto-Tuning. If Inertia Auto-Tuning cannot be performed, use one of the following methods to determine the setting value for this parameter.

Calculation

The motor acceleration time can be calculated by one of the following formulas:

$n5\text{-}02 = \dfrac{\pi \cdot J_{Motor} \cdot n_{rated}}{30 \cdot T_{rated}}$	Where: • J_{Motor} is the motor inertia in kgm/s^2. • n_{rated} is the rated speed of the motor in r/min. • T_{rated} is the rated torque of the motor in N•m.

or

$n5\text{-}02 = \dfrac{4 \cdot \pi \cdot J_{Motor} \cdot f_{rated}}{p \cdot T_{rated}}$	Where: • J_{Motor} is the motor inertia in kgm^2. • f_{rated} is the rated frequency of the motor in Hz. • p is the number of motor poles (not pole pairs). • T_{rated} is the rated torque of the motor in N•m.

Measuring Acceleration Time

Take the following steps when measuring the motor acceleration time:

1. Select the control mode; CLV (A1-02 = 3), AOLV/PM (A1-02 = 6), or CLV/PM (A1-02 = 7).
2. Decouple motor and load.
3. Perform Auto-Tuning or manually enter the correct motor data.
4. Properly set up the speed loop (ASR).
5. Set the acceleration time to zero.
6. Set the forward torque limit in parameter L7-01 to 100%.
7. Set the frequency reference equal to the motor rated speed.
8. While monitoring the motor speed in U1-05, start the motor in the forward direction and measure the time it takes to reach the rated speed.
9. Reverse the parameter settings above and set the measured time to parameter n5-02.

■ n5-03: Feed Forward Control Gain

Sets the inertia ratio of the load connected to the motor. This value can be set automatically by Inertia Auto-Tuning.

No.	Parameter Name	Setting Range	Default
n5-03	Feed Forward Control Gain	0.00 to 100.00	1.00

Set this value automatically with Inertia Auto-Tuning. If Inertia Auto Tuning cannot be performed, determine the value for parameter n5-03 using the following steps:

1. Select the control mode; CLV (A1-02 = 3), AOLV/PM (A1-02 = 6), or CLV/PM (A1-02 = 7).
2. Set parameter n5-02 correctly.
3. Couple motor and load.
4. Set the acceleration time in C1-01 to 0.
5. Set the torque limits in the L7-□□ parameters to a value that will easily be reached during the test (T_{Lim_Test}).
6. Set the frequency reference equal to a value in the upper speed range of the machine (f_{ref_Test}).
7. While monitoring the motor speed in U1-05, start the motor in the forward direction and measure the time it takes to reach the reference speed (t_{accel}).
8. Reverse the parameter settings above and calculate the set value for parameter n5-03 using the formula below.

$n5\text{-}03 = \dfrac{t_{accel} \cdot T_{Lim\_Test} \cdot f_{rated}}{n5\text{-}02 \cdot f_{ref\_Test} \cdot 100} - 1$	Where: • t_{accel} is the measured acceleration time in s. • f_{rated} is the rated frequency of the motor in Hz. • T_{Lim_Test} is torque limit setting during the test (%). • f_{ref_Test} is the frequency reference during the test in Hz.

◆ n6: Online Tuning

Online Tuning prevents loss from insufficient torque and diminished speed control accuracy due to fluctuating motor temperature.

■ n6-01: Online Tuning Selection

Selects the type of motor data Online Tuning uses for OLV control.

No.	Name	Setting Range	Default
n6-01	Online Tuning Selection	0 to 2	0

Setting 0: Disabled

Setting 1: Line-to-line Resistance Tuning

This setting enables line-to-line resistance online tuning. This procedure is effective for speed values up to 6 Hz and improves the overload capacity in the low speed range by adjusting the value set for the motor resistance.

Setting 2: Voltage Correction

The drive adjusts the output voltage during run to improve overload tolerance and minimize the effects of high temperatures on speed accuracy.

Note: This setting can only be selected when the Energy Saving function is disabled (b8-01 = 0).

■ n6-05: Online Tuning Gain

Sets the compensation gain for the voltage correction in the Online Tuning function (n6-01 = 2).

Although this parameter rarely needs to be changed, increase the set value in steps of 0.1 if an overload fault occurs during voltage correction

No.	Name	Setting Range	Default
n6-05	Online Tuning Gain	0.1 to 50.0	1.0

◆ n8: PM Motor Control Tuning

These parameters adjust the control performance in the vector control modes for permanent magnet motors.

■ n8-01: Initial Rotor Position Estimation Current

Sets the current used for initial rotor position estimation as a percentage of the motor rated current (E5-03). If the motor nameplate lists an “Si” value, that value should be entered here. There is normally no need to change this parameter from the default value.

Note: This parameter is only available in AOLV/PM or CLV/PM.

No.	Name	Setting Range	Default
n8-01	Initial Rotor Position Estimation Current	0 to 100%	50%

■ n8-02: Pole Attraction Current

In AOLV/PM control, this parameter sets the current to attract the rotor after detecting the initial rotor position. The value is set as a percentage of the motor rated current. Increase this setting to increase the starting torque.

In CLV/PM control, this parameter sets the current used to detect the rotor pole when tuning the phase-Z pulse position. Set this parameter to a large value if the motor does not follow the target position during the phase-Z pulse position tuning. Set to a small value if the motor vibrates. There is normally no need to change this parameter from the default value.

No.	Name	Setting Range	Default
n8-02	Pole Attraction Current	0 to 150%	80%

■ n8-03: Current Startup Time

Sets the current startup time to detect the rotor pole when tuning the phase-Z pulse position. Set this parameter to a large value if the motor vibrates during the phase-Z pulse position tuning. There is normally no need to change this parameter from the default value.

Note: This parameter is not available in models 4A0930 and 4A1200.

No.	Name	Setting Range	Default
n8-03	Current Startup Time	1.5 to 5.0 s	1.5 s

■ n8-04: Pole Attraction Time

Sets the pole attraction time to detect the rotor pole during the phase-Z pulse position tuning. Set this parameter to a large value if the motor vibrates during the phase-Z pulse position tuning. There is normally no need to change this parameter from the default value.

Note: This parameter is not available in models 4A0930 and 4A1200.

No.	Name	Setting Range	Default
n8-04	Pole Attraction Time	1.5 to 5.0 s	1.5 s

■ n8-11: Induction Voltage Estimation Gain 2

Sets the gain for speed estimation. There is normally no need to change this parameter from the default value.

Note: This parameter is not available in models 4A0930 and 4A1200.

No.	Name	Setting Range	Default
n8-11	Induction Voltage Estimation Gain 2	0.0 to 1000.0	Determined by n8-72 <1>

<1> When n8-72 is set to 0, the default setting is 50.0 and when n8-72 is set to 1, the default setting is 150.0. ***Refer to n8-14: Polarity Compensation Gain 3 on page 374*** for a list of monitors.

■ n8-14: Polarity Compensation Gain 3

Sets the gain for speed estimation. There is normally no need to change this parameter from the default value.

Note: This parameter is not available in models 4A0930 and 4A1200.

No.	Name	Setting Range	Default
n8-14	Polarity Compensation Gain 3	0.000 to 10.000	1.000

■ n8-15: Polarity Compensation Gain 4

Sets the gain for speed estimation. There is normally no need to change this parameter from the default value.

Note: This parameter is not available in models 4A0930 and 4A1200.

No.	Name	Setting Range	Default
n8-15	Polarity Compensation Gain 4	0.000 to 10.000	0.500

■ n8-21: Motor Ke Gain

Sets the gain for speed estimation. There is normally no need to change this parameter from the default value.

Note: This parameter is not available in models 4A0930 and 4A1200.

No.	Name	Setting Range	Default
n8-21	Motor Ke Gain	0.80 to 1.00	0.90

■ n8-35: Initial Rotor Position Detection Selection

Selects how the rotor position is detected at start.

Note:
1. In CLV/PM, the drive performs a magnetic pole search the first time it starts the motor. After that, rotor position is calculated from the PG encoder signal and saved until the drive is switched off. Parameter n8-35 determines how this initial pole search operates.
2. High Frequency Injection and pulse injection for rotor position detection (n8-35 = 1 or 2) can be used with IPM motors only. When using an SPM motor, select the pull in method to find the initial position of the rotor (n8-35 = 0).
3. This parameter is only available in AOLV/PM or CLV/PM.

No.	Name	Setting Range	Default
n8-35	Initial Rotor Position Detection Selection	0 to 2	1

Setting 0: Pull In

Starts the rotor using pull-in current.

Setting 1: High Frequency Injection

High frequency is injected to detect the rotor position. Some noise may be generated from the motor at start.

Setting 2: Pulse Injection

A pulse signal is injected into the motor to detect the rotor position.

■ n8-36: High Frequency Injection Level

Sets the frequency level used for High Frequency Injection. Enabled when n8-57 = 1. In this case ***Refer to T2-01: PM Motor Auto-Tuning Mode Selection on page 186*** for details.

Note: This parameter is enabled when n8–35 (Initial Rotor Position Detection Selection) = 1 (High Frequency Injection) or n8–57 (High Frequency Injection) = 1 (Enabled).

No.	Name	Setting Range	Default
n8-36	High Frequency Injection Level	200 to 1000 Hz	500 Hz

■ n8-37: High Frequency Injection Amplitude

Sets the amplitude for High Frequency Injection as a percentage of the voltage when the voltage class base is 100% (200 V Class is 200 V, 400 V Class is 400 V, and 600 V Class is 575 V). Enabled when n8-57 = 1. There is normally no need to change this parameter from the default value.

Note: This parameter is not available in models 4A0930 and 4A1200.

No.	Name	Setting Range	Default
n8-37	High Frequency Injection Amplitude	0.0 to 50.0%	20.0%

■ n8-39: Low Pass Filter Cutoff Frequency for High Frequency Injection

Sets a cutoff frequency of a low pass filter for high frequency injection. There is normally no need to change this parameter from the default value.

Note: This parameter is enabled when n8–35 (Initial Rotor Position Detection Selection) = 1 (High Frequency Injection) or n8–57 (High Frequency Injection) = 1 (Enabled).

No.	Name	Setting Range	Default
n8-39	Low Pass Filter Cutoff Frequency for High Frequency Injection	0 to 1000 Hz	50 Hz

■ n8-45: Speed Feedback Detection Control Gain (for PM Motors)

Sets the gain for internal speed feedback detection control. Although this parameter rarely needs to be changed, adjustment may be necessary under the following conditions:

- Increase this setting if motor oscillation or hunting occurs.
- Decrease this setting in increments of 0.05 to decrease drive responsiveness.

Note: This parameter is only available in OLV/PM.

No.	Name	Setting Range	Default
n8-45	Speed Feedback Detection Control Gain (for PM Motors)	0.00 to 10.00	0.80

■ n8-47: Pull-In Current Compensation Time Constant (for PM Motors)

Sets the time constant for pull-in current to match the actual current.

Although this setting rarely needs to be changed, adjustment may be necessary under the following conditions:

- Increase this setting when it takes too long for the reference value of the pull-in current to match the target value.
- Decrease this setting if motor oscillation occurs.

Note: This parameter is only available in OLV/PM.

No.	Name	Setting Range	Default
n8-47	Pull-In Current Compensation Time Constant (for PM Motors)	0.0 to 100.0 s	5.0 s

■ n8-48: Pull-In Current (for PM Motors)

Sets the d-Axis current during no-load operation at a constant speed. Set as a percentage of the motor rated current (E5-03).

- Increase this setting when hunting occurs or the motor speed is unstable while running at a constant speed.

- Slightly reduce this value if there is too much current when driving a light load at a constant speed.

Note: This parameter is only available in OLV/PM.

No.	Name	Setting Range	Default
n8-48	Pull-In Current (for PM Motors)	20 to 200%	30%

■ n8-49: d-Axis Current for High Efficiency Control (for PM Motors)

Sets the d-Axis current reference when running with high load at constant speed. When using an IPM motor, this parameter uses the reluctance torque to increase the efficiency and reduce energy consumption. Set this parameter to 0 when using an SPM motor.

Although this setting rarely needs to be changed, adjustment may be necessary under the following conditions:

- Lower the setting if motor operation is unstable when driving heavy loads.
- If motor parameters (E5-□□) have been changed, this value will be reset to 0 and will require readjustment.

Note: This parameter is only available in OLV/PM.

No.	Name	Setting Range	Default
n8-49	d Axis Current for High Efficiency Control (for PM Motors)	-200.0 to 0.0%	Determined by E5-01

■ n8-51: Acceleration/Deceleration Pull-In Current (for PM Motors)

Sets the pull-in current during acceleration and deceleration as a percentage of the motor rated current (E5-03).

Adjustment may be necessary under the following conditions:

- Increase this setting when a large amount of starting torque is required.
- Lower this setting if there is excessive current during acceleration.

Note: This parameter is only available in OLV/PM.

No.	Name	Setting Range	Default
n8-51	Acceleration/Deceleration Pull-In Current (for PM Motors)	0 to 200%	50%

■ n8-54: Voltage Error Compensation Time Constant

Sets the time constant for voltage error compensation.

Adjustment may be necessary under the following conditions:

- Adjust the value when hunting occurs at low speed.
- Increase the value in steps of 0.1 when hunting occurs with sudden load changes. Set the value to 0 to disable the compensation if increasing n8-54 does not help.
- Increase the value when oscillations occur at start.

Note: This parameter is only available in OLV/PM.

No.	Name	Setting Range	Default
n8-54	Voltage Error Compensation Time Constant	0.00 to 10.00	1.00

■ n8-55: Load Inertia

Sets the ratio between motor inertia and the inertia of the connected machinery. If this value is set too low, the motor may not start very smoothly and trigger an STo (Pull-Out Detection) fault.

Increase this setting for large inertia loads or to improve speed control response. A high setting with low inertia load may cause oscillation.

Note: This parameter is only available in OLV/PM.

No.	Name	Setting Range	Default
n8-55	Load Inertia	0 to 3	0

Setting 0: Below 1:10

The inertia ratio between the motor and the load is lower than 1:10.

Setting 1: Between 1:10 and 1:30

The inertia ratio between the motor and the load is between 1:10 and 1:30. Set n8-55 to 1 if an STo fault occurs as a result of impact load or sudden acceleration/deceleration when n8-55 = 0.

Setting 2: Between 1:30 and 1:50

The inertia ratio between the motor and the load is between 1:30 and 1:50. Set n8-55 to 2 if an STo fault occurs as a result of impact load or sudden acceleration/deceleration when n8-55 = 1.

Setting 3: Beyond 1:50

The inertia ratio between the motor and the load is higher than 1:50. Set n8-55 to 3 if an STo fault occurs as a result of impact load or sudden acceleration/deceleration when n8-55 = 2.

■ n8-57: High Frequency Injection

Injects a high frequency into the motor to detect motor speed.

Note: This parameter is only available in AOLV/PM.

No.	Name	Setting Range	Default
n8-57	High Frequency Injection	0, 1	0

Setting 0: Disabled

Disable n8-57 with SPM motors. The speed control range will be limited to approximately 1:20.

Setting 1: Enabled

Enable n8-57 with IPM motors. This allows precise speed detection in a speed control range of approximately 1:100. In this case, perform High Frequency Injection Parameter Tuning after setting the motor parameters. High Frequency Injection cannot be used with an SPM motor. ***Refer to T2-01: PM Motor Auto-Tuning Mode Selection on page 186*** for details.

Note:
1. This function generates some audible noise in the motor up to a certain speed.
2. Set E1-09 to 0.0 when using zero speed control.

■ n8-62: Output Voltage Limit (for PM Motors)

Sets the output voltage limit to prevent voltage saturation. Do not set this value higher than the actual input voltage.

Note: This parameter is only available in OLV/PM, AOLV/PM, and CLV/PM.

No.	Name	Setting Range	Default
n8-62	Output Voltage Limit (for PM Motors)	0.0 to 230.0 Vac <1>	200 Vac <1>

<1> Values shown are specific to 200 V class drives. Double value for 400 V class drives. Multiply the value by 2.875 for 600 V class drives.

■ n8-65: Speed Feedback Detection Control Gain during ov Suppression

Sets the gain for internal speed feedback detection control when overvoltage suppression is active. Although this setting rarely needs to be changed, adjustment may be necessary under the following conditions:

- Increase this setting if motor oscillation or hunting occurs when ov suppression is active.
- Decrease this setting in increments of 0.05 to decrease the drive responsiveness during ov suppression.

Note: This parameter is only available in AOLV/PM.

No.	Name	Setting Range	Default
n8-65	Speed Feedback Detection Control Gain during ov Suppression	0.00 to 10.00	1.50

■ n8-69: Speed Calculation Gain

Sets the proportional gain for Phase Locked Loop (PLL) control of an extended observer.

There is normally no need to change this parameter from the default value.

Note: This parameter is valid in drive software versions PRG: 1015 and later.

No.	Name	Setting Range	Default
n8-69	Speed Calculation Gain	0.00 to 20.00	1.00

■ n8-72: Speed Estimation Method Selection

Sets the method of the speed estimation. There is normally no need to change this parameter from the default value.

Note: This parameter is not available in models 4A0930 and 4A1200.

No.	Name	Setting Range	Default
n8-72	Speed Estimation Method Selection	0, 1	1

Setting 0: Conventional Method

Setting 1: A1000 Method

■ n8-84: Initial Polarity Estimation Timeout Current

Sets the current to determine polarity for the initial polarity calculation as a percentage of the motor rated current.

Set the value in % unit (E5-03 = 100%)

Note:
1. This parameter is only available in AOLV/PM and CLV/PM.
2. If operating in AOLV/PM (A1-02 = 6) or CLV/PM (A1-02 = 7), the drive determines motor polarity by performing initial polarity estimation when it starts the motor (this is done only the first time the motor is started when using CLV/PM).
   The drive may begin operating in the wrong direction if it determines motor polarity incorrectly as the opposite direction of the Run command.
   Monitor U6-57 displays the deviation from the integrated current, making it possible to see if initial polarity estimation has successfully determined the motor polarity.
3. If an “Si” value is listed on a Yaskawa motor nameplate, set n8-84 to “Si” value x 2 or more.
4. Increase the setting value when dv3, dv4, or LSo is detected.

No.	Name	Setting Range	Default
n8-84	Initial Polarity Estimation Timeout Current	0 to 150%	100%

5.10 o: Operator Related Settings

These parameters control the various functions, features, and display of the digital operator.

◆ o1: Digital Operator Display Selection

These parameters determine the data display on the digital operator.

■ o1-01: Drive Mode Unit Monitor Selection

When o1-02 is set to 5, any U monitors can be displayed. This parameter will select the monitors. Pressing the up arrow key will display the following data: frequency reference → rotational direction → output frequency → output current → o1-01 selection.

Parameter o1-01 selects the content of the last monitor in this sequence. This is done by entering the "1□□" part of "U1-□□". Certain monitors are not available in some control modes. There is no effect like this on an LCD operator.

No.	Name	Setting Range	Default
o1-01	Drive Mode Unit Monitor Selection	104 to 813 U1-04 (Control Mode) to U8-13 (DWEZ Custom Monitor 3) <1>	106 (U1-06)

<1> U2-□□ and U3-□□ parameters cannot be selected.

■ o1-02: User Monitor Selection after Power Up

Selects which monitor parameter is displayed upon power up. *Refer to U: Monitor Parameters on page 386* for a list of monitors.

No.	Name	Setting Range	Default
o1-02	User Monitor Selection after Power Up	1 to 5	1

Setting 1: Frequency Reference (U1-01)

Setting 2: Motor Direction

Setting 3: Output Frequency (U1-02)

Setting 4: Output Current (U1-03)

Setting 5: User-selected Monitor (Set by o1-01)

■ o1-03: Digital Operator Display Selection

Sets the units used to display the frequency reference and output frequency. Set o1-03 to 3 for user-set units before setting parameters o1-10 and o1-11.

No.	Name	Setting Range	Default
o1-03	Digital Operator Display Selection	0 to 3	Determined by A1-02

Setting 0: 0.01 Hz Units

Setting 1: 0.01% Units (100% = Max. Output Frequency)

Setting 2: r/min Units (Calculated by the Max. Output Frequency and the No. of Motor Poles)

Setting 3: User-set Units (Use o1-10, o1-11)

Set the value used for the maximum frequency reference to o1-10. Set the placement of the decimal point in this number to o1-11.

For example, to have the maximum output frequency displayed as "100.00", set o1-10 = 10000 and o1-11 = 2 (i.e., 10000 with 2 decimal points).

Note: 1. Parameter o1-03 allows the programmer to change the units used in the following parameters and monitors:
U1-01: frequency reference

U1-02: output frequency
U1-05: motor speed
U1-16: output frequency after softstarter (accel/decel ramp generator)
d1-01 to d1-17: frequency references

2. Setting o1-03 to 2 requires entering the number of motor poles to E2-04, E4-04, and E5-04.

■ o1-04: V/f Pattern Display Unit

Determines the units used for the frequency reference when setting parameters that create the V/f pattern: E1-04, E1-06, E1-09, E1-11, and E2-04. For motor 2, this includes parameters E3-04, E3-06, E3-07, E3-09, and E3-11. Enabled only in vector control modes (CLV, AOLV/PM, CLV/PM).

No.	Name	Setting Range	Default
o1-04	V/f Pattern Display Unit	0, 1	0

Setting 0: Hertz

Setting 1: r/min

Note: For motor 2, o1-04 can only be set to 0 for Hertz.

■ o1-05: LCD Contrast Control

Sets the brightness of the digital operator. The lower the setting, the brighter the LCD contrast. The higher the setting, the darker the LCD contrast.

No.	Name	Setting Range	Default
o1-05	LCD Contrast Control	0 to 5	3

■ o1-10: User-Set Display Units Maximum Value

Determines the display value that is equal to the maximum output frequency.

No.	Name	Setting Range	Default
o1-10	User-Set Display Units Maximum Value	1 to 60000	Determined by o1-03

■ o1-11: User-Set Display Units Decimal Display

Determines how many decimal points should be used to set and display the frequency reference.

No.	Name	Setting Range	Default
o1-11	User-Set Display Units Decimal Display	0 to 3	Determined by o1-03

Setting 0: No Decimal Point
Setting 1: One Decimal Point
Setting 2: Two Decimal Points
Setting 3: Three Decimal Points

◆ o2: Digital Operator Keypad Functions

These parameters determine the functions assigned to the operator keys.

■ o2-01: LO/RE (LOCAL/REMOTE) Key Function Selection

Determines whether the LO/RE key on the digital operator will be enabled for switching between LOCAL and REMOTE.

No.	Name	Setting Range	Default
o2-01	LO/RE Key Function Selection	0, 1	1

Setting 0: Disabled
The LO/RE key is disabled.

Setting 1: Enabled
The LO/RE switches between LOCAL and REMOTE operation. Switching is possible during stop only. When LOCAL is selected, the LED indicator on the LO/RE key will light up.

WARNING! *Sudden Movement Hazard. The drive may start unexpectedly if the Run command is already applied when switching from LOCAL mode to REMOTE mode when b1-07 = 1, resulting in death or serious injury. Check all mechanical or electrical connections thoroughly before making any setting changes to o2-01 and b1-07. Table 5.44 lists the setting combinations for o2-01 and b1-07.*

Table 5.44 LO/RE Key and b1-07

o2-01	b1-07	Switch from LOCAL to REMOTE	Switch from REMOTE to LOCAL
0	0	Not possible	Not possible
	1	Not possible	Not possible
1	0	Will not run until a new Run command is entered.	Run not possible
	1	If a Run command is entered, the drive will start running as soon as the LO/RE key is pushed to change from LOCAL to REMOTE.	Run not possible

■ o2-02: STOP Key Function Selection

Determines if the STOP key on the digital operator will stop drive operation when the drive is controlled from a remote source (i.e., not from digital operator).

No.	Name	Setting Range	Default
o2-02	STOP Key Function Selection	0, 1	1

Setting 0: Disabled

Setting 1: Enabled

The STOP key will terminate drive operation even if the Run command source is not assigned to the digital operator. Cycle the Run command to restart the drive if the drive has been stopped by pressing the STOP key.

■ o2-03: User Parameter Default Value

After completely setting up drive parameters, save the values as user-set defaults with parameter o2-03. After saving the values, parameter A1-03 (Initialize Parameters) will offer the choice of "1110: User Initialize". Selecting 1110 resets all parameters to the user-set default values. *Refer to A1-03: Initialize Parameters on page 199* for details on drive initialization.

No.	Name	Setting Range	Default
o2-03	User Parameter Default Value	0 to 2	0

Setting 0: No Change (Awaiting Command)

Setting 1: Set User Initialize Values

The current parameter settings are saved as user-set default for a later User Initialization. Setting o2-03 to 1 and pressing the ENTER key saves the values and returns the display to 0.

Setting 2: Clear User Initialize Values

All user-set defaults for “User Initialize” are cleared. Setting o2-03 to 2 and pressing the ENTER key erases the values and returns the display to 0.

■ o2-04: Drive Model Selection

Set this parameter when replacing the control board or the terminal board. *Refer to Defaults by Drive Model and Duty Rating ND/HD on page 663* for information on drive model selection.

NOTICE: *Drive performance will suffer and protective functions will not operate properly if the correct drive capacity is not set to o2-04.*

No.	Name	Setting Range	Default
o2-04	Drive Model Selection	-	Determined by drive capacity

Note: Change o2-04 setting only when necessary.

■ o2-05: Frequency Reference Setting Method Selection

Determines if the ENTER key must be pressed after changing the frequency reference using the digital operator while in the Drive Mode.

No.	Name	Setting Range	Default
o2-05	Frequency Reference Setting Method Selection	0, 1	0

Setting 0: ENTER Key Required

The ENTER key must be pressed every time the frequency reference is changed using the digital operator for the drive to accept the change.

Setting 1: ENTER Key Not Required

The output frequency changes immediately when the reference is changed by the up or down arrow keys on the digital operator. The ENTER key does not need to be pressed. The frequency reference (Fref) is saved to memory after remaining unchanged for 5 seconds.

■ o2-06: Operation Selection when Digital Operator is Disconnected

Determines whether the drive will stop when the remote control extension cable of the digital operator is removed in LOCAL mode or when b1-02 or b1-16 is set to 0. When the operator is reconnected, the display will indicate that it was disconnected.

No.	Name	Setting Range	Default
o2-06	Digital Operator Disconnection Operation	0, 1	1

Setting 0: Continue Operation

The operation continues.

Setting 1: Trigger a Fault

The operation stops and triggers an oPr fault. The motor coasts to stop.

■ o2-07: Motor Direction at Power Up when Using Operator

Determines the direction the motor will rotate after the drive is powered up and the Run command is given from the digital operator.

Note: This parameter is effective only when the Run command is set to be given from the digital operator (b1-02, b1-16 = 0).

No.	Name	Setting Range	Default
o2-07	Motor Direction at Power Up when Using Operator	0, 1	0

Setting 0: Forward

Setting 1: Reverse

■ o2-19: Selection of Parameter Write during Uv

Selects whether parameter settings can be changed during a DC bus undervoltage condition. To be used with 24 V Power Supply option (PS-A10L, PS-A10H) revision B or later.

Note: Enabling this function may trigger a CPF06 fault when used with a 24 V Power Supply option revision earlier than B, as the parameter changes might not occur correctly.

No.	Name	Setting Range	Default
o2-19	Selection of Parameter Write during Uv	0, 1	0

Setting 0: Disabled

Setting 1: Enabled

◆ o3: Copy Function

These parameters control the Copy function of the digital operator. The Copy function stores parameter settings into the memory of the digital operator to facilitate the transfer of those settings to other drives that are the same model, capacity, and same control mode setting. ***Refer to Copy Function Related Displays on page 445*** for a description of errors and displays.

■ o3-01: Copy Function Selection

Instructs the drive to Read, Write, or Verify parameter settings.

No.	Name	Setting Range	Default
o3-01	Copy Function Selection	0 to 3	0

Setting 0: Copy Select (No Function)

Setting 1: INV --> OP READ

Copies all parameters from the drive to the digital operator.

Note: Set o3-02 to 1 to unlock copy protection.

Setting 2: OP --> INV WRITE

Copies all parameters from the digital operator to the drive.

Setting 3: OP<-->INV VERIFY

Compares the parameters in the drive with the parameter settings saved on the digital operator for matches.

■ o3-02: Copy Allowed Selection

Allows and restricts the use of the Copy function.

No.	Name	Setting Range	Default
o3-02	Copy Allowed Selection	0, 1	0

Setting 0: Disabled

Setting 1: Enabled

◆ o4: Maintenance Monitor Settings

■ o4-01: Cumulative Operation Time Setting

Sets the cumulative operation time of the drive. The user can also manually set this parameter to begin keeping track of operation time from some desired value. Total operation time can be viewed in monitor U4-01.

Note: The value in o4-01 is set in 10 h units. For example, a setting of 30 will set the cumulative operation time counter to 300 h. 300 h will also be displayed in monitor U4-01.

No.	Name	Setting Range	Default
o4-01	Cumulative Operation Time Setting	0 to 9999	0

■ o4-02: Cumulative Operation Time Selection

Selects the conditions for how the drive keeps track of its total operation time. This time log can be viewed in monitor U4-01.

No.	Name	Setting Range	Default
o4-02	Cumulative Operation Time Selection	0, 1	0

Setting 0: Power On Time

The drive logs the time it is connected to a power supply, regardless of whether the motor is running.

Setting 1: Run Time

The drive logs the time that the output is active including when the Run command is active (even if the motor is not rotating) and when there is voltage output.

■ o4-03: Cooling Fan Operation Time Setting

Sets the value for how long the cooling fan has been operating. This value can be viewed in monitor U4-03. Parameter o4-03 also sets the base value used for the cooling fan maintenance, which is displayed in U4-04. Reset this parameter to 0 after replacing the cooling fan.

Note:
1. The value in o4-03 increases after every 10 hours of use. A setting of 30 will set the cooling fan operation time counter to 300 h. “300” will be displayed in monitor U4-03.
2. The cooling fan may require maintenance at an earlier date in harsher environments.

No.	Name	Setting Range	Default
o4-03	Cooling Fan Operation Time Setting	0 to 9999	0

■ o4-05: Capacitor Maintenance Setting

Starts estimates for capacitor maintenance times from this setting value. This value should be reset to 0 when the capacitors have been replaced.

Note: The actual maintenance time will depend on the environment where the drive is used.

No.	Name	Setting Range	Default
o4-05	Capacitor Maintenance Setting	0 to 150%	0%

■ o4-07: DC Bus Pre-Charge Relay Maintenance Setting

Starts estimates for soft charge bypass relay maintenance times from this setting value. This value should be reset to 0 when the bypass relay has been replaced.

Note: The actual maintenance time will depend on the environment where the drive is used.

No.	Name	Setting Range	Default
o4-07	DC Bus Pre-charge Relay Maintenance Setting	0 to 150%	0%

■ o4-09: IGBT Maintenance Setting

Sets the value of the IGBT maintenance time displayed in U4-07 as a percentage of the total expected performance life. Reset this value to 0 after replacing the IGBTs.

Note: The actual maintenance time will depend on the environment where the drive is used.

No.	Name	Setting Range	Default
o4-09	IGBT Maintenance Setting	0 to 150%	0%

■ o4-11: U2, U3 Initialization

Resets the fault trace and fault history monitors (U2-□□ and U3-□□).

Note: Initializing the drive using A1-03 does not reset these monitors.

No.	Name	Setting Range	Default
o4-11	U2, U3 Initialization	0, 1	0

Setting 0: No Action

The drive keeps the previously saved record concerning fault trace and fault history.

Setting 1: Reset Fault Data

Resets the data for the U2-□□ and U3-□□ monitors. Setting o4-11 to 1 and pressing the ENTER key erases fault data and returns the display to 0.

■ o4-12: kWh Monitor Initialization

Manually resets kWh monitors U4-10 and U4-11. Initializing the drive or cycling the power will not reset these monitors.

No.	Name	Setting Range	Default
o4-12	kWh Monitor Initialization	0, 1	0

Setting 0: No Action

The kWh data are maintained.

Setting 1: Reset kWh Data

Resets the kWh counter. The monitors U4-10 and U4-11 will display “0” after they are initialized. Setting o4-12 to 1 and pressing the ENTER erases kWh data and returns the display to 0.

■ o4-13: Number of Run Commands Counter Initialization

Resets the Run command counter displayed in U4-02. Initializing the drive or cycling the power does not reset this monitor.

No.	Name	Setting Range	Default
o4-13	Number of Run Commands Counter Initialization	0, 1	0

Setting 0: No Action

The Run command data are kept.

Setting 1: Number of Run Commands Counter

Resets the Run command counter. The monitor U4-02 will show 0. Setting o4-13 to 1 and pressing the ENTER key erases the counter value and returns the display to 0.

◆ q: DriveWorksEZ Parameters

These parameters are reserved for use with DriveWorksEZ. Refer to the DriveWorksEZ manual for more information.

■ q1-01 to q6-07: Reserved for Use by DriveWorksEZ

These parameters are reserved for use with DriveWorksEZ. Refer to the DriveWorksEZ manual for more information.

◆ r: DriveWorksEZ Connection Parameters

These parameters are reserved for use with DriveWorksEZ. Refer to the DriveWorksEZ manual for more information.

■ r1-01 to r1-40: DriveWorksEZ Connection Parameters

These parameters are reserved for use with DriveWorksEZ. Refer to the DriveWorksEZ manual for more information.

◆ T: Motor Tuning

Auto-Tuning automatically sets and tunes parameters required for optimal motor performance.

Refer to Auto-Tuning on page 176 for details on Auto-Tuning parameters.

5.11 U: Monitor Parameters

Monitor parameters let the user view various aspects of drive performance using the digital operator display. Some monitors can be output from terminals FM and AM by assigning the specific monitor parameter number (U□-□□) to H4-01 and H4-04. ***Refer to H4-01, H4-04: Multi-Function Analog Output Terminal FM, AM Monitor Selection on page 326*** for details on assigning functions to an analog output.

◆ U1: Operation Status Monitors

Status monitors display drive status data such as output frequency and output current. ***Refer to U1: Operation Status Monitors on page 646*** for a complete list of U1-□□ monitors and descriptions.

◆ U2: Fault Trace

Use these monitor parameters to view the status of various drive aspects when a fault occurs.

This information is helpful for determining the cause of a fault. ***Refer to U2: Fault Trace on page 649*** for a complete list of U2-□□ monitors and descriptions.

U2-□□ monitors are not reset when the drive is initialized. ***Refer to o4-11: U2, U3 Initialization on page 384*** for instructions on how to reset these monitor values.

Note: Fault histories are not kept when CPF00, CPF01, CPF06, CPF24, oFA00, oFb00, oFC00, Uv1, Uv2, or Uv3 occur.

◆ U3: Fault History

These parameters display faults that have occurred during operation as well as the drive operation time when those faults occurred. ***Refer to U3: Fault History on page 650*** for a complete list of U3-□□ monitors and descriptions.

U3-□□ monitors are not reset when the drive is initialized. ***Refer to o4-11: U2, U3 Initialization on page 384*** for instructions on how to reset these monitor values.

Note: Fault histories are not kept when CPF00, CPF01, CPF06, CPF24, oFA00, oFb00, oFC00, Uv1, Uv2, or Uv3 occur.

◆ U4: Maintenance Monitors

Maintenance monitors show:

- Runtime data of the drive and cooling fans and number of Run commands issued
- Maintenance data and replacement information for various drive components
- kWh data
- Highest peak current that has occurred and output frequency at the time the peak current occurred
- Motor overload status information
- Detailed information about the present Run command and frequency reference source selection

Refer to U4: Maintenance Monitors on page 651 for a complete list of U4-□□ monitors and descriptions.

◆ U5: PID Monitors

These monitors display various aspects of PID control. ***Refer to PID Block Diagram on page 226*** for details on how these monitors display PID data.

Refer to U5: PID Monitors on page 653 for a complete list of U5-□□ monitors and descriptions.

◆ U6: Operation Status Monitors

Control monitors show:

- Reference data for the output voltage and vector control
- Data on PM motor rotor synchronization, forward phase compensation, and flux positioning
- Pulse data from the PG motor encoder
- Pulse data for Zero Servo control
- ASR and Feed Forward control monitors

  Refer to ***Figure 5.37*** and ***Figure 5.38*** on page ***246*** for details and an illustration showing where monitors are located in the ASR block.

- The offset value added to the frequency reference by the frequency offset function. ***Refer to Setting 44, 45, 46: Offset Frequency 1, 2, 3 on page 306***.
- The bias value added to the frequency reference by the Up/Down 2 function (see ***Setting 75, 76: Up 2/Down 2 Function***)

Refer to U6: Operation Status Monitors on page 654 for a complete list of U6-□□ monitors and descriptions.

◆ U8: DriveWorksEZ Monitors

These monitors are reserved for use with DriveWorksEZ.

A complete description of the U8-□□ monitors can be found in the DriveWorksEZ instruction manual.

This Page Intentionally Blank

6

Troubleshooting

This chapter provides descriptions of the drive faults, alarms, errors, related displays, and guidance for troubleshooting. This chapter can also serve as a reference guide for tuning the drive during a trial run.

6.1 SECTION SAFETY....390
6.2 MOTOR PERFORMANCE FINE-TUNING....392
6.3 DRIVE ALARMS, FAULTS, AND ERRORS....399
6.4 FAULT DETECTION....404
6.5 ALARM DETECTION....425
6.6 OPERATOR PROGRAMMING ERRORS....434
6.7 AUTO-TUNING FAULT DETECTION....439
6.8 COPY FUNCTION RELATED DISPLAYS....445
6.9 DIAGNOSING AND RESETTING FAULTS....447
6.10 TROUBLESHOOTING WITHOUT FAULT DISPLAY....449

6.1 Section Safety

⚠ DANGER

Electrical Shock Hazard

Before servicing, disconnect all power to the equipment. The internal capacitor remains charged even after the power supply is turned off. The charge indicator LED will extinguish when the DC bus voltage is below 50 Vdc. To prevent electric shock, wait for at least the time specified on the warning label, once all indicators are OFF, measure for unsafe voltages to confirm the drive is safe prior to servicing.

Failure to comply will result in death or serious injury.

⚠ WARNING

Arc Flash Hazard

It is possible that there is more than one source of power for equipment.

Obey the requirements for Electrical Safety in the Workplace and local codes for safe work procedures and applicable personal protective equipment (PPE). Failure to obey can cause serious injury or death.

Electrical Shock Hazard

Do not operate equipment with covers removed.

Failure to comply could result in death or serious injury.

The diagrams in this section may illustrate drives without covers or safety shields to display details. Be sure to reinstall covers or shields before operating the drives and run the drives according to the instructions described in this manual.

Always ground the motor-side grounding terminal.

Improper equipment grounding could result in death or serious injury by contacting the motor case.

Do not touch terminals before the capacitors have fully discharged.

Failure to comply could result in death or serious injury.

Before servicing, disconnect all power to the equipment. The internal capacitor remains charged even after the power supply is turned off. The charge indicator LED will extinguish when the DC bus voltage is below 50 Vdc. To prevent electric shock, wait for at least the time specified on the warning label; after all indicators are OFF, measure for unsafe voltages to confirm the drive is safe prior to servicing.

After blowing a fuse or tripping a GFCI, do not attempt to restart the drive or operate peripheral devices until five minutes pass and CHARGE lamp is OFF.

Failure to comply could result in death, serious injury, and damage to the drive.

Check wiring and peripheral device ratings to identify the cause of trips.

Contact your supplier if the cause cannot be identified.

Do not allow unqualified personnel to perform work on the drive.

Failure to comply could result in death or serious injury.

Installation, maintenance, inspection and servicing must be performed only by authorized personnel familiar with installation, adjustment and maintenance of AC drives.

Do not perform work on the drive while wearing loose clothing, jewelry, or without eye protection.

Failure to comply could result in death or serious injury.

Remove all metal objects such as watches and rings, secure loose clothing and wear eye protection before beginning work on the drive.

Do not remove covers or touch circuit boards while the power is on.

Failure to comply could result in death or serious injury.

⚠ WARNING

Fire Hazard

Tighten all terminal screws to the specified tightening torque.

Loose electrical connections could result in death or serious injury by fire due to overheating of electrical connections.

Do not use an improper voltage source.

Failure to comply could result in death or serious injury by fire.

Verify that the rated voltage of the drive matches the voltage of the incoming drive input power before applying power.

Do not use improper combustible materials.

Failure to comply could result in death or serious injury by fire.

Attach the drive to metal or other noncombustible material.

NOTICE

Observe proper electrostatic discharge procedures (ESD) when handling the drive and circuit boards.

Failure to comply may result in ESD damage to the drive circuitry.

Never connect or disconnect the motor from the drive while the drive is outputting voltage.

Improper equipment sequencing could result in damage to the drive.

Do not use unshielded cable for control wiring.

Failure to comply may cause electrical interference resulting in poor system performance. Use shielded twisted-pair wires and ground the shield to the ground terminal of the drive.

Do not allow unqualified personnel to use the product.

Failure to comply could result in damage to the drive or braking circuit.

Carefully review instruction manual TOBPC72060000 or TOBPC72060001 when connecting a dynamic braking option to the drive.

Do not modify the drive circuitry.

Failure to comply could result in damage to the drive and will void warranty.

Yaskawa is not responsible for modification of the product made by the user.

Check all the wiring after installing the drive and connecting other devices to ensure that all connections are correct.

Failure to comply could result in damage to the drive.

6.2 Motor Performance Fine-Tuning

This section offers helpful information for counteracting oscillation, hunting, and other problems that occur while performing a trial run. Refer to the appropriate control method in this section.

Note: This section describes commonly edited parameters that may be set incorrectly. Consult Yaskawa for more information on detailed settings and for fine-tuning the drive.

◆ Fine-Tuning V/f Control and V/f Control with PG

Table 6.1 Parameters for Fine-Tuning Performance in V/f and V/f w/PG

Problem	Parameter No.	Corrective Action	Default	Suggested Setting
Motor hunting and oscillation at speeds between 10 and 40 Hz	Hunting Prevention Gain Setting (n1-02)	• Reduce the setting if insufficient motor torque relative to the size of the load causes hunting. • Increase the setting when motor hunting and oscillation occur with a light load. • Reduce the setting if hunting occurs when using a motor with a relatively low inductance, such as a high-frequency motor or a motor with a larger frame size.	1.00	0.10 to 2.00
• Motor noise • Motor hunting and oscillation at speeds up to 40 Hz	Carrier Frequency Selection (C6-02)	• Increase the carrier frequency If the motor noise is too loud. • Lower the carrier frequency when motor hunting and oscillation occur at speeds up to 40 Hz. • The default setting for the carrier frequency depends on the drive model selection (o2-04) and the drive duty mode selection (C6-01).	1 (2 kHz)	1 to max. setting
• Poor torque or speed response • Motor hunting and oscillation	Torque Compensation Primary Delay Time (C4-02)	• Reduce the setting if motor torque and speed response are too slow. • Increase the setting if motor hunting and oscillation occur.	200 ms	100 to 1000 ms
• Poor motor torque at speeds below 10 Hz • Motor hunting and oscillation	Torque Compensation Gain (C4-01)	• Increase the setting if motor torque is insufficient at speeds below 10 Hz. • Reduce the setting if motor hunting and oscillation with a relatively light load.	1.00	0.50 to 1.50
• Poor motor torque at low speeds • Motor instability at motor start	Middle Output Frequency Voltage (E1-08) Minimum Output Frequency Voltage (E1-10)	• Increase the setting if motor torque is insufficient at speeds below 10 Hz. • Reduce the setting If motor instability occurs at motor start.	Depends on o2-04, Drive Model Selection	Default setting ±5 V
Poor speed precision (V/f control)	Slip Compensation Gain (C3-01)	Set the motor-rated current (E2-01), motor-rated slip (E2-02), and motor no-load current (E2-03), then adjust the slip compensation gain (C3-01).	0.0 (no slip compen-sation)	0.5 to 1.5
Poor speed precision (V/f control with PG)	ASR Proportional Gain 1 (C5-01) ASR Integral Time 1 (C5-02) <1> <2>	Adjust the ASR proportional gain 1 (C5-01) and the ASR integral time 1 (C5-02).	C5-01: 0.20 C5-02: 0.200 s	Proportional gain = 0.10 to 1.00 Integral time = 0.100 to 2.000 s

<1> ASR in V/f Control with PG only controls the output frequency, and does not allow the same high gain settings as CLV control.

<2> *Refer to C5: Automatic Speed Regulator (ASR) on page 246* for details on ASR.

◆ Fine-Tuning Open Loop Vector Control

Table 6.2 Parameters for Fine-Tuning Performance in OLV

Problem	Parameter No.	Corrective Action	Default	Suggested Setting
• Poor motor torque and speed response • Motor hunting and oscillation at speeds between 10 and 40 Hz	AFR Gain (n2-01)	• Gradually reduce the setting in 0.05 increments if motor torque and speed response are too slow. • Gradually increase the setting in 0.05 increments if motor hunting and oscillation occur.	1.00	0.50 to 2.00
• Poor motor torque and speed response • Motor hunting and oscillation at speeds between 10 and 40 Hz	AFR Time Constant 1 (n2-02)	• Gradually reduce the setting in 10 ms increments and check the performance to improve motor torque speed response. • Gradually increase the setting by 50 ms increments and check the performance if motor hunting and oscillation occur as a result of load inertia. **Note:** Ensure that n2-02 ≤ n2-03. When changing n2-02, set C4-02 (Torque Compensation Primary Delay Time Constant 1) accordingly.	50 ms	50 to 2000 ms
Overvoltage trips when accelerating, decelerating, or during sudden speed or load changes	AFR Time Constant 2 (n2-03)	• Gradually increase the setting in 50 ms increments if overvoltage occurs. • Gradually reduce the setting in 10 ms increments if response is slow. **Note:** Ensure that n2-02 ≤ n2-03. When making adjustments to n2-03, increase the value of C4-06 (Torque Compensation Primary Delay Time 2) proportionally.	750 ms	750 to 2000 ms
	Torque Compensation Primary Delay Time Constant 2 (C4-06)	• Gradually increase the setting in 10 ms increments and check the performance if overvoltage trips occur. • Gradually reduce the setting in 2 ms increments and check the performance if response is slow. **Note:** Ensure that C4-02 ≤ C4-06. When changing C4-06 (Torque Compensation Primary Delay Time Constant 2), increase the value of n2-03 proportionally.	150 ms	150 to 750 ms
• Poor motor torque and speed response • Motor hunting and oscillation	Torque Compensation Primary Delay Time Constant 1 (C4-02)	• Gradually reduce the setting in 2 ms increments and check the performance to improve motor torque speed response. • Gradually increase the setting in 10 ms increments if motor hunting and oscillation occur. **Note:** Ensure that C4-02 ≤ C4-06. When making adjustments to C4-02, increase the Speed Feedback Detection Control (AFR) Time Constant 1 (n2-02) proportionally.	20 ms	20 to 100 ms
Poor speed response and stability	Slip Compensation Primary Delay Time Constant (C3-02)	• Gradually reduce the setting in 10 ms increments if response is slow. • Gradually increase the setting in 10 ms increments if speed is unstable.	200 ms	100 to 500 ms
Poor speed precision	Slip Compensation Gain (C3-01)	• Gradually increase the setting in 0.1 ms increments if speed is too slow. • Gradually reduce the setting in 0.1 ms increments if speed is too fast.	1.0	0.5 to 1.5
Poor speed precision during regenerative operation	Slip Compensation Selection During Regeneration (C3-04)	Enable slip compensation during regeneration by setting parameter C3-04 = 1.	0	1
• Motor noise • Motor hunting and oscillation occur at speeds below 10 Hz	Carrier Frequency Selection (C6-02)	• Increase the carrier frequency if there is too much motor noise. • Reduce the carrier frequency if motor hunting and oscillation occur at low speeds. **Note:** The default setting for the carrier frequency depends on the drive capacity (o2-04) and Duty Selection (C6-01).	1 (2 kHz)	0 to max. setting

Problem	Parameter No.	Corrective Action	Default	Suggested Setting
• Poor motor torque at low speeds • Poor speed response • Motor instability at start	Mid Output Voltage A (E1-08) Minimum Output Voltage (E1-10)	• Increase the setting if motor torque and speed response are too slow. • Reduce the setting if the motor exhibits excessive instability at start-up. **Note:** When working with a relatively light load, increasing this value too much can cause overtorque.	Depends on o2-04, Drive Model Selection	Default setting ±2 V

When using OLV, leave the torque compensation gain (C4-01) at its default setting of 1.00.

◆ Fine-Tuning Closed Loop Vector Control

Table 6.3 Parameters for Fine-Tuning the Performance in CLV

Problem	Parameter No.	Corrective Action	Default	Suggested Setting
• Poor torque or speed response • Motor hunting and oscillation	ASR Proportional Gain 1 (C5-01) ASR Proportional Gain 2 (C5-03) <1>	• Gradually increase the ASR gain setting in increments of 5 if motor torque and speed response are too slow. • Reduce the setting if motor hunting and oscillation occur. • Only adjust parameter C5-03 when C5-05 > 0. • Perform ASR Auto-Tuning if possible.	20.00	10.00 to 50.00
• Poor torque or speed response • Motor hunting and oscillation	ASR Integral Time 1 (C5-02) ASR Integral Time 2 (C5-04) <1>	• Reduce the setting if motor torque and speed response are too slow. • Increase the setting if motor hunting and oscillation occur. • Only adjust parameter C5-04 when C5-05 > 0.	0.500 s	0.300 to 1.000 s
Difficulty maintaining the ASR proportional gain or the integral time at the low or high end of the speed range	ASR Gain Switching Frequency (C5-07) <1>	Switch the drive between two different ASR proportional gain and integral time settings based on the output frequency.	0.0 Hz	0.0 to max output frequency
Motor hunting and oscillation	ASR Primary Delay Time Constant (C5-06) <1>	• Gradually reduce the setting in 0.01 s increments if motor torque and speed response are too slow. • Increase the setting if the load is less rigid and subject to oscillation.	0.004 s	0.004 to 0.020 s
• Motor noise • Control motor hunting and oscillation occur at speeds below 3 Hz	Carrier Frequency Selection (C6-02)	• Increase the carrier frequency if there is too much motor noise. • Reduce the carrier frequency if motor hunting and oscillation occur at low speeds. **Note:** The default setting for the carrier frequency depends on the drive capacity (o2-04) and Drive Duty Selection (C6-01).	1	2.0 kHz to max. setting
Overshoot or undershoot when the speed changes with high inertia load	Feed Forward Control (n5-01) Inertia Tuning (T1-01 = 8)	Set parameter n5-01 to 1 to Enable Feed Forward then perform Inertia Tuning. Manually set parameters C5-17, C5-18, and n5-03 if Inertia Tuning is not possible.	0	1

<1> *Refer to C5: Automatic Speed Regulator (ASR) on page 246* for details on ASR.

◆ Fine-Tuning Open Loop Vector Control for PM Motors

Table 6.4 Parameters for Fine-Tuning Performance in OLV/PM

Problem	Parameter No.	Corrective Action	Default	Suggested Setting
Undesirable motor performance	Motor parameters (E1-□□, E5-□□)	• Check the settings for base and maximum frequency in the E1-□□ parameters. • Check E5-□□ parameters and set motor data correctly. Do not enter line-to-line data where single-phase data is required, and vice versa. • Perform Auto-Tuning.	-	-
Poor motor torque and speed response	Load Inertia (n8-55)	Adjust parameter n8-55 to meet the load inertia ratio of the machine.	0	Close to the actual load inertia ratio
	Speed Feedback Detection Control Gain (for PM Motors) (n8-45)	Increase the speed feedback detection control gain (n8-45).	0.8	Increase in increments of 0.05
	Torque Compensation Gain (C4-01)	Enable torque compensation. **Note:** Setting this value too high can cause overcompensation and motor oscillation.	0	1
Oscillation at start or the motor stalls	Acceleration/ Deceleration Pull-In Current (for PM Motors) (n8-51)	Increase the pull-in current in n8-51	50%	Increase in steps of 5%
	DC Injection Braking Current (b2-02), DC Injection Time at Start (b2-03)	Use DC Injection Braking at start to align the rotor. This may cause a short reverse rotation at start.	b2-02 = 50% b2-03 = 0.0 s	b2-03 = 0.5 s Increase b2-02 if needed
	Load Inertia (n8-55)	Increase the load inertia ratio. **Note:** Setting this value too high can cause overcompensation and motor oscillation.	0	Close to the actual load inertia ratio
Stalling or oscillation occur when load is applied during constant speed	Pull-In Current Compensation Time Constant (for PM Motors) (n8-47)	Reduce n8-47 if hunting occurs during constant speed.	5.0 s	Reduce in increments of 0.2 s
	Pull-In Current (for PM Motors) (n8-48)	Increase the pull-in current in n8-48.	30%	Increase in increments of 5%
	Load Inertia (n8-55)	Increase the load inertia ratio.	0	Close to the actual load inertia ratio
Hunting or oscillation occur	Speed Feedback Detection Control Gain (for PM Motors) (n8-47)	Reduce the speed feedback detection gain in n8-45.	0.8	Increase in increments 0.05
STo fault trips when the load is not excessively high	Motor Induction Voltage Constant 1/2 (Ke) (for PM Motors) (E5-09 or E5-24)	• Check and adjust the induced voltage constant. • Check the motor nameplate and the data sheet or contact the motor manufacturer.	Depends on drive capacity and motor code	Refer to the motor data sheet or the nameplate.
Stalling or STo occurs at high speed as the output voltage becomes saturated	Output Voltage Limit (for PM Motors) (n8-62)	Set the value of the input voltage to parameter n8-62.	200 Vac (200 V class) 400 Vac (400 V class) 575 Vac (600 V class)	Set equal to input voltage
Oscillation at constant output when U6-02 displays -10% or more.	Output Voltage Limit Proportional Gain (for PM Motors) (n8-63)	Decrease the output voltage limit proportional gain (n8-63). **Note:** The speed response will be slow if the setting is too low.	1.00	0.10 to 1.00 Decrease in decrements of 0.1

◆ Fine-Tuning Advanced Open Loop Vector Control for PM Motors

Table 6.5 Parameters for Fine-Tuning Performance in AOLV/PM

Problem	Parameter No.	Corrective Action	Default	Suggested Setting
• Poor torque or speed response • Motor hunting and oscillation	ASR Proportional Gain 1 (C5-01) ASR Proportional Gain 2 (C5-03)	• Gradually increase the setting in increments of 5 if motor torque and speed response are too slow. • Reduce the setting if motor hunting and oscillation occur. • Only adjust parameter C5-03 when C5-05 > 0.	10.00	5.00 to 30.00 <1>
• Poor torque or speed response • Motor hunting and oscillation	ASR Integral Time 1 (C5-02) ASR Integral Time 2 (C5-04)	• Reduce the setting if motor torque and speed response are too slow. • Increase the setting if motor hunting and oscillation occur. • Only adjust parameter C5-04 when C5-05 > 0.	0.500 s	0.300 to 1.000 s <1>
Difficulty maintaining the ASR proportional gain or the integral time at the low or high end of the speed range	ASR Gain Switching Frequency (C5-07)	Switch the drive between two different ASR proportional gain and integral time settings based on the output frequency.	0.0%	0.0 to Max r/min
Motor hunting and oscillation	ASR Primary Delay Time Constant (C5-06)	Increase the setting if the load is less rigid and subject to oscillation.	0.010 s	0.016 to 0.035 s <1>
Motor stalling makes normal operation impossible	Motor parameters (E1-□□, E5-□□)	Check the motor parameter settings.	-	-
Oscillation at constant output when U6-02 displays -10% or more.	Output Voltage Limit Proportional Gain (for PM Motors) (n8-63)	Decrease the output voltage limit proportional gain (n8-63). **Note:** The speed response will be slow if the setting is too low.	1.00	0.10 to 1.00 Decrease in decrements of 0.1

<1> Optimal settings will differ between no-load and loaded operation.

◆ Fine-Tuning Closed Loop Vector Control for PM Motors

Table 6.6 Parameters for Fine-Tuning Performance in CLV/PM

Problem	Parameter No.	Corrective Action	Default	Suggested Setting
• Poor torque or speed response • Motor hunting and oscillation	ASR Proportional Gain 1 (C5-01) ASR Proportional Gain 2 (C5-03)	• Gradually increase the setting in increments of 5 if motor torque and speed response are too slow. • Reduce the setting if motor hunting and oscillation occur. • Perform ASR Gain Auto-Tuning if possible	20.00	10.00 to 50.00 <1>
• Poor torque or speed response • Motor hunting and oscillation	ASR Integral Time 1 (C5-02) ASR Integral Time 2 (C5-04)	• Reduce the setting if torque and speed response are too slow. • Increase the setting if motor hunting and oscillation occur.	0.500 s	0.300 to 1.000 s <1>
Difficulty maintaining the ASR proportional gain or the integral time at the low or high end of the speed range	ASR Gain Switching Frequency (C5-07)	Switch the drive between two different ASR proportional gain and integral time settings based on the output frequency.	0.0%	0.0 to Max r/min
Motor hunting and oscillation	ASR Primary Delay Time Constant (C5-06)	Increase the setting if the load is less rigid and subject to oscillation.	0.016 s	0.004 to 0.020 s <1>
Motor stall makes normal operation impossible	Motor parameters (E1-□□, E5-□□)	Check the motor parameter settings.	-	-
Overshoot or undershoot at speed changes with high inertia load	Feed Forward Control Selection (n5-01) Inertia Auto-Tuning (T2-01 = 8)	Set parameter n5-01 to 1 to Enable Feed Forward then perform Inertia Tuning. Manually set parameters C5-17, C5-18, and n5-03 if Inertia Tuning is not possible.	0	1

Problem	Parameter No.	Corrective Action	Default	Suggested Setting
Oscillation at constant output when U6-02 displays -10% or more.	Output Voltage Limit Proportional Gain (for PM Motors) (n8-63)	Decrease the output voltage limit proportional gain (n8-63). **Note:** The speed response will be slow if the setting is too low.	1.00	0.10 to 1.00 Decrease in decrements of 0.1

<1> Optimal settings will differ between no-load and loaded operation.

◆ Parameters to Minimize Motor Hunting and Oscillation

In addition to the parameters discussed on pages *392* through *396*, parameters in *Table 6.7*indirectly affect motor hunting and oscillation.

Table 6.7 Parameters that Affect Control Performance in Applications

Name (Parameter No.)	Application
Dwell Function (b6-01 through b6-04)	Prevents motor speed loss by maintaining the output frequency when working with heavy loads or when there is powerful backlash on the machine side.
Droop Function (b7-01, b7-02)	Balances the load between two motors driving the same load when A1-02 is set to 3 or 7.
Accel/Decel Time (C1-01 through C1-11)	Adjusting accel and decel times will affect the torque presented to the motor during acceleration or deceleration.
S-Curve Characteristics (C2-01 through C2-04)	Prevents shock at the beginning and end of acceleration and deceleration.
Jump Frequency (d3-01 through d3-04)	Skips over the resonant frequencies of connected machinery.
Analog Filter Time Constant (H3-13)	Prevents fluctuation in the analog input signal due to noise.
Stall Prevention (L3-01 through L3-06, L3-11)	• Prevents motor speed loss and overvoltage when the load is too heavy or during sudden acceleration/deceleration. • Adjustment is not normally necessary because Stall Prevention is enabled as a default. Set L3-04 to 0 to disable Stall Prevention during deceleration when using a braking resistor.
Torque Limits (L7-01 through L7-04, L7-06, L7-07)	• Sets the maximum torque for OLV Control. • Ensure that the drive capacity is greater than the motor capacity when increasing this setting. Motor speed loss may occur with heavy loads.
Feed Forward Control (n5-01 through n5-03)	Increases response for acceleration/deceleration and reduces overshooting when there is low machine rigidity and ASR gain cannot be increased. Set the inertia ratio between the load and motor and the acceleration time of the motor running alone.

6.3 Drive Alarms, Faults, and Errors

◆ Types of Alarms, Faults, and Errors

Check the digital operator for information about possible faults if the drive or motor fails to operate. *Refer to Using the Digital Operator on page 155*.

If problems occur that are not covered in this manual, contact Yaskawa or a Yaskawa representative with the following information:

- Drive model
- Software version
- Date of purchase
- Description of the problem

Table 6.8 contains descriptions of the various types of alarms, faults, and errors that may occur while operating the drive.

Table 6.8 Types of Alarms, Faults, and Errors

Type	Drive Response
Faults	When the drive detects a fault: • The digital operator displays text indicating the specific fault and the ALM indicator LED remains lit until the fault is reset. • The fault interrupts drive output and the motor coasts to a stop. • Some faults allow the user to select the stopping method when the fault occurs. • Fault output terminals MA-MC will close, and MB-MC will open. The drive will remain inoperable until the fault is cleared. *Refer to Fault Reset Methods on page 448*.
Minor Faults and Alarms	When the drive detects an alarm or a minor fault: • The digital operator displays text indicating the specific alarm or minor fault, and the ALM indicator LED flashes. • The drive continues running the motor, although some alarms allow the user to select a stopping method when the alarm occurs. • A multi-function contact output set to be tripped by a minor fault (H2- □□ = 10) closes. If the output is set to be tripped by an alarm, the contact will not close. • The digital operator displays text indicating a specific alarm and the ALM indicator LED flashes. Remove the cause of the problem to reset a minor fault or alarm.
Operation Errors	An operation error occurs when parameter settings conflict or do not match hardware settings (such as with an option card). When the drive detects an operation error: • The digital operator displays text indicating the specific error. • Multi-function contact outputs do not operate. The drive will not operate the motor until the error has been reset. Correct the settings that caused the operation error to clear the error.
Tuning Errors	Tuning errors occur while performing Auto-Tuning. When the drive detects a tuning error: • The digital operator displays text indicating the specific error. • Multi-function contact outputs do not operate. • Motor coasts to stop. Remove the cause of the error and repeat the Auto-Tuning process.
Copy Function Errors	Copy Function Errors occur when using the digital operator or the USB Copy Unit to copy, read, or verify parameter settings. • The digital operator displays text indicating the specific error. • Multi-function contact outputs do not operate. Pressing any key on the digital operator will clear the fault. Investigate the cause of the problem (such as model incompatibility) and try again.

◆ Alarm and Error Displays

■ Faults

Table 6.9 gives an overview of possible fault codes. Conditions such as overvoltages can trip faults and alarms. It is important to distinguish between faults and alarms to determine the proper corrective actions.

When the drive detects a fault, the ALM indicator LED lights, the fault code appears on the digital operator, and the fault contact MA-MB-MC triggers. An alarm is present if the ALM LED blinks and the fault code on the digital operator flashes. *Refer to Minor Faults and Alarms on page 402* for a list of alarm codes.

Table 6.9 Fault Displays

Digital Operator Display		Name	Page
boL	boL	Braking Transistor Overload Fault	404
bUS	bUS	Option Communication Error	404
CE	CE	MEMOBUS/Modbus Communication Error	404
CF	CF	Control Fault	405
CoF	CoF	Current Offset Fault	405
CPF00, CPF01 <1>	CPF11 to CPF14	Control Circuit Error	405
	CPF16 to CPF19	Control Circuit Error	405
CPF02	CPF02	A/D Conversion Error	405
CPF03	CPF03	Control Board Connection Error	405
CPF06 <1>	CPF06	EEPROM Memory Data Error	406
CPF07, CPF08	CPF07, CPF08	Terminal Board Connection Error	406
CPF11	CPF11	RAM Fault	406
CPF12	CPF12	FLASH Memory Fault	406
CPF13	CPF13	Watchdog Circuit Exception	406
CPF14	CPF14	Control Circuit Fault	406
CPF16	CPF16	Clock Fault	406
CPF17	CPF17	Timing Fault	406
CPF18	CPF18	Control Circuit Fault	406
CPF19	CPF19	Control Circuit Fault	407
CPF20, CPF21 <2>	CPF20, CPF21	Control Circuit Error	407
CPF22	CPF22	Hybrid IC Error	407
CPF23	CPF23	Control Board Connection Error	407
CPF24	CPF24	Drive Unit Signal Fault	407
CPF25	CPF25	Terminal Board Not Connected	407
CPF26 to CPF35, CPF40 to CPF45 <3>	CPF26 to CPF35, CPF40 to CPF45	Control Circuit Error	407
dEv	dEv	Speed Deviation (for Control Mode with PG and OLV/PM without PG)	407
dv1	dv1	Z Pulse Fault	408
dv2	dv2	Z Pulse Noise Fault Detection	408
dv3	dv3	Inversion Detection	408
dv4	dv4	Inversion Prevention Detection	408
dv7	dv7	Initial Polarity Estimation Timeout	408

Digital Operator Display		Name	Page
dWFL	dWFL	DriveWorksEZ Fault	409
dWF1 <4>	dWF1	EEPROM Memory DriveWorksEZ Data Error	409
E5	E5	MECHATROLINK Watchdog Timer Error	409
EF0	EF0	Option Card External Fault	409
EF1 to EF8	EF1 to EF8	External Fault (input terminal S1 to S8)	410
Err	Err	EEPROM Write Error	410
FAn	FAn	Internal Fan Fault	410
FbH	FbH	Excessive PID Feedback	411
FbL	FbL	PID Feedback Loss	411
GF	GF	Ground Fault	411
LF	LF	Output Phase Loss	411
LF2	LF2	Current Imbalance	412
LF3 <3>	LF3	Power Unit Output Phase Loss 3	412
LSo <5>	LSo	LSo Fault	412
nSE	nSE	Node Setup Error	412
oC	oC	Overcurrent	413
oFA00 <6>	oFA00	Option Card Connection Error at Option Port CN5-A	413
oFA01	oFA01	Option Card Fault at Option Port CN5-A	414
oFA03 to oFA06	oFA03 to oFA06	Option Card Error Occurred at Option Port CN5-A	414
oFA10, oFA11	oFA10, oFA11	Option Card Error (CN5-A)	414
oFA12 to oFA17	oFA12 to oFA17	Option Card Connection Error (CN5-A)	414
oFA30 to oFA43	oFA30 to oFA43	Comm Option Card Connection Error (CN5-A)	414
oFb00 <6>	oFb00	Option Card Fault at Option Port CN5-B	414
oFb01	oFb01	Option Card Fault at Option Port CN5-B	414
oFb02	oFb02	Option Card Fault at Option Port CN5-B	414
oFb03, oFb11	oFb03, oFb11	Option card error occurred at Option Port CN5-B	414
oFb12 to oFb17	oFb12 to oFb17	Option card error occurred at Option Port CN5-B	414

Digital Operator Display		Name	Page
oFC00 <6>	oFC00	Option Card Connection Error at Option Port CN5-C	415
oFC01	oFC01	Option Card Fault at Option Port CN5-C	415
oFC02	oFC02	Option Card Fault at Option Port CN5-C	415
oFC03, oFC11	oFC03, oFC11	Option Card Error Occurred at Option Port CN5-C	415
oFC12 to oFC17	oFC12 to oFC17	Option Card Error Occurred at Option Port CN5-C	415
oFC50 to oFC55	oFC50 to oFC55	Option Card Error Occurred at Option Port CN5-C	415
oH	oH	Heatsink Overheat	415
oH1	oH1	Overheat 1 (Heatsink Overheat)	416
oH3	oH3	Motor Overheat Alarm (PTC input)	416
oH4	oH4	Motor Overheat Fault (PTC input)	416
oH5 <3>	oH5	Motor Overheat (NTC Input)	416
oL1	oL1	Motor Overload	417
oL2	oL2	Drive Overload	417
oL3	oL3	Overtorque Detection 1	418
oL4	oL4	Overtorque Detection 2	418
oL5	oL5	Mechanical Weakening Detection 1	418
oL7	oL7	High Slip Braking oL	418
oPr	oPr	External Digital Operator Connection Fault	418
oS	oS	Overspeed	418
ov	ov	Overvoltage	419
PF	PF	Input Phase Loss	420

Digital Operator Display		Name	Page
PGo	PGo	PG Disconnect (for Control Mode with PG)	420
PGoH	PGoH	PG Hardware Fault (when using PG-X3)	420
rF	rF	Braking Resistor Fault	420
rH	rH	Braking Resistor Overheat	421
rr	rr	Dynamic Braking Transistor	421
SC	SC	Output Short Circuit or IGBT Fault	421
SEr	SEr	Too Many Speed Search Restarts	421
STo	STo	Pull-Out Detection	422
SvE	SvE	Zero Servo Fault	422
THo <3>	THo	Thermistor Disconnect	422
UL3	UL3	Undertorque Detection 1	422
UL4	UL4	Undertorque Detection 2	422
UL5	UL5	Mechanical Weakening Detection 2	423
UnbC <3>	UnbC	Current Unbalance	423
Uv1 <3> <6>	Uv1	DC Bus Undervoltage	423
Uv2 <6>	Uv2	Control Power Supply Voltage Fault	423
Uv3 <6>	Uv3	Undervoltage 3 (Soft-Charge Bypass Circuit Fault)	424
Uv4 <3>	Uv4	Gate Drive Board Undervoltage	424
voF	voF	Output Voltage Detection Fault	424

<1> Displayed as CPF00 when occurring at drive power up. When one of the faults occurs after successfully starting the drive, the display will show CPF01.

<2> Displayed as CPF20 when occurring at drive power up. When one of the faults occurs after successfully starting the drive, the display will show CPF21.

<3> Detected in models 4A0930 and 4A1200.

<4> Available in drive software versions PRG: 1018 and later.

<5> This function prevents continuous operation in reverse when using high frequency injection (n8-57 = 1) in AOLV/PM (A1-02 = 6) with a motor for which no motor code has been entered (it does not only prevent reverse operation). Set L8-93, L8-94, and L8-95 to low values within range of erroneous detection to quickly detect undesirable reverse operation.

<6> Fault histories are not kept when CPF00, CPF01, CPF06, CPF24, oFA00, oFb00, oFC00, Uv1, Uv2, or Uv3 occur.

■ Minor Faults and Alarms

Refer to *Table 6.10* for an overview of possible alarm codes. Conditions such as overvoltages can trip faults and alarms. It is important to distinguish between faults and alarms to determine the proper corrective actions.

When the drive detects an alarm, the ALM indicator LED blinks and the alarm code display flashes. Most alarms trigger a digital output programmed for alarm output (H2-□□ = 10). A fault (not an alarm) is present if the ALM LED lights without blinking. *Refer to Faults on page 400* for information on fault codes.

Table 6.10 Minor Fault and Alarm Displays

Digital Operator Display		Name	Minor Fault Output (H2-□□ = 10)	Page
AEr	AEr	Station Address Setting Error (CC-Link, CANopen, MECHATROLINK)	YES	425
bb	bb	Baseblock	No output <2>	425
boL	boL	Braking Transistor Overload Fault	YES	425
bUS	bUS	Option Card Communications Error	YES	425
CALL	CALL	Serial Communication Transmission Error	YES	426
CE	CE	MEMOBUS/Modbus Communication Error	YES	426
CrST	CrST	Cannot Reset	YES	426
CyC	CyC	MECHATROLINK Comm. Cycle Setting Error	YES	426
dEv	dEv	Excessive Speed Deviation (for Control Mode with PG)	YES	427
dnE	dnE	Drive Disabled	YES	427
dWAL	dWAL	DriveWorksEZ Fault	YES	409
E5	E5	MECHATROLINK Watchdog Timer Error	YES	409
EF	EF	Forward/Reverse Run Command Input Error	YES	427
EF0	EF0	Option Card External Fault	YES	427
EF1 to EF8	EF1 to EF8	External Fault (input terminal S1 to S8)	YES	427
FAn	FAn	Internal Fan Fault	YES	410
FbH	FbH	Excessive PID Feedback	YES	428
FbL	FbL	PID Feedback Loss	YES	428
Hbb	Hbb	Safe Disable Signal Input	YES	428
HbbF	HbbF	Safe Disable Signal Input	YES	429
HCA	HCA	Current Alarm	YES	429
LT-1	LT-1	Cooling Fan Maintenance Time	No output <1>	429
LT-2	LT-2	Capacitor Maintenance Time	No output <1>	429
LT-3	LT-3	Soft Charge Bypass Relay Maintenance Time	No output <1>	429
LT-4	LT-4	IGBT Maintenance Time (50%)	No output <1>	430
oH	oH	Heatsink Overheat	YES	430
oH2	oH2	Drive Overheat Warning	YES	430
oH3	oH3	Motor Overheat	YES	430
oH5 <3>	oH5	Motor Overheat	YES	430
oL3	oL3	Overtorque 1	YES	431
oL4	oL4	Overtorque 2	YES	431
oL5	oL5	Mechanical Weakening Detection 1	YES	431
oS	oS	Overspeed	YES	431
ov	ov	DC Bus Overvoltage	YES	431
PASS	PASS	MEMOBUS/Modbus Test Mode Complete	No output	432
PGo	PGo	PG Disconnect (for Control Mode with PG)	YES	432
PGoH	PGoH	PG Hardware Fault (when using PG-X3)	YES	432
rUn	rUn	Motor Switch during Run	YES	432
SE	SE	MEMOBUS/Modbus Test Mode Fault	YES	432
THo <3>	THo	Thermistor Disconnect	YES	432
TrPC	TrPC	IGBT Maintenance Time (90%)	YES	433
UL3	UL3	Undertorque Detection 1	YES	433
UL4	UL4	Undertorque Detection 2	YES	433
UL5	UL5	Mechanical Weakening Detection 2	YES	423
Uv	Uv	Undervoltage	YES	433
voF	voF	Output Voltage Detection Fault	YES	433

<1> Output when H2-□□ = 2F.

<2> Baseblock alarm “bb” will not activate a digital output programmed for minor fault H2-0□= 10. Set H2-0□ = 8 or 1B to activate a digital otuput for “bb”.

<3> Detected in models 4A0930 and 4A1200.

Operation Errors

Table 6.11 Operation Error Displays

Digital Operator Display		Name	Page
oPE01	oPE01	Drive Capacity Setting Fault	434
oPE02	oPE02	Parameter Setting Range Error	434
oPE03	oPE03	Multi-Function Input Selection Error	434
oPE04	oPE04	Initialization Required	435
oPE05	oPE05	Initialization Required	435
oPE06	oPE06	Control Method Selection Error	435
oPE07	oPE07	Multi-Function Analog Input Selection Error	436
oPE08	oPE08	Parameter Selection Error	436
oPE09	oPE09	PID Control Selection Fault	436
oPE10	oPE10	V/f Data Setting Error	437
oPE11	oPE11	Carrier Frequency Setting Error	437
oPE13	oPE13	Pulse Monitor Selection Error	437
oPE15	oPE15	Torque Control Setting Error	437
oPE16	oPE16	Energy Saving Constants Error	437
oPE18	oPE18	Online Tuning Parameter Setting Error	437
oPE20	oPE20 <1>	PG-F3 Setting Error	438

<1> Available in drive software versions PRG: 1018 and later.

Auto-Tuning Errors

Table 6.12 Auto-Tuning Error Displays

Digital Operator Display		Name	Page
End1	End1	Excessive V/f Setting	439
End2	End2	Motor Iron-Core Saturation Coefficient	439
End3	End3	Rated Current Setting Alarm	439
End4	End4	Adjusted Slip Calculation Error	439
End5	End5	Resistance Tuning Error	439
End6	End6	Leakage Inductance Alarm	439
End7	End7	No-Load Current Alarm	440
Er-01	Er-01	Motor Data Error	440
Er-02	Er-02	Minor Fault	440
Er-03	Er-03	STOP Button Input	440
Er-04	Er-04	Line-to-Line Resistance Error	440
Er-05	Er-05	No-Load Current Error	441
Er-08	Er-08	Rated Slip Error	441
Er-09	Er-09	Acceleration Error	441
Er-10	Er-10	Motor Direction Error	441
Er-11	Er-11	Motor Speed Error	441
Er-12	Er-12	Current Detection Error	442
Er-13	Er-13	Leakage Inductance Error	443
Er-14	Er-14	Motor Speed Error 2	443
Er-15	Er-15	Torque Saturation Error	443
Er-16	Er-16	Inertia ID Error	443
Er-17	Er-17	Reverse Prohibited Error	443
Er-18	Er-18	Induction Voltage Error	443
Er-19	Er-19	PM Inductance Error	443
Er-20	Er-20	Stator Resistance Error	443
Er-21	Er-21	Z Pulse Correction Error	444
Er-25	Er-25 <1>	High Frequency Injection Parameter Tuning Error	444

<1> Available in drive software versions PRG: 1018 and later.

Errors and Displays When Using the Copy Function

Table 6.13 Copy Errors

Digital Operator Display		Name	Page
CoPy	CoPy	Writing Parameter Settings (flashing)	445
CPEr	CPEr	Control Mode Mismatch	445
CPyE	CPyE	Error Writing Data	445
CSEr	CSEr	Copy Unit Error	445
dFPS	dFPS	Drive Model Mismatch	445
End	End	Task Complete	445
iFEr	iFEr	Communication Error	445
ndAT	ndAT	Model, Voltage Class, Capacity Mismatch	446
rdEr	rdEr	Error Reading Data	446
rEAd	rEAd	Reading Parameter Settings (Flashing)	446
vAEr	vAEr	Voltage Class, Capacity Mismatch	446
vFyE	vFyE	Parameter settings in the drive and those saved to the copy function are not the same	446
vrFy	vrFy	Comparing Parameter Settings (Flashing)	446

6.4 Fault Detection

◆ Fault Displays, Causes, and Possible Solutions

Faults are detected for drive protection, and cause the drive to stop while toggling the form-C output associated with terminals MA-MB-MC. Remove the cause of the fault and manually clear the fault before attempting to run the drive again.

Table 6.14 Detailed Fault Displays, Causes, and Possible Solutions

Digital Operator Display		Fault Name
boL	boL	Braking Transistor Overload Fault The braking transistor reached its overload level.
Cause		**Possible Solution**
The wrong braking resistor is installed		Select the correct braking resistor.
Use a regen converter, regen unit, braking unit, or other device to connect the +1 or +3 terminal to the - terminal.		Set L8-55 to 0 to disable Internal Braking Transistor Protection.
The braking transistor use rate is high (i.e., the regen converter is large or the repetition frequency is high).		• Change to a CDBR type braking unit. • Change to a regen converter. • Increase the deceleration time.
The braking transistor inside the drive is faulty.		Replace the drive.

Digital Operator Display		Fault Name
bUS	bUS	Option Communication Error • The connection was lost after establishing initial communication. • Only detected when the run command frequency reference is assigned to an option card.
Cause		**Possible Solution**
No signal was received from the PLC		• Check for faulty wiring. • Correct the wiring. • Check for disconnected cables and short circuits and repair as needed.
Faulty communications wiring or an existing short circuit		
Communication data error occurred due to noise		• Check the various options available to minimize the effects of noise. • Counteract noise in the control circuit, main circuit, and ground wiring. • Ensure that other equipment such as switches or relays do not cause noise. Use surge absorbers if necessary. • Use only recommended cables or other shielded line. Ground the shield on the controller side or the drive input power side. • Separate all communication wiring from drive power lines. Install an EMC noise filter to the drive power supply input.
The option card is damaged		Replace the option card if there are no problems with the wiring and the error continues to occur.
The option card is not properly connected to the drive		• The connector pins on the option card do not line up properly with the connector pins on the drive. • Reinstall the option card.

Digital Operator Display		Fault Name
CE	CE	MEMOBUS/Modbus Communication Error Control data was not received for the CE detection time set to H5-09.
Cause		**Possible Solution**
Faulty communications wiring or an existing short circuit		• Check for faulty wiring. • Correct the wiring. • Check for disconnected cables and short circuits and repair as needed.
Communication data error occurred due to noise		• Check the various options available to minimize the effects of noise. • Counteract noise in the control circuit, main circuit, and ground wiring. • Use only recommended cables or other shielded line. Ground the shield on the controller side or the drive input power side. • Ensure that other equipment such as switches or relays do not cause noise. Use surge suppressors if required. • Separate all communication wiring from drive power lines. Install an EMC noise filter to the drive power supply input.

Digital Operator Display		Fault Name
CF	CF	Control Fault
		The torque limit was reached continuously for three seconds after the Stop command was input and deceleration was not possible in OLV Control.
Cause		**Possible Solution**
Motor parameters are set improperly		Check the motor parameter settings and repeat Auto-Tuning.
Torque limit is too low		Set the torque limit to the most appropriate setting (L7-01 through L7-04).
Load inertia is too big		• Adjust the deceleration time (C1-02, C1-04, C1-06, C1-08). • Set the frequency to the minimum value and interrupt the Run command when the drive finishes decelerating.

Digital Operator Display		Fault Name
CoF	CoF	Current Offset Fault
		Drive starts operation while the current-detection circuit failure, or the induced voltage remains in the motor (coasting and after rapid deceleration).
Cause		**Possible Solution**
The drive performed a current offset adjustment while the motor was rotating		• The set value exceeds the allowable setting range while the drive automatically adjusts the current offset. This happens when attempting to restart a PM motor that is coasting to stop. • Set b3-01 to 1 to enable Speed Search at Start. • Perform Speed Search 1 or 2 (H1-□□ = 61 or 62) via one of the external terminals. **Note:** Speed Searches 1 and 2 are the same when using OLV/PM.
Hardware problem		If the problem continues, replace the control board or the entire drive. Contact Yaskawa or a Yaskawa representative for instructions on replacing the control board.

Digital Operator Display		Fault Name
CPF00 or CPF01	CPF11 to CPF14 CPF16 to CPF19	Control Circuit Error
Cause		**Possible Solution**
There is a self-diagnostic error in the control circuit		• Cycle power to the drive. • If the problem continues, replace the control board or the entire drive. Contact Yaskawa or a Yaskawa representative for instructions on replacing the control board.
Connector on the operator is damaged		Replace the operator.

Digital Operator Display		Fault Name
CPF02	CPF02	A/D Conversion Error
		An A/D conversion error or control circuit error occurred.
Cause		**Possible Solution**
Control circuit is damaged		• Cycle power to the drive. • If the problem continues, replace the control board or the entire drive. Contact Yaskawa or a Yaskawa representative for instructions on replacing the control board.

Digital Operator Display		Fault Name
CPF03	CPF03	Control Board Connection Error
		Connection error between the control board and the drive
Cause		**Possible Solution**
There is a connection error		• Turn off the power and check the connection between the control board and the drive. • If the problem continues, replace the control board or the entire drive. Contact Yaskawa or a Yaskawa representative for instructions on replacing the control board.
Drive fails to operate properly due to electrical signal interference		• Check the various options available to minimize the effects of noise. • Counteract noise in the control circuit, main circuit, and ground wiring. • Use only recommended cables or other shielded line. Ground the shield on the controller side or the drive input power side. • Ensure that other equipment such as switches or relays do not cause noise. Use surge suppressors if required. • Separate all communication wiring from drive power lines. Install an EMC noise filter to the drive power supply input.

Digital Operator Display		Fault Name
CPF06	CPF06	EEPROM Memory Data Error
		Error in the data saved to EEPROM
Cause		**Possible Solution**
There is an error in EEPROM control circuit		• Turn off the power and check the connection between the control board and the drive. • If the problem continues, replace the control board or the entire drive. Contact Yaskawa or a Yaskawa representative for instructions on replacing the control board.
The power supply was switched off while parameters were being saved to the drive		Reinitialize the drive (A1-03 = 2220, 3330).

Digital Operator Display		Fault Name
CPF07	CPF07	Terminal Board Connection Error
CPF08	CPF08	
Cause		**Possible Solution**
There is a faulty connection between the terminal board and the control board		• Turn off the power and reconnect the terminal board. • If the problem continues, replace the control board or the entire drive. Contact Yaskawa or a Yaskawa representative for instructions on replacing the control board.

Digital Operator Display		Fault Name
CPF11	CPF11	RAM Fault
Cause		**Possible Solution**
Hardware is damaged.		Replace the drive.

Digital Operator Display		Fault Name
CPF12	CPF12	FLASH Memory Fault
		Problem with the ROM (FLASH memory)
Cause		**Possible Solution**
Hardware is damaged.		Replace the drive.

Digital Operator Display		Fault Name
CPF13	CPF13	Watchdog Circuit Exception
		Self-diagnostics problem.
Cause		**Possible Solution**
Hardware is damaged.		Replace the drive.

Digital Operator Display		Fault Name
CPF14	CPF14	Control Circuit Fault
		CPU error (CPU operates incorrectly due to interference, etc.)
Cause		**Possible Solution**
Hardware is damaged.		Replace the drive.

Digital Operator Display		Fault Name
CPF16	CPF16	Clock Fault
		Standard clock error.
Cause		**Possible Solution**
Hardware is damaged.		Replace the drive.

Digital Operator Display		Fault Name
CPF17	CPF17	Timing Fault
		A timing error occurred during an internal process.
Cause		**Possible Solution**
Hardware is damaged.		Replace the drive.

Digital Operator Display		Fault Name
CPF18	CPF18	Control Circuit Fault
		CPU error. Non-Maskable Interrupt (An unusual interrupt was triggered by interference, etc.)

Digital Operator Display	Fault Name
Cause	**Possible Solution**
Hardware is damaged.	Replace the drive.

Digital Operator Display		Fault Name
CPF 19	CPF19	Control Circuit Fault
		CPU error (Manual reset due to interference, etc.)
Cause		**Possible Solution**
Hardware is damaged.		Replace the drive.

Digital Operator Display		Fault Name
CPF20 or CPF21	CPF20 or CPF21	Control Circuit Error
Cause		**Possible Solution**
Hardware is damaged		• Cycle power to the drive. • If the problem continues, replace the control board or the entire drive. Contact Yaskawa or a Yaskawa representative for instructions on replacing the control board.

Digital Operator Display		Fault Name
CPF22	CPF22	Hybrid IC Failure
Cause		**Possible Solution**
Hybrid IC failure on the power board		• Cycle power to the drive. • If the problem continues, replace the power board or the entire drive. Contact Yaskawa or a Yaskawa representative for instructions on replacing the power board.

Digital Operator Display		Fault Name
CPF23	CPF23	Control Board Connection Error
		Connection error between the control board and the drive
Cause		**Possible Solution**
Hardware is damaged		• Turn off the power and check the connection between the control board and the drive. • If the problem continues, replace the control board or the entire drive. Contact Yaskawa or a Yaskawa representative for instructions on replacing the control board.

Digital Operator Display		Fault Name
CPF24	CPF24	Drive Unit Signal Fault
		The drive capacity cannot be detected correctly (drive capacity is checked when the drive is powered up).
Cause		**Possible Solution**
Hardware is damaged		If the problem continues, replace the control board or the entire drive. Contact Yaskawa or a Yaskawa representative for instructions on replacing the control board.

Digital Operator Display		Fault Name
CPF25	CPF25	Terminal Board Not Connected
Cause		**Possible Solution**
Terminal board is not connected correctly		Reconnect the terminal board to the connector on the drive, then cycle the power to the drive.

Digital Operator Display		Fault Name
CPF26 to CPF35 CPF40 to CPF45	CPF26 to CPF35 CPF40 to CPF45	Control Circuit Error
		CPU error
Cause		**Possible Solution**
Hardware is damaged		• Cycle power to the drive. • If the problem continues, replace the control board or the entire drive. Contact Yaskawa or a Yaskawa representative for instructions on replacing the control board.

Digital Operator Display		Fault Name
dEv	dEv	Speed Deviation (for Control Mode with PG and AOLV/PM without PG)
		The deviation between the speed reference and speed feedback is greater than the setting in F1-10 for longer than the time set to F1-11.

Digital Operator Display	Fault Name
Cause	**Possible Solution**
Load is too heavy	Reduce the load.
Acceleration and deceleration times are set too short	Increase the acceleration and deceleration times (C1-01 through C1-08).
The load is locked up	Check the machine.
Parameters are not set appropriately	Check the settings of parameters F1-10 and F1-11.
Incorrect speed feedback scaling when using terminal RP as speed feedback input in V/f control	• Set H6-02 to the same value as the speed feedback signal frequency when the motor runs at maximum speed. • Adjust the speed feedback signal using parameters H6-03 through H6-05. • Make sure the speed feedback signal frequency does not exceed the maximum input frequency of terminal RP.
Motor brake is engaged	Ensure the motor brake releases properly.

Digital Operator Display		Fault Name
du1	dv1	Z Pulse Fault (CLV/PM control mode only)
		The motor turned one full rotation without the Z Pulse being detected.
Cause		**Possible Solution**
PG encoder is disconnected, improperly wired, or the PG option card or PG encoder are damaged		• Make sure the PG encoder is properly connected and all shielded lines are properly grounded. • If the problem continues after cycling power, replace the PG option card or the PG encoder.

Digital Operator Display		Fault Name
du2	dv2	Z Pulse Noise Fault Detection (CLV/PM control mode only)
		The Z Pulse is out of phase by more than 5 degrees for 10 consecutive revolutions.
Cause		**Possible Solution**
Noise interference along the PG cable		Separate the PG cable lines from the source of the noise.
PG cable is not wired properly		Rewire the PG encoder and properly ground all shielded lines.
PG option card or the PG encoder are damaged		If the problem continues after cycling power, replace the PG option card or the PG encoder.

Digital Operator Display		Fault Name
du3	dv3	Inversion Detection (CLV/PM control mode only)
		The torque reference and acceleration are in opposite directions and the speed reference and actual motor speed differ by more than 30% for the number of times set to F1-18.
Cause		**Possible Solution**
The Z Pulse offset is not set properly to E5-11		Set the value for Δθ to E5-11 as specified on the motor nameplate. Replacing the PG encoder or changing the application to rotate the motor in reverse requires readjustment of the Z-pulse offset. (T2-01 = 3)
An external force on the load side caused the motor to move		• Make sure the motor is rotating in the proper direction. • Identify and fix any problems on the load side causing the motor to rotate in the opposite direction.
Noise interference along the PG cable affecting the A or B pulse		Properly rewire the PG encoder and connect all lines including shielded line.
PG encoder is disconnected, improperly wired, or the PG option card or PG encoder are damaged		
Rotational direction for the PG encoder set to F1-05 is the opposite of the motor line order		Properly connect the motor lines for each phase (U, V, W).
The drive incorrectly detected the position of the motor poles.		If the value displayed in the U6–57 is lower than 819, then set the polarity judge current (n8–84) higher than the default value.

Digital Operator Display		Fault Name
du4	dv4	Inversion Prevention Detection (CLV/PM control mode only)
		Pulses indicate that the motor is rotating in the opposite direction of the speed reference. Set the number of pulses to trigger inverse detection to F1-19. **Note:** Set F1-19 to 0 to disable inverse detection in applications where the motor may rotate in the opposite direction of the speed reference.
Cause		**Possible Solution**

Digital Operator Display	Fault Name
The Z Pulse offset is not set properly to E5-11	• Set the value for Δθ to E5-11 as specified on the motor nameplate. • If the problem continues after cycling power, replace the PG option card or the PG encoder. Replacing the PG encoder or changing the application to rotate the motor in reverse requires readjustment of the Z-pulse offset. (T2-01 = 3)
Electrical signal interference along the PG cable affecting the A or B pulse	• Make sure the motor is rotating in the proper direction. • Identify and fix any problems on the load side causing the motor to rotate in the opposite direction.
PG encoder is disconnected, improperly wired, or the PG option card or PG encoder are damaged	• Rewire the PG encoder and properly connect all lines including shielded line. • If the problem continues after cycling power, replace the PG option card or the PG encoder.
The drive incorrectly detected the position of the motor poles.	If the value displayed in the U6–57 is lower than 819, then set the polarity judge current (n8–84) higher than the default value.
The setting value of the polarity judge current (n8–84) is too low.	The polarity judge current (n8–84) is higher that default value. Check with the motor manufacturer for the maximum set value.

Digital Operator Display		Fault Name
dv7 <1>	dv7	Initial Polarity Estimation Timeout
Cause		**Possible Solution**
Disconnection in the motor coil winding		• Measure the motor line-to-line resistance and replace the motor if the motor coil winding is open.
Loose output terminals		• Check for loose terminals. Apply the tightening torque specified in this manual to fasten the terminals. ***Refer to Main Circuit Wire Gauges and Tightening Torques on page 129*** for details. • Ensure that monitor U6-57 displays a value greater than 819 during the initial test runs for the application to prevent the drive from incorrectly determining motor polarity. If U6-57 shows a value less than 819, increase the polarity judge current level set in parameter n8-84.

<1> Available in drive software versions PRG: 1015 and later.

Digital Operator Display		Fault Name
dWAL	dWAL	DriveWorksEZ Fault
dWFL	dWFL	
Cause		**Possible Solution**
Fault output by DriveWorksEZ		Correct the cause of the fault.

Digital Operator Display		Fault Name
dWF1	dWF1	EEPROM Memory DriveWorksEZ Data Error
		There is an error in the DriveWorksEZ program saved to EEPROM.
Cause		**Possible Solution**
Problem with EEPROM data.		Reinitialize the drive (A1-03 = 2220, 3330) and download the DriveWorksEZ program again.
There is an error in the EEPROM control circuit.		• Turn the power off and check the connection between the control board and the drive. • If the problem continues, replace either the control board or the entire drive and then download the DriveWorksEZ program. For instructions on replacing the control board, contact Yaskawa or your nearest sales representative.

Digital Operator Display		Fault Name
E5	E5	MECHATROLINK Watchdog Timer Error
		The watchdog timed out.
Cause		**Possible Solution**
Data has not been received from the PLC		Execute DISCONNECT or ALM_CLR, then issue a CONNECT command or SYNC_SET command and proceed to phase 3. Refer to the SI-T3 Option Technical Manual for more details on troubleshooting.

Digital Operator Display		Fault Name
EF0	EF0	Option Card External Fault
		An external fault condition is present.
Cause		**Possible Solution**
An external fault was received from the PLC and F6-03 is set to a value other than 3.		• Remove the cause of the external fault. • Remove the external fault input from the PLC.
Problem with the PLC program		Check the PLC program and correct problems.

Digital Operator Display		Fault Name
EF1	EF1	External Fault (input terminal S1)
		External fault at multi-function input terminal S1.
EF2	EF2	External Fault (input terminal S2)
		External fault at multi-function input terminal S2.
EF3	EF3	External Fault (input terminal S3)
		External fault at multi-function input terminal S3.
EF4	EF4	External Fault (input terminal S4)
		External fault at multi-function input terminal S4.
EF5	EF5	External Fault (input terminal S5)
		External fault at multi-function input terminal S5.
EF6	EF6	External Fault (input terminal S6)
		External fault at multi-function input terminal S6.
EF7	EF7	External Fault (input terminal S7)
		External fault at multi-function input terminal S7.
EF8	EF8	External Fault (input terminal S8)
		External fault at multi-function input terminal S8.
Cause		**Possible Solution**
An external device tripped an alarm function		Remove the cause of the external fault and reset the fault.
Wiring is incorrect		• Properly connect the signal lines to the terminals assigned for external fault detection (H1-□□ = 20 to 2B). • Reconnect the signal line.
Multi-function contact input setting is incorrect		• Check for unused terminals set for H1-□□ = 20 to 2B (External Fault). • Change the terminal settings.

Digital Operator Display		Fault Name
Err	Err	EEPROM Write Error
		Data cannot be written to the EEPROM
Cause		**Possible Solution**
Noise has corrupted data while writing to the EEPROM		• Press “ENTER” on the digital operator. • Correct the parameter setting. • Cycle power to the drive. • If the problem continues, replace the control board or the entire drive. Contact Yaskawa or a Yaskawa representative for instructions on replacing the control board.
Hardware problem		If the problem continues, replace the control board or the entire drive. Contact Yaskawa or a Yaskawa representative for instructions on replacing the control board.

Digital Operator Display		Fault Name
FAn	FAn	Internal Fan Fault
		Fan or magnetic contactor failure (detected when L8-32 = 0 to 2)
Cause		**Possible Solution**
Internal cooling fan has malfunctioned		• Cycle power to the drive. • Check for fan operation. • Verify the cumulative operation time of the fan with monitor U4-03, and verify the cumulative operation time of the fan maintenance timer with U4-04. • If the cooling fan has exceeded its expected performance life or is damaged in any other way, replace the fan.
Fault detected in the internal cooling fan or magnetic contactor to the power supply.		• Cycle power to the drive. • If the fault continues to occur, replace the power board/gate drive board or the entire drive. • Contact Yaskawa or a Yaskawa representative for instructions on replacing the power board/gate drive board.

Digital Operator Display		Fault Name
FbH	FbH	Excessive PID Feedback
		PID feedback input is greater than the level set to b5-36 for longer than the time set to b5-37. Set b5-12 to 2 or 5 to enable fault detection.
Cause		**Possible Solution**
Parameters are set inappropriately		Check b5-36 and b5-37 settings.
Incorrect PID feedback wiring		Correct the wiring.
There is a problem with the feedback sensor		• Check the sensor on the control side. • Replace the sensor if damaged.

Digital Operator Display		Fault Name
FbL	FbL	PID Feedback Loss
		PID feedback loss detection is programmed to trigger a fault (b5-12 = 2 or 5) and the PID feedback level is below the detection level set to b5-13 for longer than the time set to b5-14.
Cause		**Possible Solution**
Parameters are set inappropriately		Check b5-13 and b5-14 settings.
Incorrect PID feedback wiring		Correct the wiring.
There is a problem with the feedback sensor		• Check the sensor on the control side. • Replace the sensor if damaged.

Digital Operator Display		Fault Name
GF	GF	Ground Fault
		• A current short to ground exceeded 50% of rated current on the output side of the drive. • Setting L8-09 to 1 enables ground fault detection.
Cause		**Possible Solution**
Motor insulation is damaged		• Check the insulation resistance of the motor. • Replace the motor.
A damaged motor cable is creating a short circuit		• Check the motor cable. • Remove the short circuit and reapply power to the drive
		• Check the resistance between the cable and the ground terminal ⏚. • Replace the cable.
Excessive leakage current at the drive output		• Reduce the carrier frequency. • Reduce the amount of stray capacitance.
The drive performed a current offset adjustment while the motor was rotating		• The set value exceeds the allowable setting range while the drive automatically adjusts the current offset. This generally only happens when attempting to restart a PM motor that is coasting to stop. • Set b3-01 to 1 to enable Speed Search at Start. • Perform Speed Search 1 or 2 (H1-□□ = 61 or 62) via one of the external terminals. **Note:** Speed Searches 1 and 2 are the same when using OLV/PM.
Hardware problem		If the problem continues, replace the control board or the entire drive. Contact Yaskawa or a Yaskawa representative for instructions on replacing the control board.

Digital Operator Display		Fault Name
LF	LF	Output Phase Loss
		• Phase loss on the output side of the drive. • Setting L8-07 to 1 or 2 enables Phase Loss Detection.
Cause		**Possible Solution**
The output cable is disconnected		• Check for wiring errors and properly connect the output cable. • Correct the wiring.
The motor winding is damaged		• Check the resistance between motor lines. • Replace the motor if the winding is damaged.
The output terminal is loose		• Apply the tightening torque specified in this manual to fasten the terminals. ***Refer to Main Circuit Wire Gauges and Tightening Torques on page 129*** for details.
The rated current of the motor being used is less than 5% of the drive rated current		Check the drive selection and motor capacities.
An output transistor is damaged		If the problem continues, replace the control board or the entire drive. Contact Yaskawa or a Yaskawa representative for instructions on replacing the control board.
A single-phase motor is being used		The drive cannot operate a single phase motor.

Digital Operator Display		Fault Name
LF2	LF2	Output Current Imbalance
		One or more of the phases in the output current are lost.
Cause		**Possible Solution**
Phase loss has occurred on the output side of the drive		• Check for faulty wiring or poor connections on the output side of the drive. • Correct the wiring.
Terminal wires are loose on the output side of the drive		Apply the tightening torque specified in this manual to fasten the terminals. ***Refer to Main Circuit Wire Gauges and Tightening Torques on page 129*** for details.
The output circuit is damaged		If the problem continues, replace the control board or the entire drive. Contact Yaskawa or a Yaskawa representative for instructions on replacing the control board.
Motor impedance or motor phases are uneven		• Measure the line-to-line resistance for each motor phase. Ensure all values match. • Replace the motor.

Digital Operator Display		Fault Name
LF3 <1>	LF3	Power Unit Output Phase Loss 3
		• Phase loss occurred on the output side • Setting L8-78 to 1 enables Power Unit Output Phase Loss Protection
Cause		**Possible Solution**
The gate drive board in the power unit is damaged.		Cycle the power supply. ***Refer to Diagnosing and Resetting Faults on page 447*** for details. If the fault continues to occur, replace the gate drive board or the entire drive. Contact Yaskawa or a Yaskawa representative for instructions on replacing the gate drive board.
Cable to the current detection circuit in the power unit is damaged or not connected properly.		Check for incorrect wiring and correct any wiring mistakes.
Cable between the output rector and the power unit is loose or not connected.		Contact Yaskawa or your nearest sales representative for instructions.

<1> Detected in models 4A0930 and 4A1200.

Digital Operator Display		Fault Name
LSo <1>	LSo	LSo Fault
		Pull-out has been detected at low speed.
Cause		**Possible Solution**
The incorrect motor code has been entered.		• Enter the correct motor code for the PM motor being used into E5-01. • For special-purpose motors, enter the correct data to all E5 parameters according to the test report provided for the motor.
The load is too heavy.		• Reduce the load. • Use a larger drive.
The drive incorrectly detected the position of the motor poles.		• Make sure some external force is not rotating the motor at start. • Enable Speed Search Selection at start. (b3-01 = 1). • If the value displayed in U6-57 is lower than 819, then set the polarity judge current (n8-84) higher than the default value. If the motor is to be operated at a speed higher than the rated speed, consult with the manufacturer.
Values set to parameters L8-93, L8-94, and L8-95 are incorrect.		• Increase the value set to L8-93. • Increase the value set to L8-94. • Increase the value set to L8-95.

<1> This function prevents continuous operation in reverse when using high frequency injection (n8-57 = 1) in AOLV/PM (A1-02 = 6) with a motor for which no motor code has been entered (it does not only prevent reverse operation). Set L8-93, L8-94, and L8-95 to low values within range of erroneous detection to quickly detect undesirable reverse operation.

Digital Operator Display		Fault Name
nSE	nSE	Node Setup Error
		A terminal assigned to the node setup function closed during run.
Cause		**Possible Solution**
Overcurrent occurred during Overexcitation Deceleration.		Reduce the overexcitation deceleration gain (n3–13).
The node setup terminal closed during run.		Stop the drive when using the node setup function.
A Run command was issued while the node setup function was active.		

Digital Operator Display		Fault Name
oC	oC	Overcurrent
		Drive sensors detected an output current greater than the specified overcurrent level.
Cause		**Possible Solution**
The motor has been damaged due to overheating or the motor insulation is damaged		• Check the insulation resistance. • Replace the motor.
One of the motor cables has shorted out or there is a grounding problem		• Check the motor cables. • Remove the short circuit and reapply power to the drive.
		• Check the resistance between the motor cables and the ground terminal ⏚. • Replace damaged cables.
The drive is damaged		• Check the drive output side short circuit for a broken output transistor B1 and U/T1, V/T2, W/T3 – and U/T1, V/T2, W/T3 • Contact your Yaskawa representative or nearest Yaskawa sales office.
The load is too heavy		• Measure the current flowing into the motor. • Replace the drive with a larger capacity drive if the current value exceeds the rated current. • Determine if there is sudden fluctuation in the current level. • Reduce the load to avoid sudden changes in the current level or switch to a larger drive.
The acceleration or deceleration times are too short		Calculate the torque needed during acceleration relative to the load inertia and the specified acceleration time. If it is not possible to set the proper amount of torque, make the following changes: • Increase the acceleration time (C1-01, C1-03, C1-05, C1-07) • Increase the S-curve characteristics (C2-01 through C2-04) • Increase the capacity of the drive.
The drive is attempting to operate a specialized motor or a motor larger than the maximum size allowed		• Check the motor capacity. • Ensure that the rated capacity of the drive is greater than or equal to the capacity rating found on the motor nameplate.
Magnetic contactor (MC) on the output side of the drive has turned on or off		Set up the operation sequence so the MC does not trip while the drive is outputting current.
V/f setting is not operating as expected		• Check the ratios between the voltage and frequency. • Set parameters E1-04 through E1-10 appropriately (E3-04 through E3-10 for motor 2). • Lower the voltage if it is too high relative to the frequency.
Excessive torque compensation		• Check the amount of torque compensation. • Reduce the torque compensation gain (C4-01) until there is no speed loss and less current.
Drive fails to operate properly due to electrical signal interference		• Review the possible solutions provided for handling electrical signal interference. • Review the section on handling noise interference on page *454* and check the control circuit lines, main circuit lines, and ground wiring.
Overexcitation gain is set too high		• Check if the fault occurs simultaneously with overexcitation function operation. • Consider motor flux saturation and reduce the value of n3-13 (Overexcitation Deceleration Gain).
Run command was applied while motor was coasting		• Set b3-01 to 1 to enable Speed Search at Start. • Program the Speed Search command input through one of the multi-function contact input terminals (H1-□□ = 61 or 62).
The wrong motor code has been entered for OLV/PM (Yaskawa motors only) or the motor data are wrong		• Enter the correct motor code to E5-01. • Set E5-01 to FFFF if using a non-Yaskawa PM motor. Set the correct motor data to the E5-□□ parameters or perform Auto-Tuning.
The overcurrent level has exceeded the value set to L8-27 (PM control modes)		Correct the value set to overcurrent detection gain (L8-27).
The motor control method and motor do not match		• Check the control mode. • For IM motors, set A1-02 to 0, 1, 2, or 3. • For PM motors, set A1-02 to 5, 6, or 7.
The rated output current of the drive is too small		Use a larger drive.

Digital Operator Display		Fault Name
oFA00	oFA00	Option Card Connection Error at Option Port CN5-A
		Option compatibility error
Cause		**Possible Solution**

Digital Operator Display	Fault Name
The option card installed into port CN5-A is incompatible with the drive	Check if the drive supports the option card to be installed. Contact Yaskawa or a Yaskawa representative for assistance.
A PG option card is connected to option port CN5-A	PG option cards are supported by option ports CN5-B and CN5-C only. Connect the PG option card to the correct option port.

Digital Operator Display		Fault Name
oFA01	oFA01	Option Card Fault at Option Port CN5-A
		Option not properly connected
Cause		**Possible Solution**
The option card connection to port CN5-A is faulty		• Turn off the power and reconnect the option card. • Check if the option card is properly plugged into the option port. Make sure the card is fixed properly. • If the option is not a communication option card, try to use the card in a different option port. If the option card works properly in a different option port, CN5-A is damaged, and the drive requires replacement. If the error persists (oFb01 or oFC01 occur), replace the option card.

Digital Operator Display		Fault Name
oFA03 to oFA06	oFA03 to oFA06	Option Card Error Occurred at Option Port CN5-A
oFA10, oFA11	oFA10, oFA11	
oFA12 to oFA17	oFA12 to oFA17	Option Card Connection Error (CN5-A)
oFA30 to oFA43	oFA30 to oFA43	Communication Option Card Connection Error (CN5-A)
Cause		**Possible Solution**
Option card or hardware is damaged		• Cycle power to the drive. • If the problem continues, replace the control board or the entire drive. Contact Yaskawa or a Yaskawa representative for instructions on replacing the control board.

Digital Operator Display		Fault Name
oFb00	oFb00	Option Card Fault at Option Port CN5-B
		Option compatibility error
Cause		**Possible Solution**
The option card installed into port CN5-B is incompatible with the drive		Make sure the drive supports the option card to be installed. Contact Yaskawa or a Yaskawa representative for assistance.
A communication option card has been installed in option port CN5-B		Communication option cards are only supported by option port CN5-A. It is not possible to install more than one communication option.

Digital Operator Display		Fault Name
oFb01	oFb01	Option Card Fault at Option Port CN5-B
		Option not properly connected
Cause		**Possible Solution**
The option card connection to port CN5-B is faulty		• Turn off the power and reconnect the option card. • Check if the option card is properly plugged into the option port. Make sure the card is fixed properly. • Try to use the card in a different option port (in case of a PG option, use port CN5-C). If the option card works properly in a different option port, CN5-B is damaged, and the drive requires replacement. If the error persists (oFA01 or oFC01 occur), replace the option card.

Digital Operator Display		Fault Name
oFb02	oFb02	Option Card Fault at Option Port CN5-B
		Same type of option card is currently connected
Cause		**Possible Solution**
An option card of the same type is already installed in option port CN5-A		Except for PG options, only one of each option card type can only be installed simultaneously. Make sure only one type of option card is connected.
An input option card is already installed in option port CN5-A		Install a communication option, a digital input option, or an analog input option. More than one of the same type of card cannot be installed simultaneously.

Digital Operator Display		Fault Name
oFb03 to oFb11	oFb03 to oFb11	Option card error occurred at Option Port CN5-B
oFb12 to oFb17	oFb12 to oFb17	
Cause		**Possible Solution**

Digital Operator Display	Fault Name
Option card or hardware is damaged	• Cycle power to the drive. • If the problem continues, replace the control board or the entire drive. Contact Yaskawa or a Yaskawa representative for instructions on replacing the control board.

Digital Operator Display		Fault Name
oFC00	oFC00	Option Card Connection Error at Option Port CN5-C
		Option compatibility error
Cause		**Possible Solution**
The option card installed into port CN5-C is incompatible with the drive		Confirm that the drive supports the option card to be installed. Contact Yaskawa or a Yaskawa representative for assistance.
A communication option card has been installed in option port CN5-C		Communication option cards are only supported by option port CN5-A. It is not possible to install more than one communication option.

Digital Operator Display		Fault Name
oFC01	oFC01	Option Card Fault at Option Port CN5-C
		Option not properly connected
Cause		**Possible Solution**
The option card connection to port CN5-C is faulty.		• Turn the power off and reconnect the option card. • Check if the option card is properly plugged into the option port. Make sure the card is fixed properly. • Try to use the card in a different option port (in case of a PG option, use port CN5-B). If the option card works properly in a different option port, CN5-C is damaged, and the drive requires replacement. If the error persists (oFA01 or oFb01 occur), replace the option card.

Digital Operator Display		Fault Name
oFC02	oFC02	Option Card Fault at Option Port CN5-C
		Same type of option card is currently connected
Cause		**Possible Solution**
An option card of the same type is already installed in option port CN5-A or CN5-B.		Except for PG options, only one of each option card type can only be installed simultaneously. Make sure only one type of option card is connected.
An input option card is already installed in option port CN5-A or CN5-B.		Install a communication option, a digital input option, or an analog input option. More than one of the same type of card cannot be installed simultaneously.
Three PG option boards are installed.		A maximum of two PG option boards can be used simultaneously. Remove the PG option board installed into option port CN5-A.

Digital Operator Display		Fault Name
oFC03 to oFC11	oFC03 to oFC11	Option Card Error Occurred at Option Port CN5-C
oFC12 to oFC17	oFC12 to oFC17	
Cause		**Possible Solution**
Option card or hardware is damaged		• Cycle power to the drive. • If the problem continues, replace the control board or the entire drive. Contact Yaskawa or a Yaskawa representative for instructions on replacing the control board.

Digital Operator Display		Fault Name
oFC50 to oFC55	oFC50 to oFC55	Option Card Error Occurred at Option Port CN5-C
Cause		**Possible Solution**
Option card or hardware is damaged		Refer to the option manual for details.

Digital Operator Display		Fault Name
oH	oH	Heatsink Overheat
		The heatsink temperature exceeded the overheat pre-alarm level set to L8-02. The default value for L8-02 is determined by drive model selection (o2-04).
Cause		**Possible Solution**
Surrounding temperature is too high		• Check the temperature surrounding the drive. Verify temperature is within drive specifications. • Improve the air circulation within the enclosure panel. • Install a fan or air conditioner to cool the surrounding area. • Remove anything near the drive that might be producing excessive heat.

Digital Operator Display	Fault Name
Load is too heavy	• Measure the output current. • Decrease the load. • Lower the carrier frequency selection (C6-02).
Internal cooling fan is stopped	• Replace the cooling fan. • After replacing the cooling fan, set parameter o4-03 to 0 to reset the cooling fan maintenance.

Digital Operator Display		Fault Name
oH1	oH1	Overheat 1 (Heatsink Overheat) The heatsink temperature exceeded the drive overheat level. Overheat level is determined by drive capacity (o2-04).
Cause		**Possible Solution**
Surrounding temperature is too high		• Check the temperature surrounding the drive. • Improve the air circulation within the enclosure panel. • Install a fan or air conditioner to cool the surrounding area. • Remove anything near the drive that might be producing excessive heat.
Load is too heavy		• Measure the output current. • Lower the carrier frequency selection (C6-02). • Reduce the load.

Digital Operator Display		Fault Name
oH3	oH3	Motor Overheat Alarm (PTC Input) • The motor overheat signal to analog input terminal A1, A2, or A3 exceeded the alarm detection level. • Detection requires setting multi-function analog inputs H3-02, H3-10, or H3-06 to E.
Cause		**Possible Solution**
Motor has overheated		• Check the size of the load, the accel/decel times, and the cycle times. • Decrease the load. • Increase the acceleration and deceleration times (C1-01 through C1-08).
		• Adjust the preset V/f pattern (E1-04 through E1-10) by reducing E1-08 and E1-10. • Do not set E1-08 and E1-10 too low. This reduces load tolerance at low speeds.
		• Check the motor rated current. • Enter the motor rated current to parameter E2-01 as indicated on the motor nameplate. • Ensure the motor cooling system is operating normally. • Repair or replace the motor cooling system.

Digital Operator Display		Fault Name
oH4	oH4	Motor Overheat Fault (PTC Input) • The motor overheat signal to analog input terminal A1, A2, or A3 exceeded the fault detection level. • Detection requires setting multi-function analog inputs H3-02, H3-10, or H3-06 to E.
Cause		**Possible Solution**
Motor has overheated		• Check the size of the load, the accel/decel times, and the cycle times. • Decrease the load. • Increase the acceleration and deceleration times (C1-01 through C1-08).
		• Adjust the preset V/f pattern (E1-04 through E1-10) by reducing E1-08 and E1-10. • Do not set E1-08 and E1-10 too low. This reduces load tolerance at low speeds.
		• Check the motor rated current. • Enter the motor rated current to parameter E2-01 as indicated on the motor nameplate. • Ensure the motor cooling system is operating normally. • Repair or replace the motor cooling system.

Digital Operator Display		Fault Name
oH5 <1>	oH5	Motor Overheat (NTC Input) The motor temperature exceeded the level set to L1-16 (or L1-18 for motor 2)
Cause		**Possible Solution**
Motor has overheated		• Reduce the load. • Check the ambient temperature.

<1> Detected in models 4A0930 and 4A1200.

Digital Operator Display		Fault Name
oL1	oL1	Motor Overload
		The electronic motor overload protection tripped
Cause		**Possible Solution**
Load is too heavy		Reduce the load. **Note:** Reset oL1 when the U4-16 value falls below 100.0%. U4-16 value must be less than 100.0% before oL1 can be reset.
Cycle times are too short during acceleration and deceleration		Increase the acceleration and deceleration times (C1-01 through C1-08).
A general-purpose motor is driven below the rated speed with a high load		• Reduce the load. • Increase the speed. • If the motor is supposed to operate at low speeds, either increase the motor capacity or use a motor specifically designed to operate in the desired speed range.
V/f characteristics (voltage and frequency) are not suitable		Set the V/f pattern setting parameters (E1-04 to E1-10) to match the motor characteristics.
The wrong motor rated current is set to E2-01		• Check the motor-rated current. • Enter the motor rated current to parameter E2-01 as indicated on the motor nameplate.
Multiple motors are running off the same drive		Set L1-01 to 0 to disable the motor protection function and then install a thermal relay to each motor.
The electrical thermal protection characteristics and motor overload characteristics do not match		• Check the motor characteristics. • Correct the type of motor protection that has been selected (L1-01). • Install an external thermal relay.
The electrical thermal relay is operating at the wrong level		• Check the current rating listed on the motor nameplate. • Check the value set for the motor rated current (E2-01).
Motor overheated by overexcitation operation		• Overexcitation increases the motor loss and the motor temperature. Excessive duration of overexcitation may cause motor damage. Prevent excessive overexcitation operation or apply proper cooling to the motor. • Reduce the excitation deceleration gain (n3-13). • Set L3-04 (Stall Prevention during Deceleration) to a value other than 4. • Set n3-23 (Overexcitation Operation Selection) to 0 (disabled).
Parameters related to Speed Search are set incorrectly		• Check values set to Speed Search related parameters. • Adjust the Speed Search current and Speed Search deceleration times (b3-02 and b3-03 respectively). • After Auto-Tuning, set b3-24 to 1 to enable Speed Estimation Speed Search.
Output current fluctuation due to power supply loss		Check the power supply for phase loss.

Digital Operator Display		Fault Name
oL2	oL2	Drive Overload
		The thermal sensor of the drive triggered overload protection.
Cause		**Possible Solution**
Load is too heavy		Reduce the load.
Acceleration or deceleration time is too short		Increase the settings for the acceleration and deceleration times (C1-01 through C1-08).
V/f characteristics (voltage) are not suitable		Set the V/f pattern setting parameters (E1-04 to E1-10) to match the motor characteristics.
Drive capacity is too small		Replace the drive with a larger model.
Overload occurred when operating at low speeds		• Reduce the load when operating at low speeds. • Replace the drive with a model that is one frame size larger. • Lower the carrier frequency (C6-02).
Excessive torque compensation		Reduce the torque compensation gain in parameter C4-01 until there is no speed loss but less current.
Parameters related to Speed Search are set incorrectly		• Check the settings for all Speed Search related parameters. • Adjust the current used during Speed Search (b3-03) and the Speed Search deceleration time (b3-02). • After Auto-Tuning, set b3-24 to 1 to enable Speed Estimation Speed Search.
Output current fluctuation due to input phase loss		Check the power supply for phase loss.

Digital Operator Display		Fault Name
oL3	oL3	Overtorque Detection 1
		The current has exceeded the value set for Torque Detection Level 1 (L6-02) for longer than the allowable time (L6-03).
Cause		**Possible Solution**
Parameter settings are not appropriate for the load		Check L6-02 and L6-03 settings.
Fault on the machine side (e.g., machine is locked up)		Check the status of the load. Remove the cause of the fault.

Digital Operator Display		Fault Name
oL4	oL4	Overtorque Detection 2
		The current has exceeded the value set for Torque Detection Level 2 (L6-05) for longer than the allowable time (L6-06).
Cause		**Possible Solution**
Parameter settings are not appropriate for the load		Check the settings of parameters L6-05 and L6-06.
A fault occurred on the machine (e.g., the machine is locked up when overtorque occurs.).		Check the status of the machine. Remove the cause of the fault.

Digital Operator Display		Fault Name
oL5	oL5	Mechanical Weakening Detection 1
		Overtorque occurred, matching the conditions specified in L6-08.
Cause		**Possible Solution**
Overtorque triggered mechanical weakening detection level set to L6-08		Identify the cause of mechanical weakening.

Digital Operator Display		Fault Name
oL7	oL7	High Slip Braking oL
		The output frequency stayed constant for longer than the time set to n3-04 during High Slip Braking.
Cause		**Possible Solution**
Excessive load inertia		• Reduce deceleration times in parameters C1-02, C1-04, C1-06, and C1-08 for applications that do not use High Slip Braking. • Use a braking resistor to shorten deceleration time.
Motor is driven by the load		
Something on the load side is restricting deceleration		
The overload time during High Slip Braking is too short		• Increase parameter n3-04 (High-slip Braking Overload Time). • Install a thermal relay and increase the setting of n3-04 to maximum value.

Digital Operator Display		Fault Name
oPr	oPr	External Digital Operator Connection Fault
		The external operator has been disconnected from the drive. **Note:** An oPr fault will occur when all of the following conditions are true: • Output is interrupted when the operator is disconnected (o2-06 = 1). • The Run command is assigned to the operator (b1-02 = 0 and LOCAL has been selected).
Cause		**Possible Solution**
External operator is not properly connected to the drive		• Check the connection between the operator and the drive. • Replace the cable if damaged. • Turn off the drive input power and disconnect the operator. Reconnect the operator and reapply drive input power.

Digital Operator Display		Fault Name
oS	oS	Overspeed
		The motor speed feedback exceeded the F1-08 setting.
Cause		**Possible Solution**
Overshoot is occurring		• Reduce the C5-01, Speed Control Proportional Gain 1, setting and increase the C5-02, Speed Control Integral Time 1, setting. • If using Closed Loop Vector mode, enable Feed Forward and perform Inertia Auto-Tuning.

Digital Operator Display	Fault Name
Incorrect speed feedback scaling if terminal RP is used as speed feedback input in V/f control	• Set H6-02 to the value of the speed feedback signal frequency when the motor runs at the maximum speed. • Adjust the input signal using parameters H6-03 through H6-05.
Incorrect number of PG pulses has been set	Check and correct parameter F1-01.
Inappropriate parameter settings	Check the setting for the overspeed detection level and the overspeed detection time (F1-08 and F1-09).

Digital Operator Display		Fault Name
ou	ov	Overvoltage
		Voltage in the DC bus has exceeded the overvoltage detection level. • For 200 V class drives: approximately 410 V • For 400 V class drives: approximately 820 V (740 V when E1-01 is less than 400) • For 600 V class drives: approximately 1040 V
Cause		**Possible Solution**
Deceleration time is too short and regenerative energy is flowing from the motor into the drive		• Increase the deceleration time (C1-02, C1-04, C1-06, C1-08). • Install a dynamic braking resistor or a dynamic braking resistor unit. • Set L3-04 to 1 to enable stall prevention during deceleration. Stall Prevention is enabled as the default setting.
Fast acceleration time causes the motor to overshoot the speed reference		• Check if sudden drive acceleration triggers an overvoltage alarm. • Increase the acceleration time. • Use longer S-curve acceleration and deceleration times. • Enable the Overvoltage Suppression function (L3-11 = 1). • Lengthen the S-curve at acceleration end.
Excessive braking load		The braking torque was too high, causing regenerative energy to charge the DC bus. Reduce the braking torque, use a dynamic braking option, or lengthen decel time.
Surge voltage entering from the drive input power		Install a DC link choke. **Note:** Voltage surge can result from a thyristor convertor and phase advancing capacitor using the same input power supply.
Ground fault in the output circuit causes the DC bus capacitor to overcharge		• Check the motor wiring for ground faults. • Correct grounding shorts and reapply power.
Improper parameters related to Speed Search (including Speed Search after a momentary power loss and after a fault restart)		• Check the settings for Speed Search-related parameters. • Enable Speed Search restart function (b3-19 greater than or equal to 1, up to 10). • Adjust the current level during Speed Search and the deceleration time (b3-02 and b3-03 respectively). • Perform Stationary Auto-Tuning for line-to-line resistance and then set b3-14 to 1 to enable Speed Estimation Speed Search.
Drive input power voltage is too high		• Check the voltage. • Lower drive input power voltage within the limits listed in the specifications.
The braking transistor or braking resistor are wired incorrectly		• Check braking transistor and braking resistor wiring for errors. • Properly rewire the braking resistor device.
PG cable is disconnected		Reconnect the cable.
PG cable wiring is wrong		Correct the wiring.
Electrical signal interference along the PG encoder wiring		Separate the wiring from the source of the electrical signal interference. Often, the source is the output lines from the drive.
Drive fails to operate properly due to electrical signal interference		• Review the list of possible solutions provided for controlling electrical signal interference. • Review the section on handling electrical signal interference on page *454* and check the control circuit lines, main circuit lines, and ground wiring.
Load inertia is set incorrectly		• Check the load inertia settings when using KEB, overvoltage suppression, or Stall Prevention during deceleration. • Adjust the load inertia ratio in L3-25 to better match the load.
Braking function is being used in OLV/PM		Connect a braking resistor.
Motor hunting occurs		• Adjust the parameters that control hunting. • Set the gain for Hunting Prevention (n1-02). • Adjust the AFR time constant (n2-02 and n2-03). • Adjust the speed feedback detection suppression gain for PM motors (n8-45) and the time constant for pull-in current (n8-47).

Digital Operator Display		Fault Name
PF	PF	Input Phase Loss
		Drive input power has an open phase or has a large imbalance of voltage between phases. Detected when L8-05 is set 1 (enabled).
Cause		**Possible Solution**
There is phase loss in the drive input power		• Check for wiring errors in the main circuit drive input power. • Correct the wiring.
There is loose wiring in the drive input power terminals		• Ensure the terminals are tightened properly. • Apply the tightening torque as specified in this manual. ***Refer to Main Circuit Wire Gauges and Tightening Torques on page 129*** for details.
There is excessive fluctuation in the drive input power voltage		• Check the voltage from the drive input power. • Review the possible solutions for stabilizing the drive input power.
There is poor balance between voltage phases		Stabilize drive input power or disable phase loss detection.
The main circuit capacitors are worn		• Check the maintenance time for the capacitors (U4-05). • Replace the main capacitor(s) if U4-05 is greater than 90%. For instructions on replacing the capacitor(s), contact Yaskawa or a Yaskawa representative.
		Check for problems with the drive input power. If drive input power appears normal but the alarm continues to occur, replace either the control board or the entire drive. For instructions on replacing the control board, contact Yaskawa or a Yaskawa representative.

Digital Operator Display		Fault Name
PGo	PGo	PG Disconnect (for any control modes using a PG option card)
		No PG pulses are received for longer than the time set to F1-14.
Cause		**Possible Solution**
PG cable is disconnected		Reconnect the cable.
PG cable wiring is wrong		Correct the wiring.
PG has no power		Check the power line to the PG encoder.
PG encoder brake is clamped shut		Ensure the motor brake releases properly.

Digital Operator Display		Fault Name
PGoH	PGoH	PG Hardware Fault (detected when using a PG-X3 option card)
		PG cable is not connected properly.
Cause		**Possible Solution**
PG cable is disconnected		Reconnect the cable and check the setting of F1-20.

Digital Operator Display		Fault Name
rF	rF	Braking Resistor Fault
		The resistance of the braking resistor is too low.
Cause		**Possible Solution**
The proper braking resistor option has not been installed		Select a braking resistor option that it fits the drive braking transistor specification.
A regenerative converter, regenerative unit, or braking unit is being used and the ⊕1 or ⊕3 terminal is connected to ⊖ terminal		Set L8-55 to 0 to disable the braking transistor protection selection.

Digital Operator Display		Fault Name
rH	rH	Braking Resistor Overheat
		Braking resistor protection was triggered. Fault detection is enabled when L8-01 = 1 (disabled as a default).
Cause		**Possible Solution**
Deceleration time is too short and excessive regenerative energy is flowing back into the drive		• Check the load, deceleration time, and speed. • Reduce the load inertia. • Increase the deceleration times (C1-01 to C1-08). • Replace the dynamic braking option with a larger device that can handle the power that is discharged.
The duty cycle is too high		Check the duty cycle. Maximum of 3% duty cycle is available when L8-01 = 1.
Excessive braking inertia		Recalculate braking load and braking power. Reduce the braking load by adjusting braking resistor settings.
The braking operation duty cycle is too high		Check the braking operation duty cycle. Braking resistor protection for ERF-type braking resistors (L8-01 = 1) allows a braking duty cycle of maximum 3%.
The proper braking resistor has not been installed		• Check the specifications and conditions for the braking resistor device. • Select the optimal braking resistor.
Note: The magnitude of the braking load trips the braking resistor overheat alarm, NOT the surface temperature. Using the braking resistor more frequently than its rating permits will trip the alarm even when the braking resistor surface is not very hot.		

Digital Operator Display		Fault Name
rr	rr	Dynamic Braking Transistor
		The built-in dynamic braking transistor failed.
Cause		**Possible Solution**
The braking transistor is damaged		• Cycle power to the drive and check for reoccurrence of the fault. • Replace either the control board or the entire drive. For instructions on replacing the control board, contact Yaskawa or a Yaskawa representative.
The control circuit is damaged		

Digital Operator Display		Fault Name
SC <1>	SC	Output Short Circuit or IGBT Fault
		Short circuit or ground fault is detected. **Note:** Fault reset will not be received to prevent a short-circuit of the internal circuitry caused by the IGBP fault.
Cause		**Possible Solution**
The drive is damaged		• Check the drive output side short circuit for a broken output transistor B1 and U/T1, V/T2, W/T3 – and U/T1, V/T2, W/T3 • Contact your Yaskawa representative or nearest Yaskawa sales office.
Motor has been damaged from overheat or the motor insulation has been weakened.		Check the motor insulation resistance and replace the motor if continuity is detected.
The cable is damaged and is coming into contact with something causing a short circuit.		Check the motor power cable and repair any short circuits.
Hardware fault.		A short circuit or grounding fault on the drive output side has damaged the output transistors. Make sure drive output is not shorted as follows: B1←→U, V, W – ←→U, V, W The above short circuit will damage the output transistors. Contact your Yaskawa representative or sales offices for assistance.

<1> Available in drive software versions PRG: 1015 and later.

Digital Operator Display		Fault Name
SEr	SEr	Too Many Speed Search Restarts
		The number of Speed Search restarts exceeded the value set to b3-19.
Cause		**Possible Solution**
Parameters related to Speed Search are set to the wrong values		• Reduce the detection compensation gain during Speed Search (b3-10). • Increase the current level when attempting Speed Search (b3-17). • Increase the detection time during Speed Search (b3-18). • Repeat Auto-Tuning.

Digital Operator Display	Fault Name
The motor is coasting in the opposite direction of the Run command	Set b3-14 to 1 to enable Bi-Directional Speed Search.

Digital Operator Display		Fault Name
Sto	STo	Pull-Out Detection
		Motor pull out or step out has occurred. Motor has exceeded its pull-out torque.
Cause		**Possible Solution**
The wrong motor code is set (Yaskawa motors only)		• Enter the correct motor code for the PM being used into E5-01. • For special-purpose motors, enter the correct data to all E5 parameters according to the test report provided for the motor.
Load is too heavy		• Increase the load inertia for PM motor (n8-55). • Increase the pull-in current during accel/decel (n8-51). • Reduce the load. • Use a larger motor and drive.
Load inertia is too heavy		Increase the load inertia for PM motor (n8-55).
Acceleration and deceleration times are too short		• Increase the acceleration and deceleration times (C1-01 through C1-08). • Increase the S-curve acceleration and deceleration times (C2-01).
Speed response is too slow		Increase the load inertia for PM motor (n8-55).

Digital Operator Display		Fault Name
SvE	SvE	Zero Servo Fault
		Position deviation during zero servo.
Cause		**Possible Solution**
Torque limit is set too low		Set the torque limit to an appropriate value using parameters L7-01 to L7-04.
Excessive load torque		Reduce the amount of load torque.
Electrical signal interference along PG encoder wiring		Check the PG signal for electrical signal interference.

Digital Operator Display		Fault Name
THo <1>	THo	Thermistor Disconnect
		The thermistor that detects motor temperature has become disconnected.
Cause		**Possible Solution**
The motor thermistor is not connected properly.		Check the thermistor wiring.

<1> Detected in models 4A0930 and 4A1200.

Digital Operator Display		Fault Name
UL3	UL3	Undertorque Detection 1
		The current has fallen below the minimum value set for Torque Detection Level 1 (L6-02) for longer than the allowable time (L6-03).
Cause		**Possible Solution**
Parameter settings are not appropriate for the load		Check the settings of parameters L6-02 and L6-03.
There is a fault on the machine side		Check the load for any problems.

Digital Operator Display		Fault Name
UL4	UL4	Undertorque Detection 2
		The current has fallen below the minimum value set for Torque Detection Level 2 (L6-05) for longer than the allowable time (L6-06).
Cause		**Possible Solution**
Parameter settings are not appropriate for the load		Check L6-05 and L6-06 settings
There is a fault on the machine side		Check the load for any problems.

Digital Operator Display		Fault Name
UL5	UL5	Mechanical Weakening Detection 2
		The operation conditions matched the conditions set to L6-08.
Cause		**Possible Solution**
Undertorque was detected and matched the conditions for mechanical loss detection set to L6-08		Check the load side for any problems.

Digital Operator Display		Fault Name
UnbC <1>	UnbC	Current Unbalance
		Current flow has become unbalanced.
Cause		**Possible Solution**
The internal current sensor has detected a current unbalance situation.		• Check wiring • Check for damaged transistors. • Check for short circuits or grounding problems on the connected motor.

<1> Detected in models 4A0930 and 4A1200.

Digital Operator Display		Fault Name
Uv1	Uv1	DC Bus Undervoltage
		One of the following conditions occurred while the drive was running: • Voltage in the DC bus fell below the undervoltage detection level (L2-05). • For 200 V class drives: approximately 190 V • For 400 V class drives: approximately 380 V (350 V when E1-01 is less than 400) • For 600 V class drives: approximately 475 V The fault is output only if L2-01 is set to 0 or 1 and the DC bus voltage has fallen below the level set to L2-05 for longer than the time set to L2-02.
Cause		**Possible Solution**
Input power phase loss		• The main circuit drive input power is wired incorrectly. • Correct the wiring.
One of the drive input power wiring terminals is loose		• Ensure there are no loose terminals. • Apply the tightening torque specified in this manual to fasten the terminals. ***Refer to Main Circuit Wire Gauges and Tightening Torques on page 129*** for details.
There is a problem with the voltage from the drive input power		• Check the voltage. • Correct the voltage to be within the range listed in drive input power specifications. • If there is no problem with the power supply to the main circuit, check for problems with the main circuit magnetic contactor.
The power has been interrupted		Correct the drive input power.
The main circuit capacitors are worn		• Check the maintenance time for the capacitors (U4-05). • Replace either the control board or the entire drive if U4-05 exceeds 90%. For instructions on replacing the control board, contact Yaskawa or a Yaskawa representative.
The relay or contactor on the soft-charge bypass relay is damaged		• Cycle power to the drive and see if the fault reoccurs. • Check monitor U4-06 for the performance life of the soft-charge bypass relay. • Replace either the control board or the entire drive if U4-06 exceeds 90%. For instructions on replacing the control board, contact Yaskawa or a Yaskawa representative.

Digital Operator Display		Fault Name
Uv2	Uv2	Control Power Supply Voltage Fault
		Voltage is too low for the control drive input power.
Cause		**Possible Solution**
In drive models 2A0004 to 2A0056 or 4A0002 to 4A0031, L2-02 was changed from its default value without installing a Momentary Power Loss Ride-Thru unit		Correct the setting to L2-02 or install an optional Momentary Power Loss Ride-Thru unit.
Control power supply wiring is damaged		• Cycle power to the drive. Check if the fault reoccurs. • If the problem continues, replace the control board, the entire drive, or the control power supply. For instructions on replacing the control board, contact Yaskawa or a Yaskawa representative.

Digital Operator Display	Fault Name
Internal circuitry is damaged	• Cycle power to the drive. Check if the fault reoccurs. • If the problem continues, replace either the control board or the entire drive. For instructions on replacing the control board, contact Yaskawa or a Yaskawa representative.

Digital Operator Display		Fault Name
Uu3	Uv3	Undervoltage 3 (Soft-Charge Bypass Relay Fault)
		The soft-charge bypass relay failed.
Cause		**Possible Solution**
The relay or contactor on the soft-charge bypass relay is damaged		• Cycle power to the drive and see if the fault reoccurs. • Check monitor U4-06 for the performance life of the soft-charge bypass relay. • Replace either the control board or the entire drive if U4-06 exceeds 90%. For instructions on replacing the control board, contact Yaskawa or a Yaskawa representative.

Digital Operator Display		Fault Name
Uu4 <1>	Uv4	Gate Drive Board Undervoltage
		Voltage drop in the gate drive board circuit
Cause		**Possible Solution**
Not enough power is being supplied to the gate drive board.		• Cycle power to the drive and see if the fault reoccurs. ***Refer to Diagnosing and Resetting Faults on page 447*** for details. • If the problem continues, replace either the gate drive board or the entire drive. For instructions on replacing the gate drive board, contact Yaskawa or a Yaskawa representative.

<1> Detected in models 4A0930 and 4A1200.

Digital Operator Display		Fault Name
voF	voF	Output Voltage Detection Fault
		Problem detected with the voltage on the output side of the drive.
Cause		**Possible Solution**
Hardware is damaged. Internal drive module MC / FAN overheat protection circuit board is due to abnormal ambient operating power.		• Lower ambient temperature. • Replace the control board or the entire drive. For instructions on replacing the control board, contact Yaskawa or a Yaskawa representative.

6.5 Alarm Detection

◆ Alarm Codes, Causes, and Possible Solutions

Alarms are drive protection functions that do not necessarily cause the drive to stop. After removing the cause of an alarm, the drive will return to the same status is was before the alarm occurred.

When an alarm has been triggered, the ALM light on the digital operator display blinks and the alarm code display flashes. If a multi-function output is set for an alarm (H2-□□ = 10), that output terminal will be triggered.

Note: If a multi-function output is set to close when an alarm occurs (H2-□□ = 10), it will also close when maintenance periods are reached, triggering alarms LT-1 through LT-4 (triggered only if H2-□□ = 2F).

Table 6.15 Alarm Codes, Causes, and Possible Solutions

Digital Operator Display		Minor Fault Name
AEr	AEr	Station Address Setting Error (CC-Link, CANopen, MECHATROLINK)
		Option card node address is outside of the acceptable setting range.
Cause		**Possible Solutions**
Station number is set outside the possible setting range.		• Set parameter F6-10 to the proper value when using a CC-Link option. • Set parameter F6-35 to the proper value when using a CANopen option.

Digital Operator Display		Minor Fault Name
bb	bb	Baseblock
		Drive output interrupted as indicated by an external baseblock signal.
Cause		**Possible Solutions**
External baseblock signal was entered via one of the multi-function input terminals (S1 to S8).		Check external sequence and baseblock signal input timing. **Note:** Baseblock alarm “bb” will not activate a digital output programmed for minor fault H2-0□ = 10. Set H2-0□ = 8 or 1B to activate a digital output for “bb”.

Digital Operator Display		Minor Fault Name
boL	boL	Braking Transistor Overload Fault
		The braking transistor in the drive has been overloaded.
Cause		**Possible Solutions**
The proper braking resistor has not been installed.		Select the proper braking resistor.
Use a regen converter, regen unit, braking unit, or other device to connect the +1 or +3 terminal to the - terminal.		Set L8-55 to 0 to disable Internal Braking Transistor Protection.
The use rate of the braking transistor is high (i.e., the regen converter is large or the repetition frequency is high).		• Change to a CDBR type braking unit. • Change to a regen converter. • Increase the deceleration time.
The braking transistor inside the drive is faulty.		Replace the drive.

Digital Operator Display		Minor Fault Name
bUS	bUS	Option Communication Error
		• The connection was lost after initial communication was established. • Assign a Run command frequency reference to the option.
Cause		**Possible Solutions**
Connection is broken or master controller stopped communicating.		• Check for faulty wiring. • Correct the wiring. • Check for disconnected cables and short circuits. Repair as needed.
Option is damaged.		If there are no problems with the wiring and the fault continues to occur, replace the option.
The option is not properly connected to the drive.		• The connector pins on the option are not properly lined up with the connector pins on the drive. • Reinstall the option.

Digital Operator Display	Minor Fault Name
A data error occurred due to noise.	• Check options available to minimize the effects of noise. • Take steps to counteract noise in the control circuit wiring, main circuit lines and ground wiring. • Try to reduce noise on the controller side. • Use surge absorbers on magnetic contactors or other equipment causing the disturbance. • Use recommended cables or some other type of shielded line. Ground the shield to the controller side or on the input power side. • Separate the wiring for communication devices from the drive input power lines. Install an EMC noise filter to the drive input power.

Digital Operator Display		Minor Fault Name
CALL	CALL	Serial Communication Transmission Error
		Communication has not yet been established.
Cause		**Possible Solutions**
Communications wiring is faulty, there is a short circuit, or something is not connected properly.		• Check for wiring errors. • Correct the wiring. • Check for disconnected cables and short circuits. Repair as needed.
Programming error on the master side.		Check communications at start-up and correct programming errors.
Communications circuitry is damaged.		• Perform a self-diagnostics check. • If the problem continues, replace either the control board or the entire drive. For instructions on replacing the control board, contact Yaskawa or a Yaskawa representative.
Termination resistor setting is incorrect.		Install a termination resistor at both ends of a communication line. Set the internal termination resistor switch correctly on slave drives. Place DIP switch S2 to the ON position.

Digital Operator Display		Minor Fault Name
CE	CE	MEMOBUS/Modbus Communication Error
		Control data was not received correctly for two seconds.
Cause		**Possible Solutions**
A data error occurred due to noise.		• Check options available to minimize the effects of noise. • Take steps to counteract noise in the control circuit wiring, main circuit lines, and ground wiring. • Reduce noise on the controller side. • Use surge absorbers for the magnetic contactors or other components that may be causing the disturbance. • Use only recommended shielded line. Ground the shield on the controller side or on the drive input power side. • Separate all wiring for communication devices from drive input power lines. Install an EMC noise filter to the drive input power supply.
Communication protocol is incompatible.		• Check the H5 parameter settings and the protocol setting in the controller. • Ensure settings are compatible.
The CE detection time (H5-09) is set shorter than the time required for a communication cycle to take place.		• Check the PLC. • Change the software settings in the PLC. • Set a longer CE detection time using parameter H5-09.
Incompatible PLC software settings or there is a hardware problem.		• Check the PLC. • Remove the cause of the error on the controller side.
Communications cable is disconnected or damaged.		• Check the connector to make sure the cable has a signal. • Replace the communications cable.

Digital Operator Display		Minor Fault Name
CrST	CrST	Cannot Reset
Cause		**Possible Solutions**
Fault reset was being executed when a Run command was entered.		• Ensure that a Run command cannot be entered from the external terminals or option during fault reset. • Turn off the Run command.

Digital Operator Display		Minor Fault Name
CyC	CyC	MECHATROLINK Comm. Cycle Setting Error
		Comm. Cycle Setting Error was detected.
Cause		**Possible Solutions**
The controller is using a comm. cycle beyond the allowable setting range for the MECHATROLINK option.		Set the comm. cycle for the upper controller within the allowable setting range for the MECHATROLINK option.

Digital Operator Display		Minor Fault Name
dEv	dEv	Speed Deviation (when using a PG option card and AOLV/PM without PG)
		The deviation between the speed reference and speed feedback is greater than the setting in F1-10 for longer than the time in F1-11.
Cause		**Possible Solutions**
Load is too heavy		Reduce the load.
Acceleration and deceleration times are set too short.		Increase the acceleration and deceleration times (C1-01 through C1-08).
The load is locked up.		Check the machine.
Parameter settings are inappropriate.		Check the settings of parameters F1-10 and F1-11 .
Incorrect speed feedback scaling when using terminal RP as speed feedback input in V/f Control.		• Set H6-02 to value of the speed feedback signal frequency when the motor runs at the maximum speed. • Adjust the speed feedback signal using parameters H6-03 through H6-05. • Make sure the speed feedback signal frequency does not exceed the maximum input frequency of terminal RP.
The motor brake engaged.		Ensure the brake releases properly.

Digital Operator Display		Minor Fault Name
dnE	dnE	Drive Disabled
Cause		**Possible Solutions**
"Drive Enable" is set to a multi-function contact input (H1-□□ = 6A) and that signal was switched off.		Check the operation sequence.

Digital Operator Display		Minor Fault Name
EF	EF	Forward/Reverse Run Command Input Error
		Both forward run and reverse run closed simultaneously for longer than 0.5 s.
Cause		**Possible Solutions**
Sequence error		Check the forward and reverse command sequence and correct the problem. **Note:** When minor fault EF detected, motor ramps to stop.

Digital Operator Display		Minor Fault Name
EF0	EF0	Option Card External Fault
		An external fault condition is present.
Cause		**Possible Solutions**
An external fault was received from the PLC with F6-03 set to 3, which allows the drive to continue running after an external fault occurs.		• Remove the cause of the external fault. • Remove the external fault input from the PLC.
There is a problem with the PLC program.		Check the PLC program and correct problems.

Digital Operator Display		Minor Fault Name
EF1	EF1	External Fault (Input Terminal S1)
		External fault at multi-function input terminal S1.
EF2	EF2	External fault (input terminal S2)
		External fault at multi-function input terminal S2.
EF3	EF3	External fault (input terminal S3)
		External fault at multi-function input terminal S3.
EF4	EF4	External fault (input terminal S4)
		External fault at multi-function input terminal S4.
EF5	EF5	External fault (input terminal S5)
		External fault at multi-function input terminal S5.
EF6	EF6	External fault (input terminal S6)
		External fault at multi-function input terminal S6.
EF7	EF7	External fault (input terminal S7)
		External fault at multi-function input terminal S7.

Digital Operator Display		Minor Fault Name
EF8	EF8	External fault (input terminal S8)
		External fault at multi-function input terminal S8.
Cause		**Possible Solutions**
An external device has tripped an alarm function.		Remove the cause of the external fault and reset the multi-function input value.
Wiring is incorrect.		• Ensure the signal lines have been connected properly to the terminals assigned for external fault detection (H1-□□ = 2C to 2F). • Reconnect the signal line.
Multi-function contact inputs are set incorrectly.		• Check if the unused terminals have been set for H1-□□ = 2C to 2F (External Fault). • Change the terminal settings.

Digital Operator Display		Minor Fault Name
FAn	FAn	Internal Fan Fault
		Fan or magnetic contactor failure (detected when L8-32 = 3 or 4)
Cause		**Possible Solution**
Internal cooling fan has malfunctioned		• Cycle power to the drive. • Check for fan operation. • Verify the cumulative operation time of the fan with monitor U4-03, and verify the cumulative operation time of the fan maintenance timer with U4-04. • If the cooling fan has exceeded its expected performance life or is damaged in any other way, replace the fan.
Fault detected in the internal cooling fan or magnetic contactor to the power supply.		• Cycle power to the drive. • If the fault continues to occur, replace the power board/gate drive board or the entire drive. • Contact Yaskawa or a Yaskawa representative for instructions on replacing the power board/gate drive board.

Digital Operator Display		Minor Fault Name
FbH	FbH	Excessive PID Feedback
		The PID feedback input is higher than the level set to b5-36 for longer than the time set to b5-37, and b5-12 is set to 1 or 4.
Cause		**Possible Solutions**
Parameter settings for b5-36 and b5-37 are incorrect.		Check parameters b5-36 and b5-37.
PID feedback wiring is faulty.		Correct the wiring.
Feedback sensor has malfunctioned.		Check the sensor and replace it if damaged.
Feedback input circuit is damaged.		Replace either the control board or the entire drive. For instructions on replacing the control board, contact Yaskawa or a Yaskawa representative.

Digital Operator Display		Minor Fault Name
FbL	FbL	PID Feedback Loss
		The PID feedback input is lower than the level set to b5-13 for longer than the time set to b5-14.
Cause		**Possible Solutions**
Parameter settings for b5-13 and b5-14 are incorrect.		Check parameters b5-13 and b5-14.
PID feedback wiring is faulty.		Correct the wiring.
Feedback sensor has malfunctioned.		Check the sensor and replace it if damaged.
Feedback input circuit is damaged.		Replace either the control board or the entire drive. For instructions on replacing the control board, contact Yaskawa or a Yaskawa representative.

Digital Operator Display		Minor Fault Name
Hbb	Hbb	Safe Disable Signal Input
		Both Safe Disable Input channels are open.
Cause		**Possible Solutions**
Both Safe Disable Inputs H1 and H2 are open.		• Check signal status at the input terminals H1 and H2. • Check the Sink/Source Selection for the digital inputs. • If the Safe Disable function is not utilized, determine if terminals H1-HC, and H2-HC are linked.

Digital Operator Display	Minor Fault Name
Internally, both Safe Disable channels are broken.	Replace either the control board or the entire drive. For instructions on replacing the control board, contact Yaskawa or your nearest sales representative.

Digital Operator Display		Minor Fault Name
HbbF	HbbF	Safe Disable Signal Input
		One Safe Disable channel is open while the other channel is closed.
Cause		**Possible Solutions**
The signals to the Safe Disable inputs are wrong or the wiring is incorrect.		Check signal status at the input terminals H1 and H2. If the Safe Disable function is not utilized, terminals H1-HC, and H2-HC must be linked.
One of the Safe Disable channels is faulty.		Replace either the control board or the entire drive. For instructions on replacing the control board, contact Yaskawa or your nearest sales representative.

Digital Operator Display		Minor Fault Name
HCA	HCA	Current Alarm
		Drive current exceeded overcurrent warning level (150% of the rated current).
Cause		**Possible Solutions**
Load is too heavy.		Reduce the load for applications with repetitive operations (i.e., stops and starts), or use a larger drive.
Acceleration and deceleration times are too short.		• Calculate the torque required during acceleration and for the moment of inertia. • If the torque level is not right for the load, take the following steps: • Increase the acceleration and deceleration times (C1-01 through C1-08). • Use a larger drive.
A special-purpose motor is being used, or the drive is attempting to run a motor greater than the rated output current.		• Check the motor capacity. • Use a motor appropriate for the drive. Ensure the motor is within the rated output current range.
The current level increased due to Speed Search after a momentary power loss or while attempting to perform a fault restart.		The alarm will only appear briefly. There is no need to take action to prevent the alarm from occurring in such instances.

Digital Operator Display		Minor Fault Name
LT-1	LT-1	Cooling Fan Maintenance Time
		The cooling fan has reached its expected maintenance period and may need to be replaced. **Note:** The signal closes when the maintenance period ends if H2-□□ = 2F. The signal will not close if H2-□□ = 10.
Cause		**Possible Solutions**
The cooling fan has reached 90% of its expected performance life.		Replace the cooling fan and set o4-03 to 0 to reset the Maintenance Monitor.

Digital Operator Display		Minor Fault Name
LT-2	LT-2	Capacitor Maintenance Time
		The main circuit and control circuit capacitors are nearing the end of their expected performance life. **Note:** The signal closes when the maintenance period ends if H2-□□ = 2F. The signal will not close if H2-□□ = 10.
Cause		**Possible Solutions**
The main circuit and control circuit capacitors have reached 90% of their expected performance lives.		Replace the drive.

Digital Operator Display		Minor Fault Name
LT-3	LT-3	Soft Charge Bypass Relay Maintenance Time
		The DC bus soft charge relay is nearing the end of its expected performance life. **Note:** The signal closes when the maintenance period ends if H2-□□ = 2F. The signal will not close if H2-□□ = 10.
Cause		**Possible Solutions**
The DC bus soft charge relay has reached 90% of expected performance life.		Replace the drive.

Digital Operator Display		Minor Fault Name
LT-4	LT-4	IGBT Maintenance Time (50%)
		IGBTs have reached 50% of their expected performance life. **Note:** The signal closes when the maintenance period ends if H2-□□ = 2F. The signal will not close if H2-□□ = 10.
Cause		**Possible Solutions**
IGBTs have reached 50% of their expected performance life.		Check the load, carrier frequency, and output frequency.

Digital Operator Display		Minor Fault Name
oH	oH	Heatsink Overheat
		The temperature of the heatsink exceeded the overheat pre-alarm level set to L8-02 (90-100 °C). Default value for L8-02 is determined by drive model selection (o2-04).
Cause		**Possible Solutions**
Surrounding temperature is too high		• Check the surrounding temperature. • Improve the air circulation within the enclosure panel. • Install a fan or air conditioner to cool surrounding area. • Remove anything near drive that may cause extra heat.
Internal cooling fan has stopped.		• Replace the cooling fan. • After replacing the drive, set parameter o4-03 to 0 to reset the cooling fan operation time.
Airflow around the drive is restricted.		• Provide proper installation space around the drive as indicated in the manual. ***Refer to Installation Orientation and Spacing on page 54*** for details. • Allow for the proper space and ensure that there is sufficient circulation around the control panel.
		• Check for dust or other foreign materials clogging the cooling fan. • Clear debris caught in the fan that restricts air circulation.

Digital Operator Display		Minor Fault Name
oH2	oH2	Heatsink Overheat Warning
		"Heatsink Overheat Warning" was input to a multi-function input terminal, S1 through S8 (H1-□□= B).
Cause		**Possible Solutions**
An external device triggered an overheat warning in the drive.		Search for the device that tripped the overheat warning. Remove the cause of the problem.

Digital Operator Display		Minor Fault Name
oH3	oH3	Motor Overheat
		The motor overheat signal entered to a multi-function analog input terminal exceeded the alarm level (H3-02, H3-06 or H3-10 = E).
Cause		**Possible Solutions**
Motor thermostat wiring is faulty (PTC input).		Repair the PTC input wiring.
There is a fault on the machine side (e.g., the machine is locked up).		• Check the status of the machine. • Remove the cause of the fault.
Motor has overheated.		• Check the load size, accel/decel times, and cycle times. • Decrease the load. • Increase accel and decel times (C1-01 to C1-08). • Adjust the preset V/f pattern (E1-04 through E1-10). This involves reducing E1-08 and E1-10. **Note:** Refrain from lowering E1-08 and E1-10 excessively to prevent a reduction in load tolerance at low speeds. • Check the motor-rated current. • Enter motor-rated current on motor nameplate (E2-01). • Ensure the motor cooling system is operating normally. • Repair or replace the motor cooling system.

Digital Operator Display		Minor Fault Name
oH5 <1>	oH5	Motor Overheat (NTC Input)
		The motor temperature exceeded the level set to L1-16 (or L1-18 for motor 2)
Cause		**Possible Solutions**

Digital Operator Display	Minor Fault Name
Motor has overheated.	• Reduce the load. • Check the ambient temperature.

<1> Detected in models 4A0930 and 4A1200.

Digital Operator Display		Minor Fault Name
oL3	oL3	Overtorque 1
		Drive output current (or torque in OLV, CLV, AOLV/PM, and CLV/PM) was greater than L6-02 for longer than the time set to L6-03.
Cause		**Possible Solutions**
Inappropriate parameter settings.		Check parameters L6-02 and L6-03.
There is a fault on the machine side (e.g., the machine is locked up).		• Check the status of the machine. • Remove the cause of the fault.

Digital Operator Display		Minor Fault Name
oL4	oL4	Overtorque 2
		Drive output current (or torque in OLV, CLV, AOLV/PM, CLV/PM) was greater than L6-05 for longer than the time set to L6-06.
Cause		**Possible Solutions**
Parameter settings are not appropriate.		Check parameters L6-05 and L6-06.
There is a fault on the machine side (e.g., the machine is locked up).		• Check the status of the machine being used. • Remove the cause of the fault.

Digital Operator Display		Minor Fault Name
oL5	oL5	Mechanical Weakening Detection 1
		Overtorque occurred, matching the conditions specified in L6-08.
Cause		**Possible Solutions**
Overtorque occurred, triggering the mechanical weakening level set to L6-08.		Check for the cause of mechanical weakening.

Digital Operator Display		Minor Fault Name
oS	oS	Overspeed
		The motor speed feedback exceeded the F1-08 setting.
Cause		**Possible Solutions**
Overshoot is occurring.		• Increase the settings for C5-01 (Speed Control Proportional Gain 1) and reduce C5-02 (Speed Control Integral Time 1). • If using a Closed Loop Vector mode enable Feed Forward Control and perform Inertia Auto-Tuning.
Incorrect speed feedback scaling if terminal RP is used as speed feedback input in V/f control		• Set H6-02 to value of the speed feedback signal frequency when the motor runs at the maximum speed. • Adjust the input signal using parameters H6-03 through H6-05.
Incorrect PG pulse number has been set		Check and correct parameter F1-01.
Inappropriate parameter settings.		Check the setting for the overspeed detection level and the overspeed detection time (F1-08 and F1-09).

Digital Operator Display		Minor Fault Name
ov	ov	DC Bus Overvoltage
		The DC bus voltage exceeded the trip point. • For 200 V class drives: approximately 410 V • For 400 V class drives: approximately 820 V (740 V when E1-01 is less than 400) • For 600 V class drives: approximately 1040 V
Cause		**Possible Solutions**
Surge voltage present in the drive input power.		• Install a DC link choke or an AC reactor. • Voltage surge can result from a thyristor convertor and a phase advancing capacitor operating on the same drive input power system.
The motor is short-circuited.		• Check the motor power cable, relay terminals and motor terminal box for short circuits. • Correct grounding shorts and turn the power back on.
Ground current has overcharged the main circuit capacitors via the drive input power.		

Digital Operator Display	Minor Fault Name
Electrical signal interference causes the drive to operate incorrectly.	• Review possible solutions for handling electrical signal interference. • Review section on handling electrical signal interference and check control circuit lines, main circuit lines and ground wiring. • If the magnetic contactor is identified as a source of electrical signal interference, install a surge protector to the MC coil.
	Set number of fault restarts (L5-01) to a value other than 0.
PG cable is disconnected.	Reconnect the cable.
PG cable wiring is wrong.	Correct the wiring.
Electrical signal interference along PG encoder wiring.	Separate PG wiring from the source of the interference (often output wiring from the drive).

Digital Operator Display		Minor Fault Name
PASS	PASS	MEMOBUS/Modbus Comm. Test Mode Complete
Cause		**Possible Solutions**
MEMOBUS/Modbus test has finished normally.		This verifies that the test was successful.

Digital Operator Display		Minor Fault Name
PGo	PGo	PG Disconnect (for Control Mode with PG)
		Detected when no PG pulses are received for a time longer than setting in F1-14.
Cause		**Possible Solutions**
PG cable is disconnected.		Reconnect the cable.
PG cable wiring is wrong.		Correct the wiring.
PG encoder does not have enough power.		Make sure the correct power supply is properly connected to the PG encoder.
Brake is holding the PG.		Ensure the brake releases properly

Digital Operator Display		Minor Fault Name
PGoH	PGoH	PG Hardware Fault (detected when using a PG-X3 option card)
		PG cable has become disconnected.
Cause		**Possible Solutions**
PG cable is disconnected.		Reconnect the cable and check the setting of F1-20.

Digital Operator Display		Minor Fault Name
rUn	rUn	Motor Switch during Run
		A command to switch motors was entered during run.
Cause		**Possible Solutions**
A motor switch command was entered during run.		Change the operation pattern so that the motor switch command is entered while the drive is stopped.

Digital Operator Display		Minor Fault Name
SE	SE	MEMOBUS/Modbus Communication Test Mode Error **Note:** This alarm will not trigger a multi-function output terminal that is set for alarm output (H2-□□ = 10).
Cause		**Possible Solutions**
A digital input set to 67H (MEMOBUS/Modbus test) was closed while the drive was running.		Stop the drive and run the test again.

Digital Operator Display		Minor Fault Name
THo <1>	THo	Thermistor Disconnect
		The thermistor used to detect motor temperature has become disconnected.
Cause		**Possible Solutions**
The motor thermistor is not connected properly.		Check the thermistor wiring.

<1> Detected in models 4A0930 and 4A1200.

Digital Operator Display		Minor Fault Name
rrPC	TrPC	IGBT Maintenance Time (90%)
		IGBTs have reached 90% of their expected performance life.
Cause		**Possible Solutions**
IGBTs have reached 90% of their expected performance life.		Replace the drive.

Digital Operator Display		Minor Fault Name
UL3	UL3	Undertorque Detection 1
		Drive output current (or torque in OLV, CLV, AOLV/PM, and CLV/PM) less than L6-02 for longer than L6-03 time.
Cause		**Possible Solutions**
Inappropriate parameter settings.		Check parameters L6-02 and L6-03.
Load has dropped or decreased significantly.		Check for broken parts in the transmission system.

Digital Operator Display		Minor Fault Name
UL4	UL4	Undertorque Detection 2
		Drive output current (or torque in OLV, CLV, AOLV/PM, and CLV/PM) less than L6-05 for longer than L6-06 time.
Cause		**Possible Solutions**
Inappropriate parameter settings.		Check parameters L6-05 and L6-06.
The load has dropped or decreased significantly.		Check for broken parts in the transmission system.

Digital Operator Display		Minor Fault Name
Uv	Uv	Undervoltage
		One of the following conditions was true when the drive was stopped and a Run command was entered: • DC bus voltage dropped below the level specified in L2-05. • Contactor to suppress inrush current in the drive was opened. • Low voltage in the control drive input power. This alarm outputs only if L2-01 is not 0 and DC bus voltage is under L2-05.
Cause		**Possible Solutions**
Phase loss in the drive input power.		Check for wiring errors in the main circuit drive input power. Correct the wiring.
Loose wiring in the drive input power terminals.		• Ensure the terminals have been properly tightened. • Apply the tightening torque to the terminals as specified. ***Refer to Main Circuit Wire Gauges and Tightening Torques on page 129***.
There is a problem with the drive input power voltage.		• Check the voltage. • Lower the voltage of the drive input power so that it is within the limits listed in the specifications.
Drive internal circuitry is worn.		• Check the maintenance time for the capacitors (U4-05). • Replace either the control board or the entire drive if U4-05 exceeds 90%. For instructions on replacing the control board, contact Yaskawa or your nearest sales representative.
The drive input power transformer is too small and voltage drops when the power is switched on.		• Check for an alarm when the magnetic contactor, line breaker, and leakage breaker are closed. • Check the capacity of the drive input power transformer.
Air inside the drive is too hot.		Check the temperature inside the drive.
The CHARGE light is broken or disconnected.		Replace either the control board or the entire drive. For instructions on replacing the control board, contact Yaskawa or your nearest sales representative.

Digital Operator Display		Minor Fault Name
voF	voF	Output Voltage Detection Fault
		There is a problem with the output voltage.
Cause		**Possible Solutions**
Hardware is damaged.		Replace either the control board or the entire drive. For instructions on replacing the control board, contact Yaskawa or your nearest sales representative.

6.6 Operator Programming Errors

◆ Operator Programming Error Codes, Causes, and Possible Solutions

An Operator Programming Error (oPE) occurs when a contradictory parameter is set or an individual parameter is set to an inappropriate value.

The drive will not operate until the parameter or parameters causing the problem are set correctly. An oPE, however, does not trigger an alarm or fault output. If an oPE occurs, investigate the cause and refer to *Table 6.16* for the appropriate action. When oPE02 or oPE08 appear on the operator display, press the ENTER button to view U1-18 and see which parameter is causing the oPE.

Table 6.16 oPE Codes, Causes, and Possible Solutions

Digital Operator Display		Error Name
oPE01	oPE01	Drive Capacity Setting Fault Drive capacity and the value set to o2-04 do not match.
Cause		**Possible Solutions**
The drive model selection (o2-04) and the actual capacity of the drive are not the same.		Correct the value set to o2-04.

Digital Operator Display		Error Name
oPE02	oPE02	Parameter Range Setting Error Use U1-18 to find parameters set outside the range.
Cause		**Possible Solutions**
Parameters were set outside the possible setting range.		Set parameters to the proper values.
Note: When multiple errors occur simultaneously, other errors are given precedence over oPE02.		

Digital Operator Display		Error Name
oPE03	oPE03	Multi-Function Input Selection Error A contradictory setting is assigned to multi-function contact inputs H1-01 to H1-08.
Cause		**Possible Solutions**
• The same function is assigned to two multi-function inputs. • Excludes “Not used” and “External Fault.”		• Ensure all multi-function inputs are assigned to different functions. • Re-enter the multi-function settings to ensure this does not occur.
The Up command was set but the Down command was not, or vice versa (settings 10 vs. 11).		Properly set the functions that required for use in combination with other functions.
The Up 2 command was set but the Down 2 command was not, or vice versa (settings 75 vs. 76).		
• Run/Stop command for a 2-wire sequence was set (H1-□□ = 42), but Forward/Reverse command (H1-□□ = 43) was not. • “Drive Enable” is set to multi-function input S1 or S2 (H1-01 = 6A or H1-02 = 6A).		Properly set the functions that required for use in combination with other functions.
Two of the following functions are set simultaneously: • Up/Down Command (10 vs. 11) • Up 2/Down 2 Command (75 vs. 76) • Hold Accel/Decel Stop (A) • Analog Frequency Reference Sample/Hold (1E) • Offset Frequency 1, 2, 3 Calculations (44, 45, 46)		• Check if contradictory settings have simultaneously been assigned to the multi-function input terminals. • Correct setting errors.
The Up/Down command (10, 11) and PID control (b5-01) are enabled simultaneously.		Set b5-01 to 0 to disable control PID or disable the Up/Down command.

Digital Operator Display	Error Name
Settings for N.C. and N.O. input for the following functions were selected simultaneously: • External Search Command 1 and External Search Command 2 (61 vs. 62) • Fast Stop N.O. and Fast Stop N.C. (15 vs. 17) • KEB for Momentary Power Loss and High Slip Braking (65, 66, 7A, 7B vs. 68) • Motor Switch Command and Accel/Decel Time 2 (16 vs. 1A) • KEB Command 1 and KEB Command 2 (65, 66 vs. 7A, 7B) • FWD Run Command (or REV) and FWD/REV Run Command (2-wire) (40, 41 vs. 42, 43) • External DB Command and Drive Enable (60 vs. 6A) • Motor Switch Command and Up 2/Down 2 Command (16 vs. 75, 76)	• Check if contradictory settings have simultaneously been assigned to the multi-function input terminals. • Correct setting errors.
One of the following settings was entered while H1-□□ = 2 (External Reference 1/2): • b1-15 = 4 (Pulse Train Input) but the pulse train input selection is not set for the frequency reference (H6-01 > 0) • b1-15 or b1-16 set to 3 but no option card is connected • Although b1-15 = 1 (Analog Input) and H3-02 or H3-10 are set to 0 (Frequency Bias)	Correct the settings for the multi-function input terminal parameters.
H2-□□ is set to 38 (Drive Enabled) and H1-□□ is not set to 6A (Drive Enable).	
H1-□□ is set to 7E (Direction Detection) and H6-01 is not set to 3 (for V/f Control with PG using terminal RP as speed feedback input).	
H1-□□ is set to 16 when using PG-RT3.	Correct the setting. PG-RT3 is not available for the application with Motor 2 selection.

Digital Operator Display		Error Name
oPE04	oPE04	Initialization Required
Cause		**Possible Solutions**
The drive, control board, or terminal board have been replaced and the parameter settings between the control board and the terminal board no longer match.		Set A1-03 to 5550 to load the parameter settings stored in the terminal board to the drive. Initialize parameters after drive replacement by setting A1-03 to 2220 or 3330.

Digital Operator Display		Error Name
oPE05	oPE05	Run Command/Frequency Reference Source Selection Error
Cause		**Possible Solutions**
Frequency reference is assigned to an option card (b1-01 = 3) and an input option card is not connected to the drive.		Reconnect the input option card to the drive.
The Run command is assigned to an option card (b1-02 = 3) and an input option card is not connected to the drive.		
Frequency reference is assigned to the pulse train input (b1-01 = 4) and terminal RP is not set for frequency reference input (H6-01 > 0)		Set H6-01 to 0.
Although the digital card input is set for BCD special for a 5-digit input (F3-01 = 6), the data length is set for 8-bit or 12-bit (F3-03 = 0, 1).		Set F3-03 to 2 to set the input data for 16-bit.
The following values have been set while an AI-A3 option card is installed: • The source of frequency reference setting is assigned to an option card (b1-01 = 3). • The action for the analog card is set for separate terminal input (F2-01 = 0).		Properly set parameters.

Digital Operator Display		Error Name
oPE06	oPE06	Control Method Selection Error Correct the setting for the control method.
Cause		**Possible Solutions**
A control mode has been selected that requires a PG option card to be installed, but no PG encoder is installed (A1-02 = 1, 3, or 7).		• Connect a PG option card. • Correct the value set to A1-02.

Digital Operator Display		Error Name
oPE07	oPE07	Multi-Function Analog Input Selection Error A contradictory setting is assigned to multi-function analog inputs H3-02, H3-10, or H3-06 and PID functions conflict.
Cause		**Possible Solutions**
At least two analog input terminals are set to the same function (i.e., at least two of these parameters have the same setting: H3-02, H3-10, or H3-06).		Change the settings to H3-02, H3-10, and H3-06 so that functions no longer conflict. **Note:** Both 0 (Frequency Reference Bias) and F (Not Used) can be set to H3-02, H3-10, or H3-06 simultaneously.
The following simultaneous contradictory settings: • H3-02, H3-10, or H3-06 = B (PID Feedback) while H6-01 (Pulse Train Input) = 1 (PID Feedback) • H3-02, H3-10, or H3-06 = C (PID Target Value) while H6-01 = 2 (pulse train input sets the PID target value) • H3-02, H3-10, or H3-06 = C (PID Target Value) while b5-18 = 1 (enables b5-19 as the target PID value) • H6-01 = 2 (PID target) while b5-18 = 1 (enables b5-19 as the target PID value)		Disable one of the PID selections.

Digital Operator Display		Error Name
oPE08	oPE08	Parameter Selection Error A function has been set that cannot be used in the motor control method selected.
Cause		**Possible Solutions**
Attempted to use a function that is not valid for the selected control mode.		Check the motor control method and the functions available.
In OLV, n2-02 is longer than n2-03		Adjust parameter values so n2-02 is shorter than n2-03.
In OLV, C4-02 is longer than C4-06		Adjust parameter values so C4-02 is shorter than C4-06.
In OLV/PM, parameters E5-02 to E5-07 are set to 0.		• Set the correct motor code in accordance with the motor being used (E5-01). • When using a special-purpose motor, set E5-□□ in accordance with the test report provided.
The following settings have occurred in OLV/PM: • E5-03 does not equal 0 • E5-09 and E5-24 are both equal to 0, or neither equals 0		• Set E5-09 or E5-24 to the correct value, and set the other to 0. • Set the motor rated current for PM to 0 (E5-03).
In AOLV/PM High Frequency Injection is disabled (n8-57 = 0) and the minimum frequency (E1-09) is set lower than 1/20 of the base frequency setting.		Correct the parameter settings or set n8-57 to 1 to enable High Frequency Injection.
Note: Use U1-18 to find parameters that are set outside the specified setting range. When multiple errors occur simultaneously, other errors are given precedence over oPE08.		

Digital Operator Display		Error Name
oPE09	oPE09	PID Control Selection Fault PID control function selection is incorrect. Requires that PID control is enabled (b5-01 = 1 to 4).
Cause		**Possible Solutions**
The following simultaneous contradictory settings have occurred: • b5-15 is not set to 0.0 (PID Sleep Function Operation Level) • The stopping method is set to either DC Injection Braking or coast to stop with a timer (b1-03 = 2 or 3).		• Set b5-15 to a value other than 0.0. • Set the stopping method to coast to stop or ramp to stop (b1-03 = 0 or 1).
b5-01 is set to 1 or 2, enabling PID control, but the lower limit for the frequency reference (d2-02) is not set to 0 while reverse output is enabled (b5-11 = 1).		Correct the parameter settings.
b5-01 is set to 3 or 4, enabling PID control, but the lower limit for the frequency reference (d2-01) is not 0.		Correct the parameter settings.

Digital Operator Display		Error Name
oPE10	oPE10	V/f Data Setting Error
		One or more of the parameters listed below are not set according to the formula: • E1-09 ≤ E1-07 < E1-06 ≤ E1-11 ≤ E1-04 • E3-09 ≤ E3-07 < E3-06 ≤ E3-11 ≤ E3-04
Cause		**Possible Solutions**
V/f pattern setting error.		Correct the settings for E1-04, E1-06, E1-07, E1-09, and E1-11. For motor 2, correct E3-04, E3-06, E3-07, E3-09, and E3-11.

Digital Operator Display		Error Name
oPE11	oPE11	Carrier Frequency Setting Error
		Correct the setting for the carrier frequency.
Cause		**Possible Solutions**
The following simultaneous contradictory settings have occurred: C6-05 > 6 and C6-04 > C6-03 (carrier frequency lower limit is greater than the upper limit). If C6-05 ≤ 6, the drive operates at C6-03.		Correct the parameter settings.
The upper and lower limits between C6-02 and C6-05 are contradictory.		

Digital Operator Display		Error Name
oPE13	oPE13	Pulse Monitor Selection Error
		Incorrect setting of monitor selection for pulse train (H6-06).
Cause		**Possible Solutions**
Scaling for the pulse train monitor is set to 0 (H6-07 = 0) while H6-06 is not set to 101, 102, 105, or 116.		Change scaling for the pulse train monitor or set H6-06 to 101, 102, 105, or 116.

Digital Operator Display		Error Name
oPE15	oPE15	Torque Control Setting Error
		Parameter settings that are not allowed in combination with Torque Control have been set.
Cause		**Possible Solutions**
Torque Control is enabled (d5-01 = 1) while the Speed/Torque Control switch function is assigned to a digital input (H1-□□ = 71).		Correct the parameter settings.
Either d5-01 is set to 1 to enable Torque Control, or the Speed/Torque Control switch is assigned to a digital input H1-□□ = 71, while at the same time: • Feed Forward is enabled (n5-01 = 1), or • Droop Control is enabled (b7-01 ≠ 0), or • Intelligent Stall Prevention or Intelligent Stall Prevention 2 is enabled (L3-04 = 2 or 5), or • A digital input is set for the power KEB 1 or KEB 2 (H1-□□ = 7A or 7B)		

Digital Operator Display		Error Name
oPE16	oPE16	Energy Savings Constants Error
Cause		**Possible Solutions**
In AOLV/PM, the automatically calculated energy saving coefficients are out of the allowable range.		Check and correct the motor data in E5 parameters.

Digital Operator Display		Error Name
oPE18	oPE18	Online Tuning Parameter Setting Error
		Parameters controlling online tuning are not set correctly.
Cause		**Possible Solutions**
One of the following errors occurred while online tuning was enabled in OLV (A1-02 = 2): • E2-02 was set below 30% of the original default value • E2-06 was set below 50% of the original default value • E2-03 = 0		Set E2-02, E2-03, and E2-06 to the correct values.

Digital Operator Display		Error Name
oPE20	oPE20	PG-F3 Setting Error The encoder signal frequency is too high.
Cause		**Possible Solutions**
With the entered encoder resolution (F1-01), maximum output frequency (E1-04), and motor pole number (E5-04), the calculation encoder signal frequency exceeded 50 kHz (with PG-F3 option).		• Set F1-01 to the correct encoder resolution. • Reduce the maximum output frequency of the drive in parameter E1-04 so the encoder signal frequency at maximum speed is lower than 50 kHz.

◆ Causes and Possible Solutions for a Blank and Unresponsive Digital Operator

Table 6.17 Causes and Possible Solutions for a Blank and Unresponsive Digital Operator

Cause	Possible Solutions
A short circuit between +V, -V, and AC terminals.	Correct wiring
Control circuit terminal overload.	Check the resistance and wiring for the frequency setting potentiometer, etc. Check that the current for terminals +V and -V is 20 mA or less.
The short circuit bar between terminals +1 and +2 in the main circuit has been removed.	Attach the short circuit bar.
Braking unit terminals P and N are connected in reverse.	• Check the Braking unit wiring including cables connected to the Braking unit and relay terminals. • Replace the drive.
Control power circuit failure	Charge indicator is lit: • Replace the digital operator • Replace the drive control board. Charge indicator is not lit: • Check the input power supply voltage • Replace the drive.
Malfunction occurred in the control power circuit.	Turn OFF the power, wait for 5 minutes, then turn ON the power again.
Digital operator contact failure	Turn OFF the power, remove the digital operator, then replace the digital operator.

6.7 Auto-Tuning Fault Detection

Auto-Tuning faults in this section are displayed on the digital operator and will cause the motor to coast to a stop. Auto-Tuning faults do not trigger a multi-function digital output set for fault or alarm output.

An End☐ error on the digital operator display indicates Auto-Tuning has successfully completed with discrepancies in the calculations. Restart Auto-Tuning after fixing the cause of the End☐ error.

The drive may be used in the application if no cause can be identified despite the existence of an End☐ error.

An Er☐ error indicates that Auto-Tuning has not completed successfully. Check for the cause of the error using the tables in this section, and perform Auto-Tuning again after fixing the cause.

◆ Auto-Tuning Codes, Causes, and Possible Solutions

Table 6.18 Auto-Tuning Codes, Causes, and Possible Solutions

Digital Operator Display		Error Name
End1	End1	Excessive V/f Setting (detected only during Rotational Auto-Tuning and displayed after Auto-Tuning is complete)
Cause		**Possible Solutions**
The torque reference exceeded 20% during Auto-Tuning.		• Prior to Auto-Tuning, verify the information on the motor nameplate. • Enter proper values from motor nameplate to parameters T1-03 to T1-05 and repeat Auto-Tuning. • If possible, disconnect the motor from the load and perform Auto-Tuning. If the load cannot be uncoupled, use the current Auto-Tuning results.
The results from Auto-Tuning the no-load current exceeded 80%.		

Digital Operator Display		Error Name
End2	End2	Motor Iron-Core Saturation Coefficient (detected only during Rotational Auto-Tuning and displayed after Auto-Tuning is complete)
Cause		**Possible Solutions**
Motor data entered during Auto-Tuning was incorrect.		• Make sure the data entered to the T1 parameters match the information written on the motor nameplate. • Restart Auto-Tuning and enter the correct information.
Results from Auto-Tuning are outside the parameter setting range, assigning the iron-core saturation coefficients (E2-07 and E2-08) to temporary values.		• Check and correct faulty motor wiring. • Disconnect the motor from machine and perform Rotational Auto-Tuning.

Digital Operator Display		Error Name
End3	End3	Rated Current Setting Alarm (displayed after Auto-Tuning is complete)
Cause		**Possible Solutions**
The correct current rating printed on the motor nameplate was not entered into T1-04.		• Check the setting of parameter T1-04. • Check the motor data and repeat Auto-Tuning.

Digital Operator Display		Error Name
End4	End4	Adjusted Slip Calculation Error
Cause		**Possible Solutions**
The calculated slip is outside the allowable range.		• Make sure the data entered for Auto-Tuning is correct. • If possible, perform Rotational Auto-Tuning. If not possible, perform Stationary Auto-Tuning 2.

Digital Operator Display		Error Name
End5	End5	Resistance Tuning Error
Cause		**Possible Solutions**
The calculated resistance value is outside the allowable range.		• Double-check the data entered for the Auto-Tuning process. • Check the motor and motor cable connection for faults.

Digital Operator Display		Error Name
End6	End6	Leakage Inductance Alarm
Cause		**Possible Solutions**
A1-02 setting error.		• Double-check the data entered for the Auto-Tuning process. • Check the setting of A1-02. • Check the control mode and repeat Auto-Tuning.

Digital Operator Display		Error Name
End7	End7	No-Load Current Alarm
Cause		**Possible Solutions**
The entered no-load current value was outside the allowable range.		Check and correct faulty motor wiring.
Auto-Tuning results were less than 5% of the motor rated current.		Double-check the data entered for the Auto-Tuning process.

Digital Operator Display		Error Name
Er-01	Er-01	Motor Data Error
Cause		**Possible Solutions**
Motor data or data entered during Auto-Tuning was incorrect .		• Check that the motor data entered to T1 parameters matches motor nameplate input before Auto-Tuning. • Restart Auto-Tuning and enter the correct information.
Motor rated power and motor-rated current settings (T1-02 and T1-04) do not match.		• Check the drive and motor capacities. • Correct the settings of parameters T1-02 and T1-04.
Motor rated current and detected no-load current are inconsistent.		• Check the motor rated current and no-load current. • Correct the settings of parameters T1-04 and E2-03.
Base frequency and motor rated speed (T1-05 and T1-07) do not match.		• Correct the settings of parameters T1-05 and T1-07. • Check that the correct number of poles were entered to T1-06.

Digital Operator Display		Error Name
Er-02	Er-02	Minor Fault
Cause		**Possible Solutions**
An alarm was triggered during Auto-Tuning.		Exit the Auto-Tuning menu, check the alarm code, remove the alarm cause, and repeat Auto-Tuning.
Motor data entered during Auto-Tuning was incorrect.		• Check that the motor data entered matches the motor nameplate input before performing Auto-Tuning (T1-02 to T1-07). • Restart Auto-Tuning and enter the correct information.
Faulty cable connection The load is too heavy		• Check and correct faulty motor wiring. • Check the vicinity of the machine. • Check the load conditions. • Investigate and correct the cause and then reset the fault.

Digital Operator Display		Error Name
Er-03	Er-03	STOP Button Input
Cause		**Possible Solutions**
Auto-Tuning canceled by pressing STOP button.		Auto-Tuning did not complete properly. Restart Auto-Tuning.

Digital Operator Display		Error Name
Er-04	Er-04	Line-to-Line Resistance Error
Cause		**Possible Solutions**
Motor data entered during Auto-Tuning was incorrect.		• Make sure the data entered to the T1 parameters match the information written on the motor nameplate. • Restart Auto-Tuning and enter the correct information.
Results from Auto-Tuning are outside the parameter setting range or the tuning process took too long.		Check and correct faulty motor wiring.
Faulty motor cable or cable connection.		

Digital Operator Display		Error Name
Er-05	Er-05	No-Load Current Error
Cause		**Possible Solutions**
Motor data entered during Auto-Tuning was incorrect.		• Make sure the data entered to the T1 parameters match the information written on the motor nameplate. • Restart Auto-Tuning and enter the correct information.
Results from Auto-Tuning are outside the parameter setting range or the tuning process took too long.		• Check and correct faulty motor wiring. • Perform Rotational Auto-Tuning.
The load was too high during Rotational Auto-tuning.		• Disconnect the motor from machine and restart Auto-Tuning. If motor and load cannot be uncoupled make sure the load is lower than 30%. • If a mechanical brake is installed, make sure it is fully lifted during tuning.

Digital Operator Display		Error Name
Er-08	Er-08	Rated Slip Error
Cause		**Possible Solutions**
Motor data entered during Auto-Tuning was incorrect.		• Make sure the data entered to the T1 parameters match the information written on the motor nameplate. • Restart Auto-Tuning and enter the correct information.
Results from Auto-Tuning are outside the parameter setting range or the tuning process took too long.		• Check and correct faulty motor wiring. • Perform Rotational Auto-Tuning.
The load was too high during rotational Auto-tuning.		• Disconnect the motor from machine and restart Auto-Tuning. If motor and load cannot be uncoupled make sure the load is lower than 30%. • If a mechanical brake is installed, make sure it is fully lifted during tuning.

Digital Operator Display		Error Name
Er-09	Er-09	Acceleration Error
Cause		**Possible Solutions**
The motor did not accelerate for the specified acceleration time.		• Increase the acceleration time (C1-01). • Disconnect the machine from the motor if possible.
Torque limit when motoring is too low (L7-01 and L7-02).		• Check L7-01 and L7-02 settings. • Increase the setting.
The load was too high during Rotational Auto-Tuning.		• Disconnect the motor from machine and restart Auto-Tuning. If motor and load cannot be uncoupled make sure the load is lower than 30%. • If a mechanical brake is installed, make sure it is fully lifted during tuning.

Digital Operator Display		Error Name
Er-10	Er-10	Motor Direction Error
Cause		**Possible Solutions**
The encoder signal lines are not properly connected to the drive.		Check and correct wiring to the PG encoder.
Motor direction and PG direction are opposite.		Check the motor speed monitor U1-05 while manually turning the motor forward. If the sign displayed is negative, change the setting of parameter F1-05.
The load pulled the motor in the opposite direction of the speed reference and the torque exceeded 100%.		Uncouple the motor from the load and restart Auto-Tuning.

Digital Operator Display		Error Name
Er-11	Er-11	Motor Speed Error
Cause		**Possible Solutions**
Torque reference is too high.		• Increase the acceleration time 1 (C1-01). • Disconnect the machine from the motor if possible.

Digital Operator Display		Error Name
Er - 12	Er-12	Current Detection Error
Cause		**Possible Solutions**
One of the motor phases is missing: (U/T1, V/T2, W/T3).		Check motor wiring and correct any problems.
The current exceeded the current rating of the drive.		• Check motor wiring for a short between motor lines. • Close any magnetic contactors used between motors. • Replace the control board or the entire drive. For instructions on replacing the control board, contact Yaskawa or a Yaskawa representative.
The current is too low.		
Attempted Auto-Tuning without motor connected to the drive.		Connect the motor and restart Auto-Tuning.
Current detection signal error.		Replace the control board or the entire drive. For instructions on replacing the control board, contact Yaskawa or a Yaskawa representative.

Digital Operator Display		Error Name
Er-13	Er-13	Leakage Inductance Error
Cause		**Possible Solutions**
Drive was unable to complete tuning for leakage inductance within 300 seconds.		• Check all wiring and correct any mistakes. • Check the motor rated current value written on the motor nameplate and enter the correct value to T1-04.

Digital Operator Display		Error Name
Er-14	Er-14	Motor Speed Error 2
Cause		**Possible Solutions**
The motor speed exceeded twice the amplitude of speed reference during Inertia Tuning.		Reduce the ASR gain set to C5-01.

Digital Operator Display		Error Name
Er-15	Er-15	Torque Saturation Error
Cause		**Possible Solutions**
The output torque reached the torque limit set in L7-01 through L7-04 during Inertia Tuning.		• Increase the torque limits in L7-01 through L7-04 within reasonable limits. • Reduce the test signal frequency in T3-01 and restart Auto-Tuning. If necessary, reduce the test signal amplitude (T3-02) and restart Auto-Tuning.

Digital Operator Display		Error Name
Er-16	Er-16	Inertia ID Error
Cause		**Possible Solutions**
The inertia identified by the drive was abnormally small or abnormally large during Inertia Tuning.		• Reduce the test signal frequency in T3-01 and restart Auto-Tuning. If necessary, reduce the test signal amplitude (T3-02) and restart Auto-Tuning. • Check the basic motor inertia value entered to T3-03.

Digital Operator Display		Error Name
Er-17	Er-17	Reverse Prohibited Error
Cause		**Possible Solutions**
Drive is prohibited from rotating the motor in reverse while attempting to perform Inertia Tuning.		• Inertia Auto-Tuning cannot be performed if the drive is restricted from rotating in reverse. • Assuming it is acceptable for the application to rotate in reverse, set b1-04 to 0 and then perform Inertia Tuning.

Digital Operator Display		Error Name
Er-18	Er-18	Induction Voltage Error
Cause		**Possible Solutions**
The result of Back EMF Constant Tuning (induced voltage) exceeds the allowable setting range.		Double-check the data entered to the T2-□□ parameters and restart Auto-Tuning.

Digital Operator Display		Error Name
Er-19	Er-19	PM Inductance Error
Cause		**Possible Solutions**
The induced voltage constant attempted to set a value to E5-08 or E5-09 that is outside the allowable range.		Double-check the data entered to the T2-□□ parameters and restart Auto-Tuning.

Digital Operator Display		Error Name
Er-20	Er-20	Stator Resistance Error
Cause		**Possible Solutions**
Stator resistance tuning attempted to set a value to E5-06 that is outside the allowable setting range.		Double-check the data entered to the T2-□□ parameters and restart Auto-Tuning.

Digital Operator Display		Error Name
Er-21	Er-21	Z Pulse Correction Error
Cause		**Possible Solutions**
Motor was coasting when Auto-Tuning was performed.		Make sure the motor comes to a complete stop. Repeat Auto-Tuning.
Either the motor or the PG encoder on the motor are not properly wired.		Check the wiring for the motor and the PG encoder. Restart Auto-Tuning.
The direction for the PG encoder is set incorrectly, or the number of pulses set for the PG encoder is wrong.		Check the direction and number of pulses set for the PG encoder. Restart Auto-Tuning.
PG encoder is damaged.		Check the signal output from the PG encoder attached to the motor. Replace the PG if damaged.
Motor inertia is large.		Increase the setting of n8-02 (Pole Attraction Current).
Z-Pulse Offset Tuning was performed when b1-04 was set to 1.		• Z-Pulse Offset Tuning cannot be performed for a machine with reverse operation prohibited. • If the machine allows reverse operation, set b1-04 to 0 to enable Reverse Operation Selection and then perform Z-Pulse Offset Tuning.
Motor vibrates during tuning.		• Increase the setting of n8-03, Current Startup Time, and n8-04, Pole Attraction Time. • Decrease the setting of n8-02, Pole Attraction Current.

Digital Operator Display		Error Name
Er-25	Er-25	High Frequency Injection Parameter Tuning Error
Cause		**Possible Solutions**
Motor data was incorrect.		Perform Stationary Auto-Tuning and then perform High Frequency Injection Parameter Tuning again. If the problem continues, high frequency injection control might not be possible with that motor. **Note:** Auto-Tuning is not applicable for SPM motors.

6.8 Copy Function Related Displays

◆ Tasks, Errors, and Troubleshooting

The table below lists the messages and errors that may appear when using the Copy function.

When executing the tasks offered by the Copy function, the operator will indicate the task being performed. When an error occurs, a code appears on the operator to indicate the error. Note that errors related to the Copy function do not trigger a multi-function output terminal that has been set up to close when a fault or alarm occurs. To clear an error, simply press any key on the operator and the error display will disappear.

Table 6.19 lists the corrective action that can be taken when an error occurs.

Note:
1. Whenever using the copy function, the drive should be fully stopped.
2. The drive will not accept a Run command while the Copy function is being executed.
3. Parameters can only be saved to a drive when the voltage class, capacity, control mode, and software version match.

Table 6.19 Copy Function Task and Error Displays

Digital Operator Display		Task
CoPy	CoPy	Writing Parameter Settings (flashing)
Cause		**Possible Solutions**
Parameters are being written to the drive.		This is not an error.

Digital Operator Display		Task
CPEr	CPEr	Control Mode Mismatch
Cause		**Possible Solutions**
Control mode of the parameters to be loaded onto the drive and the control mode set to the drive do not match.		• Verify the control mode for the parameters to be loaded onto the drive and the control mode on drive to which those parameters will be written. • Set the same control mode using parameter A1-02 and retry.

Digital Operator Display		Task
CPyE	CPyE	Error Writing Data
Cause		**Possible Solutions**
Failed writing parameters		Attempt to write parameters again.

Digital Operator Display		Task
CSEr	CSEr	Copy Unit Error
Cause		**Possible Solutions**
Hardware fault		Replace the operator or the USB Copy Unit.

Digital Operator Display		Task
dFPS	dFPS	Drive Model Mismatch
Cause		**Possible Solutions**
The drives used in the copy and write process are not the same model. • The drive from which the parameters were copied is a different model. • The drive to be written to is a different model.		• Verify the model number of the drive from which the parameters were copied and the model of the drive to which those parameters will be written. • Make sure the two drives are the same model and have the same software version.

Digital Operator Display		Task
End	End	Task Complete
Cause		**Possible Solutions**
Finished reading, writing, or verifying parameters.		This is not an error.

Digital Operator Display		Task
iFEr	iFEr	Communication Error
Cause		**Possible Solutions**
A communication error occurred between the drive and the operator or the USB copy unit.		Check the cable connection.

Digital Operator Display	Task
A non-compatible cable is being used to connect the USB Copy Unit and the drive.	Use the cable originally packaged with the USB Copy Unit.

Digital Operator Display		Task
ndAT	ndAT	Model, Voltage Class, Capacity Mismatch
Cause		**Possible Solutions**
The drive from which the parameters were copied and the drive to which the parameters will be written have different electrical specifications, capacities, are set to different control modes, or are different models.		Make sure model numbers and specifications are the same for both drives.
The device being used to write the parameters is blank and does not have any parameters saved on it.		Make sure all connections are correct, and copy the parameter settings onto the USB Copy Unit or the operator.

Digital Operator Display		Task
rdEr	rdEr	Error Reading Data
Cause		**Possible Solutions**
Failed while attempting to read parameter settings from the drive.		Press and hold the READ key on the USB Copy Unit for at least one second to have the unit read parameters from the drive.

Digital Operator Display		Task
rEAd	rEAd	Reading Parameter Settings (flashing)
Cause		**Possible Solutions**
Displayed while the parameter settings are being read onto the USB Copy Unit.		This is not an error.

Digital Operator Display		Task
vAEr	vAEr	Voltage Class, Capacity Mismatch
Cause		**Possible Solutions**
The drive from which the parameters were copied and the drive on which the Verify mode is being performed have different electrical specifications or are a different capacity.		Make sure electrical specifications and capacities are the same for both drives.

Digital Operator Display		Task
vFyE	vFyE	Parameter settings in the drive and those saved to the copy function are not the same
Cause		**Possible Solutions**
Indicates that parameter settings that have been Read and loaded onto the Copy Unit or Digital Operator are different.		To synchronize parameters, either write the parameters saved on the USB Copy Unit or digital operator onto the drive, or Read the parameter settings on the drive onto the USB Copy Unit.

Digital Operator Display		Task
vrFy	vrFy	Comparing Parameter Settings (flashing)
Cause		**Possible Solutions**
The Verify mode has confirmed that parameters settings on the drive and parameters read to the copy device are identical.		This is not an error.

6.9 Diagnosing and Resetting Faults

When a fault occurs and the drive stops, follow the instructions below to remove whatever conditions triggered the fault, then restart the drive.

Note: An oC/SC fault will be displayed in the event of an IGBT failure. It may not be possible to reset this fault until the IGBT problem is corrected.

◆ Fault Occurs Simultaneously with Power Loss

WARNING! *Electrical Shock Hazard. Ensure there are no short circuits between the main circuit terminals (R/L1, S/L2, and T/L3) or between the ground and main circuit terminals before restarting the drive. Do not immediately restart models 4A0930 and 4A1200 or operate peripheral devices if a fuse is blown or a GFCI has tripped. Failure to comply may result in serious injury or death and will cause damage to equipment.*

1. Turn on the drive input power.
2. Use monitor parameters U2-□□ to display data on the operating status of the drive just before the fault occurred.
3. Remove the cause of the fault and reset.

Note:
1. To find out what faults were triggered, check the fault history in U2-02. Information on drive status when the fault occurred such as the frequency, current, and voltage can be found in U2-03 through U2-20. ***Refer to Viewing Fault Trace Data After Fault on page 447*** for information on how to view fault data.
2. When the fault continues to be displayed after cycling power, remove the cause of the fault and reset.

◆ If the Drive Still has Power After a Fault Occurs

1. Look at the digital operator for information on the fault that occurred.
2. ***Refer to Fault Displays, Causes, and Possible Solutions on page 404***.
3. Reset the fault. ***Refer to Fault Reset Methods on page 448***.

◆ Viewing Fault Trace Data After Fault

	Step		Display/Result
1.	Turn on the drive input power. The first screen displays.	→	- MODE - DRV Rdy FREF (OPR) U1-01= 0.00Hz U1-02= 0.00Hz LSEQ U1-03= 0.00A LREF JOG FWD FWD/REV
2.	Press ∧ or ∨ until the monitor screen is displayed.	→	- MODE - DRV Rdy Monitor Menu U1-01= 0.00Hz U1-02= 0.00Hz LSEQ U1-03= 0.00A LREF JOG FWD FWD/REV
3.	Press ENTER to display the parameter setting screen.	→	-MONITR- DRV Rdy Monitor U1-01= 0.00Hz U1-02= 0.00Hz LSEQ U1-03= 0.00A LREF JOG FWD FWD/REV
4.	Press ∧ and RESET to scroll to monitor U2-02. The fault code shown in U2-02 is the fault that occurred most recently.	→	- MONITR - DRV Rdy Last Fault U2-02= oC U2-03= 0.00Hz LSEQ U2-04= 0.00Hz LREF JOG FWD FWD/REV
5.	Press ∧ to view drive status information when fault occurred. Parameters U2-03 through U2-20 help determine the cause of a fault. Parameters to be monitored differ depending on the control mode.	→	- MONITR - DRV Rdy Frequency Ref U2-03= 0.00Hz U2-04= 0.00Hz LSEQ U2-05= 0.00A LREF JOG FWD FWD/REV ⋮ - MONITR - DRV Rdy Heatsink Temp U2-20= XX °C U2-01= ----- LSEQ U2-02= ----- LREF JOG FWD FWD/REV

◆ Fault Reset Methods

When a fault occurs, the cause of the fault must be removed and the drive must be restarted. The table below lists the different ways to restart the drive.

After the Fault Occurs	Procedure	
Fix the cause of the fault, restart the drive, and reset the fault	Press RESET on the digital operator when the error code is displayed.	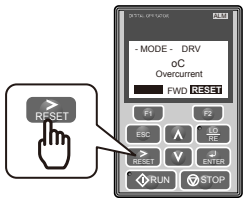
Resetting via Fault Reset Digital Input S4	Close then open the fault signal digital input via terminal S4. S4 is set for “Fault Reset” as default (H1-04 = 14).	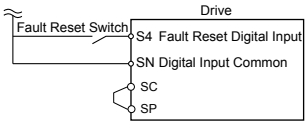
Turn off the main power supply if the above methods do not reset the fault. Reapply power after the digital operator display has turned off.		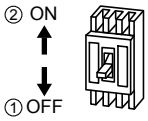

Note: If the Run command is present, the drive will disregard any attempts to reset the fault. Remove the Run command before attempting to clear a fault situation.

6.10 Troubleshooting without Fault Display

This section describes troubleshooting problems that do not trip an alarm or fault.

The following symptoms indicate that the drive is not set correctly for proper performance with the motor. *Refer to Motor Performance Fine-Tuning on page 392* for guidance on troubleshooting.

- Motor hunting and oscillation
- Poor motor torque
- Poor speed precision
- Poor motor torque and speed response
- Motor noise

◆ Common Problems

Common Problems		Page
Cannot Change Parameter Settings		449
Motor Does Not Rotate Properly after Pressing RUN Button or after Entering External Run Command	Motor Does Not Rotate	450
	Motor Rotates in the Opposite Direction from the Run Command	451
	Motor Rotates in One Direction Only	451
Motor is Too Hot		451
Drive Does Not Allow Selection of Rotational Auto-Tuning		452
oPE02 Error Occurs When Lowering the Motor Rated Current Setting		452
Motor Stalls During Acceleration or With Large Loads		452
Drive Frequency Reference Differs from the Controller Frequency Reference Command		453
Excessive Motor Oscillation and Erratic Rotation		453
Deceleration Takes Longer Than Expected with Dynamic Braking Enabled		453
Noise From Drive or Motor Cables When the Drive is Powered On		454
Ground Fault Circuit Interrupter (GFCI) Trips During Run		454
Connected Machinery Vibrates When Motor Rotates	Unexpected Noise from Connected Machinery	454
	Oscillation or Hunting	454
PID Output Fault		455
Insufficient Starting Torque		455
Motor Rotates After the Drive Output is Shut Off (Motor Rotates During DC Injection Braking)		455
Output Frequency is not as High as Frequency Reference		455
Buzzing Sound from Motor at 2 kHz		456
Unstable Motor Speed when Using PM or IPM		456
Motor Does Not Restart after Power Loss		456

◆ Cannot Change Parameter Settings

Cause	Possible Solutions
The drive is running the motor (i.e., the Run command is present).	• Stop the drive and switch over to the Programming Mode. • Most parameters cannot be edited during run.
The Access Level is set to restrict access to parameter settings.	• Set the Access Level to allow parameters to be edited (A1-01 = 2).
The operator is not in the Parameter Setup Mode (the screen will display “PAr”).	• See what mode the operator is currently set for. • Parameters cannot be edited when in the Setup Mode (“STUP”). Switch modes so that “PAr” appears on the screen. *Refer to The Drive and Programming Modes on page 160*.
A multi-function contact input terminal is set to allow or restrict parameter editing (H1-01 through H1-08 = 1B).	• When the terminal is open, parameters cannot be edited. • Turn on the multi-function contact input set to 1B.

Cause	Possible Solutions
The wrong password was entered.	• If the password entered to A1-04 does not match the password saved to A1-05, then drive settings cannot be changed. • Reset the password. If you cannot remember the password: • Scroll to A1-04. Press STOP and ∧ simultaneously. Parameter A1-05 will appear. • Set a new password to parameter A1-05.
Undervoltage was detected.	• Check the drive input power voltage by looking at the DC bus voltage (U1-07). • Check all main circuit wiring.

◆ Motor Does Not Rotate Properly after Pressing RUN Button or after Entering External Run Command

■ Motor Does Not Rotate

Cause	Possible Solutions
The drive is not in the Drive Mode.	• Check if the DRV light on the digital operator is lit. • Enter the Drive Mode to begin operating the motor. *Refer to The Drive and Programming Modes on page 160*.
The LO/RE key was pushed.	Stop the drive and check if the correct frequency reference source is selected. If the operator keypad shall be the source, the LO/RE key LED must be illuminated. If the source is REMOTE, it must be off. Take the following steps to solve the problem: • Push the LO/RE key. • If o2-01 is set to 0, then the LO/RE key will be disabled.
Auto-Tuning has just completed.	• When Auto-Tuning completes, the drive is switched back to the Programming Mode. The Run command will not be accepted unless the drive is in the Drive Mode. • Use the digital operator to enter the Drive Mode. *Refer to The Drive and Programming Modes on page 160*.
A Fast Stop was executed and has not yet been reset.	Reset the Fast Stop command.
Settings are incorrect for the source that provides the Run command.	Check parameter b1-02 (Run Command Selection). Set b1-02 so that it corresponds with the correct Run command source. 0: Digital operator 1: Control circuit terminal (default setting) 2: MEMOBUS/Modbus communications 3: Option card
There is faulty wiring in the control circuit terminals.	• Check the wiring for the control terminal. • Correct wiring mistakes. • Check the input terminal status monitor (U1-10).
The drive has been set to accept the frequency reference from the incorrect source.	Check parameter b1-01 (Frequency Reference Selection 1). Set b1-01 to the correct source of the frequency reference. 0: Digital operator 1: Control circuit terminal (default setting) 2: MEMOBUS/Modbus communications 3: Option card 4: Pulse train input (RP)
The terminal set to accept the main speed reference is set to the incorrect voltage and/or current.	Check parameter H3-01 for the correct signal level selection when setting the frequency reference at terminal A1. Check parameter H3-08 when using terminals A2 or A3. *Refer to Terminal A2 Input Signal Selection on page 147*.
Selection for the sink/source mode and the internal/external power supply is incorrect.	*Refer to Sinking/Sourcing Mode for Digital Inputs on page 145*. • Set the wire jumper between SC and SP for selection of sinking mode. • Set the wire jumper between SC and SN for selection of sourcing mode. • Remove the wire jumper for external power supply.
Frequency reference is too low.	• Check the frequency reference monitor (U1-01). • Increase the frequency by changing the maximum output frequency (E1-09).
Multi-function analog input is set up to accept gain for the frequency reference, but no voltage (current) has been provided.	• Check the multi-function analog input settings. • Check if analog input A1, A2, or A3 is set for frequency reference gain (H3-02, H3-10, H3-06 = 1). If so, check if the correct signal is applied to the terminal. The gain and the frequency reference will be 0 if no signal is applied to the gain input. • Check if H3-02, H3-10, and H3-06 have been set to the proper values. • Check if the analog input value has been set properly. (U1-13 to U1-15)

Cause	Possible Solutions
The STOP key was pressed when the drive was started from a REMOTE source.	• Pressing the STOP key will decelerate the drive to stop. • Switch off the Run command and then re-enter a new Run command. • Set o2-02 to 0 to disable the STOP key.
Motor starting torque is too low.	*Refer to Motor Performance Fine-Tuning on page 392*.
Frequency reference value is too low or the drive does not accept the value entered.	Enter a value that is above the minimum output frequency determined by E1-09.
The sequence Start/Stop sequence is set up incorrectly.	• If the drive is supposed to be set up for a 2-wire sequence, then ensure parameters H1-03 through H1-08 are not set to 0. • If the drive is supposed to be set up for a 3-wire sequence, then one of the parameters H1-03 through H1-08 must be set to 0. Terminal S1 will become the Start, terminal S2 will become the Stop input.

■ Motor Rotates in the Opposite Direction from the Run Command

Cause	Possible Solutions
Phase wiring between the drive and motor is incorrect.	• Check the motor wiring. • Switch two motor cables (U, V, and W) to reverse motor direction. • Connect drive output terminals U/T1, V/T2, and W/T3 in the right order to match motor terminals U, V, and W. • Change the setting of parameter b1-14.
The forward direction for the motor is set up incorrectly.	Typically, forward is designated as being counterclockwise when looking from the motor shaft (see figure below). 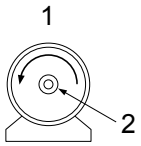 1. Forward Rotating Motor (looking down the motor shaft) 2. Motor Shaft
The motor is running at almost 0 Hz and the Speed Search estimated the speed to be in the opposite direction.	• Disable bi-directional search (b3-14 = 0) so that Speed Search is performed only in the specified direction.

Note: Check the motor specifications for the forward and reverse directions. The motor specifications will vary depending on the manufacturer of the motor.

■ Motor Rotates in One Direction Only

Cause	Possible Solutions
The drive prohibits reverse rotation.	• Check parameter b1-04. • Set parameter b1-04 to 0 to allow the motor to rotate in reverse.
A Reverse run signal has not been entered, although 3-Wire sequence is selected.	• Make sure that one of the input terminals S3 to S8 used for the 3-Wire sequence has been set for reverse.

◆ Motor is Too Hot

Cause	Possible Solutions
The load is too heavy.	If the load is too heavy for the motor, the motor will overheat as it exceeds its rated torque value for an extended period of time. Keep in mind that the motor also has a short-term overload rating in addition to the possible solutions provided below: • Reduce the load. • Increase the acceleration and deceleration times. • Check the values set for the motor protection (L1-01, L1-02) as well as the motor rated current (E2-01). • Increase motor capacity.
The air around the motor is too hot.	• Check the ambient temperature. • Cool the area until it is within the specified temperature range.
The drive is operating in a vector control mode but Auto-Tuning has not yet been performed.	• Perform Auto-Tuning. • Calculate the motor value and reset the motor parameters. • Change the motor control method to V/f Control (A1-02 = 0).

Cause	Possible Solutions
Insufficient voltage insulation between motor phases.	When the motor cable is long, high voltage surges occur between the motor coils and drive switching. Normally, surges can reach up to three times the drive input power supply voltage. • Use a motor with a voltage tolerance higher than the maximum voltage surge. • Use an inverter-duty motor rated for use with AC drives when using the motor on drives rated higher than 200 V class. • Install an AC reactor on the output side of the drive. The carrier frequency should be set to 2 kHz when installing an AC reactor.
The motor fan has stopped or is clogged.	Check the motor fan.
The carrier frequency is too low.	Increase the carrier frequency to lower the current harmonic distortion and lower the motor temperature.

◆ Drive Does Not Allow Selection of the Desired Auto-Tuning Mode

Cause	Possible Solutions
The desired Auto-Tuning mode is not available for the selected control mode.	• Check if the desired tuning mode is available for the selected control mode. ***Refer to Auto-Tuning on page 176***. • Change the motor control method by setting A1-02.

◆ oPE02 Error Occurs When Lowering the Motor Rated Current Setting

Cause	Possible Solutions
Motor rated current and the motor no-load current setting in the drive are incorrect.	• The user is trying to set the motor rated current in E2-01 to a value lower than the no-load current set in E2-03. • Make sure that value set in E2-01 is higher than E2-03. • If it is necessary to set E2-01 lower than E2-03, first lower the value set to E2-03, then change the setting in E2-01 as needed.

◆ Motor Stalls during Acceleration or Acceleration Time is Too Long

Cause	Possible Solutions
Torque limit has been reached or current suppression keeps the drive from accelerating.	Take the following steps to resolve the problem: • Reduce the load. • Increase motor capacity. **Note:** Although the drive has a Stall Prevention function and a Torque Compensation Limit function, accelerating too quickly or trying to drive an excessively large load can exceed the capabilities of the motor.
Load is too heavy.	
Torque limit is not set properly.	Check the torque limit setting.
Frequency reference is too low.	• Check the maximum output frequency (E1-04). • Increase E1-04 if it is set too low.
	Check U1-01 for proper frequency reference.
	Check if a frequency reference signal switch has been set to one of the multi-function input terminals.
	Check for low gain level set to terminals A1, A2, or A3 (H3-03, H3-11, H3-07).
Load is too heavy.	• Reduce the load so that the output current remains within the motor rated current. • In extruder and mixer applications, the load will sometimes increase as the temperature drops.
	• Increase the acceleration time. • Check if the mechanical brake is fully releasing as it should.
Acceleration time has been set too long.	Check if the acceleration time parameters have been set too long (C1-01, C1-03, C1-05, C1-07).
Motor characteristics and drive parameter settings are incompatible with one another.	• Set the correct V/f pattern so that it matches the characteristics of the motor being used. • Check the V/f pattern set to E1-03. • Execute Rotational Auto-Tuning.
Although the drive is operating in Open Loop Vector motor control method, Auto-Tuning has not been performed.	• Perform Auto-Tuning. • Calculate motor data and reset motor parameters. • Switch to V/f Control (A1-02 = 0).

Cause	Possible Solutions
Incorrect frequency reference setting.	• Check the multi-function analog input settings. Multi-function analog input terminal A1, A2, or A3 is set for frequency gain (H3-02, H3-10, or H3-06 is set to "1"), but there is no voltage or current input provided. • Make sure H3-02, H3-10, and H3-06 are set to the proper values. • See if the analog input value is set to the right value (U1-13 to U1-15).
The Stall Prevention level during acceleration and deceleration set too low.	• Check the Stall Prevention level during acceleration (L3-02). • If L3-02 is set too low, acceleration may be taking too long. • Increase L3-02.
The Stall Prevention level during run has been set too low.	• Check the Stall Prevention level during run (L3-06). • If L3-06 is set too low, speed will drop as the drive outputs torque. • Increase the setting value.
Drive reached the limitations of the V/f motor control method.	• The motor cable may be long enough (over 50 m) to require Auto-Tuning for line-to-line resistance. • Be aware that V/f Control is comparatively limited when it comes to producing torque at low speeds. • Consider switching to Open Loop Vector Control.

◆ Drive Frequency Reference Differs from the Controller Frequency Reference Command

Cause	Possible Solutions
The analog input gain and bias for the frequency reference input are set to incorrect values.	• Check the gain and bias settings for the analog inputs that are used to set the frequency reference. Check parameters H3-03 and H3-04 for input A1, check parameters H3-11, and H3-12 for input A2, and check parameters H3-07 and H3-08 for input A3. • Set these parameters to the appropriate values.
A frequency bias signal is being entered via analog input terminals A1 to A3.	• If more than one of multi-function analog inputs A1 to A3 is set for frequency reference bias (H3-02, H3-10, or H3-06 is set to "0"), then the sum of all signals builds the frequency reference. • Make sure that H3-02, H3-10, and H3-06 are set appropriately. • Check the input level set for terminals A1 to A3 (U1-13 to U1-15).
PID control is enabled, and the drive is consequently adjusting the output frequency to match the PID setpoint. The drive will only accelerate to the maximum output frequency set in E1-04 while PID control is active.	If PID control is not necessary for the application, disable it by setting b5-01 to 0.

◆ Excessive Motor Oscillation and Erratic Rotation

Cause	Possible Solutions
Poor balance between motor phases.	Check drive input power voltage to ensure that it provides stable power.
Hunting prevention function is disabled.	• Enable Hunting Prevention (n1-01 = 1). • Increase the AFR gain (n2-01) or the AFR time constant 1 (n2-02).

◆ Deceleration Takes Longer Than Expected with Dynamic Braking Enabled

Cause	Possible Solutions
L3-04 is set incorrectly.	• Check the Stall Prevention level during deceleration (L3-04). • If a dynamic braking option has been installed, disable Stall Prevention during deceleration (L3-04 = 0).
The deceleration time is set too long.	Set deceleration to more appropriate time (C1-02, C1-04, C1-06, C1-08).
Insufficient motor torque.	• Assuming parameter settings are normal and that no overvoltage occurs when there is insufficient torque, it is likely that the demand on the motor has exceeded the motor capacity. • Use a larger motor.

Cause	Possible Solutions
Reaching the torque limit.	• Check the settings for the torque limit (L7-01 through L7-04). • If the torque limit is enabled, deceleration might take longer than expected because the drive cannot output more torque than the limit setting. Ensure the torque limit is set to a high enough value. • Increase the torque limit setting.
	• If multi-function analog input terminal A1, A2, or A3 is set to torque limit (H3-02, H3-10, or H3-06 equals 10, 11, 12, or 15), ensure that the analog input levels are set to the correct levels. • Ensure H3-02, H3-10, and H3-06 are set to the right levels. • Ensure the analog input is set to the correct value (U1-13 to U1-15).
Load exceeded the internal torque limit determined by the drive rated current.	Switch to a larger capacity drive.

◆ Noise From Drive or Motor Cables When the Drive is Powered On

Cause	Possible Solutions
Relay switching in the drive generates excessive noise.	• Lower the carrier frequency (C6-02). • Install a noise filter on the input side of drive input power. • Install a noise filter on the output side of the drive. • Place the wiring inside a metal conduit to shield it from switching noise. • Ground the drive and motor properly. • Separate the main circuit wiring and the control lines. • Make sure wires and the motor have been properly grounded.

◆ Ground Fault Circuit Interrupter (GFCI) Trips During Run

Cause	Possible Solutions
Excessive leakage current trips GFCI.	• Check the wiring and rating of peripheral devices. • Increase the GFCI sensitivity or use GFCI with a higher threshold. • Lower the carrier frequency (C6-02). • Reduce the length of the cable used between the drive and the motor. • Disable the internal EMC filter.

◆ Connected Machinery Vibrates When Motor Rotates

■ Unexpected Noise from Connected Machinery

Cause	Possible Solutions
The carrier frequency is at the resonant frequency of the connected machinery.	Adjust the carrier frequency using parameters C6-02 through C6-05.
The drive output frequency is the same as the resonant frequency of the connected machinery.	• Adjust the parameters used for the Jump frequency function (d3-01 through d3-04) to skip the problem-causing bandwidth. • Place the motor on a rubber pad to reduce vibration.

Note: The drive may have trouble assessing the status of the load due to white noise generated from using Swing PWM (C6-02 = 7 to A).

■ Oscillation or Hunting

Cause	Possible Solutions
Insufficient tuning.	Perform Auto-Tuning. *Refer to Motor Performance Fine-Tuning on page 392*.
Gain is too low when using PID control.	*Refer to b5: PID Control on page 223* for details.
The frequency reference is assigned to an external source and the signal is noisy.	• Ensure that noise is not affecting the signal lines. • Separate main circuit wiring and control circuit wiring. • Use twisted-pair cables or shielded wiring for the control circuit. • Increase the analog input time filter constant (H3-13).
The cable between the drive and motor is too long.	• Perform Auto-Tuning. • Reduce the length of the cable.

◆ PID Output Fault

Cause	Possible Solutions
No PID feedback input.	• Check the multi-function analog input terminal settings. • Set multi-function analog input terminal A1, A2, or A3 for PID feedback (H3-02, H3-10, or H3-06 = B). • A signal input to the terminal selection for PID feedback is needed. • Check the connection of the feedback signal. • Check the various PID-related parameter settings. • No PID feedback input to the terminal causes the value detected to be 0, causing a PID fault and the drive to operate at max frequency.
The level of detection and the target value do not correspond with each other.	• PID control keeps the difference between target and detection values at 0. Set the input level for the values relative to one another. • Use analog input gains H3-03, H3-07, and H3-11 to adjust PID target and feedback signal scaling.
Reverse drive output frequency and speed detection. When output frequency rises, the sensor detects a speed decrease.	Set PID output for reverse characteristics (b5-09 = 1).
Adjustment made to PID parameter settings are insufficient.	*Refer to b5: PID Control on page 223* for details.

◆ Insufficient Starting Torque

Cause	Possible Solutions
Auto-Tuning has not yet been performed (required for vector control modes).	Perform Auto-Tuning. *Refer to Motor Performance Fine-Tuning on page 392*.
The control mode was changed after performing Auto-Tuning.	Perform Auto-Tuning again.
Only Stationary Auto-Tuning was performed.	Perform Rotational Auto-Tuning.

◆ Motor Rotates after the Drive Output is Shut Off (Motor Rotates During DC Injection Braking)

Cause	Possible Solutions
DC Injection Braking is set too low and the drive cannot decelerate properly.	• Adjust the DC Injection braking settings. • Increase the current level for DC Injection Braking Current (b2-02). • Increase the DC Injection Braking time at stop (b2-04).
The stopping method is set so that the drive coasts to stop.	Set b1-03 (Stopping Method Selection) to 0 or 2.

◆ Output Frequency is Not as High as Frequency Reference

Cause	Possible Solutions
Frequency reference is set within the range of the Jump Frequency.	• Adjust the parameters used for the Jump Frequency function (d3-01, d3-02, d3-03). • Enabling the Jump Frequency prevents the drive from outputting the frequencies specified in the Jump range.
Upper limit for the frequency reference has been exceeded.	• Set the maximum output frequency and the upper limit for the frequency reference to more appropriate values (E1-04, d2-01). • The following calculation yields the upper value for the output frequency: E1-04 x d2-01 / 100
Large load triggered Stall Prevention function during acceleration.	• Reduce the load. • Adjust the Stall Prevention level during acceleration (L3-02).
Motor runs at the following speed: b2-01 ≤ Motor speed < E1-09	• Set b1-21 (Start Condition Selection at Closed Loop Vector Control) to 1. • Set E1-09 (Minimum Output Frequency) to a value lower than the setting for b2-01 (DC Injection Braking Start Frequency).

◆ Sound from Motor

Cause	Possible Solutions
Exceeded 110% of the rated output current of the drive while operating at low speeds.	• If the output current rises too high at low speeds, the carrier frequency is automatically reduced and causes a whining or buzzing sound. • If the sound is coming from the motor, disable carrier frequency derating (L8-38 = 0). • Disabling the automatic carrier frequency derating increases the chances of an overload fault (oL2). Switch to a larger capacity motor if oL2 faults occur too frequently.

◆ Unstable Motor Speed when Using PM

Cause	Possible Solutions
The motor code for the PM motor (E5-01 or T2-02) is set incorrectly (Yaskawa motors only).	***Refer to Motor Performance Fine-Tuning on page 392*** for details.
Drive is attempting to operate the motor beyond the speed control range listed in the specifications.	Check the speed control range and adjust the speed accordingly.
Drive is attempting to operate the motor at 5% or less of the speed reference value.	Use alternative motor if the drive is attempting to operate the motor at 5% or less of the speed reference value.
Motor hunting occurs.	***Refer to Motor Performance Fine-Tuning on page 392*** for details.
Hunting occurs at start.	Increase the S-curve time at the start of acceleration (C2-01).
Too much current is flowing through the drive.	• Enter the correct motor code for the PM motor being used into E5-01. • For special-purpose motors, enter the correct data to all E5 parameters according to the test report provided for the motor.

◆ Motor Does Not Restart after Power Loss

Cause	Possible Solutions
The Run command was not issued again when power was restored.	• Check the sequence and wiring that has been set up to enter the Run command. • A relay should be set up to make sure the Run command remains enabled throughout any power loss.
The relay that is supposed to maintain the Run command has been switched off.	Check wiring and circuitry for the relay intended to keep the Run command enabled.

7

Periodic Inspection & Maintenance

This chapter describes the periodic inspection and maintenance of the drive to ensure that it receives the proper care to maintain overall performance.

7.1 SECTION SAFETY....458
7.2 INSPECTION....460
7.3 PERIODIC MAINTENANCE....463
7.4 DRIVE COOLING FANS....465
7.5 REPLACING THE AIR FILTER....491
7.6 DRIVE REPLACEMENT....493

7.1 Section Safety

⚠ WARNING

Electrical Shock Hazard

Do not connect or disconnect wiring while the power is on.

Failure to comply could result in death or serious injury.

Before servicing, disconnect all power to the equipment. The internal capacitor remains charged even after the power supply is turned off. The charge indicator LED will extinguish when the DC bus voltage is below 50 Vdc. To prevent electric shock, wait for at least the time specified on the warning label; after all indicators are OFF, measure for unsafe voltages to confirm the drive is safe prior to servicing.

Do not operate equipment with covers removed.

Failure to comply could result in death or serious injury.

The diagrams in this section may show drives without covers or safety shields to show details. Be sure to reinstall covers or shields before operating the drives and run the drives according to the instructions described in this manual.

Always ground the motor-side grounding terminal.

Improper equipment grounding could result in death or serious injury by contacting the motor case.

Do not remove covers or touch circuit boards while the power is on.

Failure to comply could result in death or serious injury.

Do not allow unqualified personnel to perform work on the drive.

Failure to comply could result in death or serious injury.

Installation, maintenance, inspection, and servicing must be performed only by authorized personnel familiar with installation, adjustment, and maintenance of AC drives.

Do not perform work on the drive while wearing loose clothing, jewelry or without eye protection.

Failure to comply could result in death or serious injury.

Remove all metal objects such as watches and rings, secure loose clothing, and wear eye protection before beginning work on the drive.

Do not touch any terminals before the capacitors have fully discharged.

Failure to comply could result in death or serious injury.

Before servicing, disconnect all power to the equipment. The internal capacitor remains charged even after the power supply is turned off. The charge indicator LED will extinguish when the DC bus voltage is below 50 Vdc. To prevent electric shock, wait for at least the time specified on the warning label; after all indicators are OFF, measure the DC bus voltage level to confirm it has reached a safe level.

Fire Hazard

Tighten all terminal screws to the specified tightening torque.

Loose electrical connections could result in death or serious injury by fire due to overheating of electrical connections.

Do not use an improper voltage source.

Failure to comply could result in death or serious injury by fire.

Verify that the rated voltage of the drive matches the voltage of the incoming power supply before applying power.

Do not use improper combustible materials.

Failure to comply could result in death or serious injury by fire.

Attach the drive to metal or other noncombustible material.

NOTICE

Observe proper electrostatic discharge procedures (ESD) when handling the drive and circuit boards.

Failure to comply may result in ESD damage to the drive circuitry.

Follow cooling fan replacement instructions. The cooling fan cannot operate properly when it is installed incorrectly and could seriously damage the drive.

Follow the instructions in this manual to replace the cooling fan, making sure that the label is on top before inserting the cooling fan into the drive. To ensure maximum useful product life, replace both cooling fans when performing maintenance.

Never connect or disconnect the motor from the drive while the drive is outputting voltage.

Improper equipment sequencing could result in damage to the drive.

Do not use unshielded cable for control wiring.

Failure to comply may cause electrical interference resulting in poor system performance. Use shielded, twisted-pair wires and ground the shield to the ground terminal of the drive.

Do not allow unqualified personnel to use the product.

Failure to comply could result in damage to the drive or braking circuit.

Maintenance, inspection, and replacement of parts must be performed only by authorized personnel familiar with installation, adjustment and maintenance of AC drives.

Do not modify the drive circuitry.

Failure to comply could result in damage to the drive and will void warranty.

Yaskawa is not responsible for any modification of the product made by the user. This product must not be modified.

Check all the wiring to ensure that all connections are correct after installing the drive and connecting any other devices.

Failure to comply could result in damage to the drive.

Comply with proper wiring practices.

The motor may run in reverse if the phase order is backward.

Connect motor input terminals U, V and W to drive output terminals U/T1, V/T2, and W/T3. The phase order for the drive and motor should match.

Frequently switching the drive power supply to stop and start the motor can damage the drive.

To get the full performance life out of the electrolytic capacitors and circuit relays, refrain from switching the drive power supply off and on more than once every 30 minutes. Frequent use can damage the drive. Use the drive to stop and start the motor.

Do not operate damaged equipment.

Failure to comply could result in further damage to the equipment.

Do not connect or operate any equipment with visible damage or missing parts.

7.2 Inspection

Power electronics have limited life and may exhibit changes in characteristics or performance deterioration after years of use under normal conditions. To help avoid such problems, it is important to perform preventive maintenance and periodic inspection on the drive.

Drives contain a variety of power electronics such as power transistors, semiconductors, capacitors, resistors, fans, and relays. The electronics in the drive serve a critical role in maintaining proper motor control.

Follow the inspection lists provided in this chapter as a part of a regular maintenance program.

Note: The drive will require more frequent inspection if it is placed in harsh environments, such as:
- High ambient temperatures
- Frequent starting and stopping
- Fluctuations in the AC supply or load
- Excessive vibrations or shock loading
- Dust, metal dust, salt, sulfuric acid, chlorine atmospheres
- Poor storage conditions.

Perform the first equipment inspection one to two years after installation.

◆ Recommended Daily Inspection

Table 7.1 outlines the recommended daily inspection for Yaskawa drives. Check the following items on a daily basis to avoid premature deterioration in performance or product failure. Copy this checklist and mark the "Checked" column after each inspection.

Table 7.1 General Recommended Daily Inspection Checklist

Inspection Category	Inspection Points	Corrective Action	Checked
Motor	Inspect for abnormal oscillation or noise coming from the motor.	• Check the load coupling. • Measure motor vibration. • Tighten all loose components.	
Cooling	Inspect for abnormal heat generated from the drive or motor and visible discoloration.	Check for the following: • Excessive load. • Loose connections. • Dirty heatsink or motor. • Ambient temperature.	
	Inspect drive cooling fan and circulation fan operation.	Check for the following: • Clogged or dirty fan. • Correct Fan operation parameter setting.	
Environment	Verify the drive environment complies with the specifications listed in *Installation Environment* on page *54*.	Eliminate the source of contaminants or correct poor environment.	
Load	The drive output current should not be higher than the motor or drive rating for an extended period of time.	Check for the following: • Excessive load. • Correct motor parameter settings.	
Power Supply Voltage	Check main power supply and control voltages.	• Correct the voltage or power supply to within nameplate specifications. • Verify all main circuit phases.	

◆ Recommended Periodic Inspection

Table 7.2 outlines the recommended periodic inspections for Yaskawa drive installations. Although periodic inspections should generally be performed once a year; the drive may require more frequent inspection in harsh environments or with rigorous use. Operating and environmental conditions, along with experience in each application, will determine the actual inspection frequency for each installation. Periodic inspection will help to avoid premature deterioration in performance or product failure. Copy this checklist and mark the "Checked" column after each inspection.

■ Periodic Inspection

WARNING! *Electrical Shock Hazard. Do not inspect, connect, or disconnect any wiring while the power is on. Failure to comply can result in serious personal injury. Before servicing, disconnect all power to the equipment. The internal capacitor remains charged even after the power supply is turned off. The charge indicator LED will extinguish when the DC bus voltage is below 50 Vdc. To prevent electric shock, wait for at least the time specified on the warning label; after all indicators are OFF, measure for unsafe voltages to confirm the drive is safe prior to servicing.*

Table 7.2 Periodic Inspection Checklist

Inspection Area	Inspection Points	Corrective Action	Checked
Main Circuit Periodic Inspection			
General	• Inspect equipment for discoloration from overheating or deterioration. • Inspect for damaged or deformed parts.	• Replace damaged components as required. • The drive has few serviceable parts and may require complete drive replacement.	
	Inspect for dirt, foreign particles, or dust collection on components.	• Inspect enclosure door seal if used. • Remove foreign particles and dust with a vacuum cleaner to avoid touching parts. • Replace components if cleaning is not possible.	
Conductors and Wiring	• Inspect wiring and connections for discoloration, damage, or heat stress. • Inspect wire insulation and shielding for wear.	Repair or replace damaged wiring.	
Terminals	Inspect terminals for stripped, damaged, or loose connections.	Tighten loose screws and replace damaged screws or terminals.	
Relays and Contactors	• Inspect contactors and relays for excessive noise during operation. • Inspect coils for signs of overheating such as melted or cracked insulation.	• Check coil voltage for overvoltage or undervoltage conditions. • Replace damaged removable relays, contactors, or circuit board.	
Electrolytic Capacitor	• Inspect for leaking, discoloration, or cracks. • Check if the cap has come off, for any swelling, or if the sides have burst open.	The drive has few serviceable parts and may require complete drive replacement.	
Diode, IGBT (Power Transistor)	Inspect for dust or other foreign material collected on the surface.	Remove foreign particles and dust with a vacuum cleaner to avoid touching parts.	
Motor Periodic Inspection			
Operation Check	Check for increased vibration or abnormal noise.	Stop the motor and contact qualified maintenance personnel as required.	
Control Circuit Periodic Inspection			
General	• Inspect terminals for stripped, damaged, or loose connections. • Make sure all terminals have been properly tightened.	• Tighten loose screws and replace damaged screws or terminals. • If terminals are integral to a circuit board, then board or drive replacement may be required.	
Circuit Boards	Check for any odor, discoloration, and rust. Make sure connections are properly fastened and that no dust or oil mist has accumulated on the surface of the board.	• Fix any loose connections. • If an antistatic cloth or vacuum plunger cannot be used, replace the board. • Do not use any solvents to clean the board. • Remove foreign particles and dust with a vacuum cleaner to avoid touching parts. The drive has few serviceable parts and may require complete drive replacement.	
Cooling System Periodic Inspection			
Cooling Fan, Circulation Fan, Control Board Cooling Fan	• Check for abnormal oscillation or unusual noise. • Check for damaged or missing fan blades.	• Replace as required. • *Refer to Drive Cooling Fans on page 465* for information on cleaning or replacing the fan.	
Heatsink	Inspect for dust or other foreign material collected on the surface.	Remove foreign particles and dust with a vacuum cleaner to avoid touching parts.	

Inspection Area	Inspection Points	Corrective Action	Checked
Air Duct	Inspect air intake and exhaust openings. They must be free from obstruction and properly installed.	• Visually inspect the area. • Clear obstructions and clean air duct as required.	
Display Periodic Inspection			
Digital Operator	• Make sure data appears on the display properly. • Inspect for dust or other foreign material that may have collected on surrounding components.	• Contact the nearest sales office if there is any trouble with the display or keypad. • Clean the digital operator.	

◆ Storage Guidelines

The drive contains electrolytic capacitors and fine electronic parts that undergo chemical changes. Observe the following precautions to help maintain the expected performance life and reliability during long-term storage.

■ Storage Location

Temperature and Humidity

Store the drive in a location that is between -10 and +40 °C with a relative humidity of 95% or less. Do not store the drive in direct sunlight or where condensation or ice will form.

Storage temperatures between -20 to +60 °C are allowed when storing the drive for approximately one month.

Note: Package and store the drive during shipping to protect it from vibration and shock.

Dust and Oil Mist

Do not store the drive in a dusty location or a location subject to oil mist.

Corrosive Gas

Do not store the drive in a location subject to corrosive gas.

Salt Damage

Do not store the drive in a location subject to salt damage, such as near the ocean.

Do not store the drive in adverse environments. Store all drives in storage rooms that are not subjected to adverse environmental elements.

Periodic Power Application

Yaskawa recommends applying power to the drive once per year for at least 30 minutes to prevent the capacitors from deteriorating.

When applying power after power has not been applied for more than two years, Yaskawa recommends using a variable power source and gradually increasing the power from 0 V to the rated drive voltage over a period of 2 to 3 minutes. Apply power for at least 1 hour with no load to age the main circuit electrolytic capacitor.

Wire the drive normally and check for drive faults, overcurrents, motor vibration, speed fluctuations, and other abnormalities during operation after performing the above procedure.

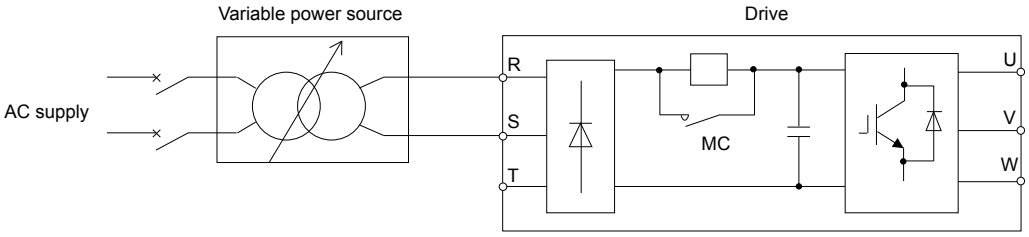

Figure 7.1 Power Distribution Method

7.3 Periodic Maintenance

The drive has Maintenance Monitors that keep track of component wear. This feature provides advance maintenance warning and eliminates the need to shut down the entire system for unexpected problems. The drive allows the user to check predicted maintenance periods for the components listed below.

- Cooling Fan, Circulation Fan, Control Board Cooling Fan
- Electrolytic Capacitors
- Inrush Prevention Circuit
- IGBTs

For replacement parts, contact the distributor where the drive was purchased or contact Yaskawa directly.

◆ Replacement Parts

Table 7.3 contains the estimated performance life of components that require replacement during the life of the drive. Only use Yaskawa replacement parts for the appropriate drive model and revision.

Table 7.3 Estimated Performance Life

Component	Estimated Performance Life
Cooling Fan, Circulation Fan	10 years
Electrolytic Capacitors	10 years <1>

<1> Electrolytic capacitors cannot be replaced on some lower capacity models. Complete drive replacement may be required for these models.

NOTICE: *Estimated performance life based on specific usage conditions. These conditions are provided for the purpose of replacing parts to maintain performance. Some parts may require more frequent replacement due to poor environments or rigorous use.*
Usage conditions for estimated performance life:
Ambient temperature: Yearly average of 40 °C (IP20/IP00 enclosure)
Yearly average of 30 °C (side-by-side mounting/NEMA 1, UL type 1 enclosure drive or external heatsink installation)

■ Performance Life Monitors Maintenance Monitors

The drive calculates the maintenance period for components that may require replacement during the life of the drive. A percentage of the maintenance period is displayed on the digital operator by viewing the appropriate monitor parameter.

When the maintenance period reaches 100%, there is increased risk that the drive may malfunction. Yaskawa recommends checking the maintenance period regularly to ensure maximum performance life.

Set parameters L8-12 (Ambient Temperature Setting) and L8-35 (Installation Method Selection) for use with the installation environment when using maintenance monitors.

Refer to Recommended Periodic Inspection on page 461 for details.

Table 7.4 Performance Life Monitors Used for Component Replacement

Parameter	Component	Contents
U4-03	Cooling Fan Circulation Fan Control Board Cooling Fan	Displays the accumulated operation time of the fan from 0 to 99999 hours. This value is automatically reset to 0 after it reaches 99999.
U4-04		Displays the accumulated fan operation time as a percentage of the specified maintenance period.
U4-05	DC Bus Capacitors	Displays the accumulated time the capacitors are used as a percentage of the specified maintenance period.
U4-06	Pre-charge Circuit	Displays the number of times the drive is powered up as a percentage of the performance life of the inrush circuit.
U4-07	IGBT	Displays the percentage of the maintenance period reached by the IGBTs.

■ Alarm Outputs for Maintenance Monitors

An output can be set up to inform the user when a specific components has neared its expected performance life.

When one of multi-function digital output terminals has been assigned the maintenance monitor function (H2-□□ = 2F), the terminal will close when the cooling fan, DC bus capacitors, or DC bus pre-charge relay reach 90% of the expected performance life, or when the IGBTs have reached 50% of their expected performance life. Additionally the digital operator will display an alarm like shown in *Table 7.5* to indicate the specific components that may need maintenance.

Table 7.5 Maintenance Alarms

Digital Operator Alarm Display		Function	Corrective Action
LT-1 <1>	LT-1	The cooling fans have reached 90% of their designated life time.	Replace the cooling fan.
LT-2 <1>	LT-2	The DC bus capacitors have reached 90% of their designated life time.	Contact a Yaskawa representative or the nearest Yaskawa sales office on possible drive replacement.
LT-3 <1>	LT-3	The pre-charge circuit has reached 90% of its designated life time.	Contact a Yaskawa representative or the nearest Yaskawa sales office on possible drive replacement.
LT-4 <1>	LT-4	The IGBTs have reached 50% of their designated life time.	Check the load, carrier frequency, and output frequency.
TrPC <2>	TrPC	The IGBTs have reached 90% of their designated life time.	Contact a Yaskawa representative or the nearest Yaskawa sales office on possible drive replacement.

<1> This alarm message will be output only if the Maintenance Monitor function is assigned to one of the digital outputs (H2-□□ = 2F). The alarm will also trigger a digital output that is programmed for alarm indication (H2-□□ = 10).

<2> This alarm message will always be output, even if the Maintenance Monitor function is not assigned to any of the digital outputs (H2-□□ = 2F). The alarm will also trigger a digital output that is programmed for alarm indication (H2-□□ = 10).

■ Related Drive Parameters

Use parameters o4-03, o4-05, o4-07, and o4-09 to reset a Maintenance Monitor to zero after replacing a specific component. *Refer to Parameter List on page 555* for details on parameter settings.

NOTICE: *If these parameters are not reset after the corresponding parts have been replaced, the Maintenance Monitor function will continue to count down the performance life from the value that was reached with the old part. If the Maintenance Monitor is not reset, the drive will not have the correct value of the performance life for the new component.*

7.4 Drive Cooling Fans

NOTICE: *Follow cooling fan replacement instructions. The cooling fan cannot operate properly when installed incorrectly and could seriously damage the drive. To ensure maximum useful product life, replace all cooling fans when performing maintenance.*

Contact Yaskawa or a Yaskawa representative to order replacement cooling fans as required.

For drives with multiple cooling fans, replace all the fans when performing maintenance to ensure maximum product performance life.

◆ Number of Cooling Fans

Drive Model	Cooling Fans	Circulation Fans	Control Board Cooling Fans	Page
Three-Phase 200 V Class				
2A0004	–	–	–	–
2A0006	–	–	–	–
2A0008	–	–	–	–
2A0010	–	–	–	–
2A0012	–	–	–	–
2A0018	1	–	–	469
2A0021	1	–	–	
2A0030	2	–	–	
2A0040	2	–	–	
2A0056	2	–	–	
2A0069	2	–	–	
2A0081	2	–	–	
2A0110	2	–	–	471
2A0138	2	–	–	
2A0169	2	–	–	475
2A0211	2	–	–	
2A0250	2	–	–	
2A0312	2	–	–	
2A0360	3	1	–	
2A0415	3	1	–	
Three-Phase 400 V Class				
4A0002	–	–	–	–
4A0004	–	–	–	–
4A0005	–	–	–	–
4A0007	1	–	–	469
4A0009	1	–	–	
4A0011	1	–	–	
4A0018	2	–	–	
4A0023	2	–	–	
4A0031	2	–	–	
4A0038	2	–	–	
4A0044	2	–	–	
4A0058	2	–	–	471
4A0072	2	–	–	
4A0088	2	–	–	473
4A0103	2	–	–	

Drive Model	Cooling Fans	Circulation Fans	Control Board Cooling Fans	Page
4A0139	2	–	–	475
4A0165	2	–	–	
4A0208	2	–	–	
4A0250	3	–	–	
4A0296	3	–	–	
4A0362	3	1	–	
4A0414	3	1	–	479
4A0515	3	2	2	481
4A0675	3	2	2	
4A0930	6	4	4	485
4A1200	6	4	4	
Three-Phase 600 V Class				
5A0003	–	–	–	–
5A0004	–	–	–	–
5A0006	1	–	–	469
5A0009	1	–	–	
5A0011	2	–	–	
5A0017	2	–	–	
5A0022	2	–	–	
5A0027	2	–	–	
5A0032	2	–	–	
5A0041	2	–	–	471
5A0052	2	–	–	
5A0062	2	–	–	475
5A0077	2	–	–	
5A0099	2	–	–	
5A0125	2	–	–	
5A0145	2	–	–	
5A0192	3	–	–	
5A0242	3	1	–	

◆ Cooling Fan Component Names

WARNING! *Electrical Shock Hazard. Do not connect or disconnect wiring while the power is on. Failure to comply can result in serious personal injury. Before servicing the drive, disconnect all power to the equipment. The internal capacitor remains charged even after the power supply is turned off. After shutting off the power, wait for at least the amount of time specified on the drive before touching any components.*

CAUTION! *Burn Hazard. Do not touch a hot drive heatsink. Failure to comply could result in minor or moderate injury. Shut off the power to the drive when replacing the cooling fan. To prevent burns, wait at least 15 minutes and ensure the heatsink has cooled down.*

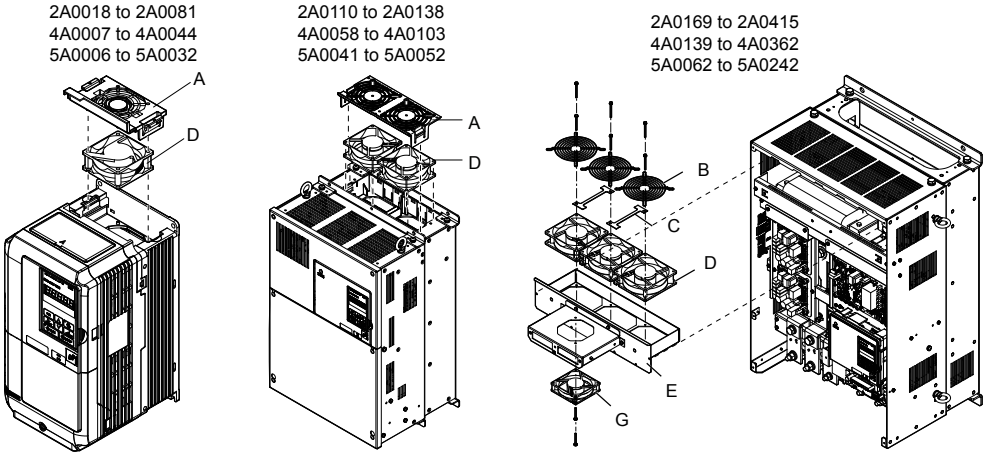

Figure 7.2 Cooling Fan Component Names

Remaining models can be found on the following page.

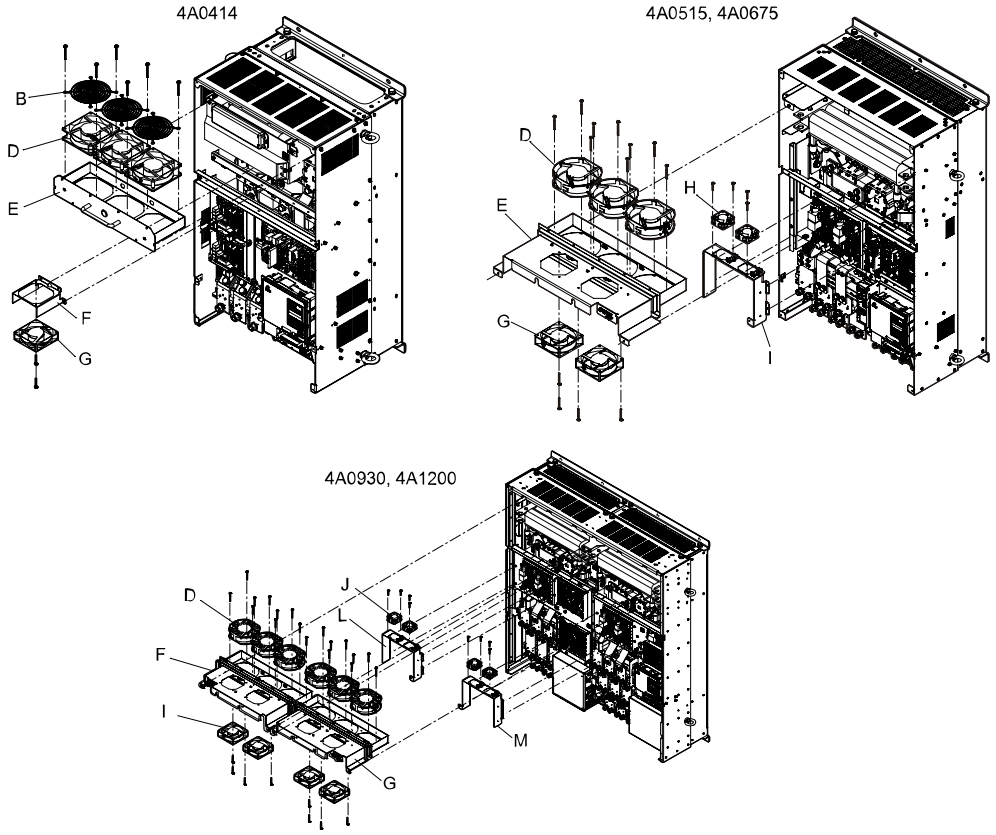

A – Fan finger guard
B – Fan guard
C – Cable cover
D – Cooling fan
E – Fan bracket
F – Circulation fan base
G – Circulation fan
H – Circuit board cooling fan
I – Circuit board cooling fan unit case

Figure 7.3 Cooling Fan Component Names (Continued)

◆ Cooling Fan Replacement: 2A0018 to 2A0081, 4A0007 to 4A0044, and 5A0006 to 5A0032

WARNING! *Electrical Shock Hazard. Do not connect or disconnect wiring while the power is on. Failure to comply can result in serious personal injury. Before servicing the drive, disconnect all power to the equipment. The internal capacitor remains charged even after the power supply is turned off. After shutting off the power, wait for at least the amount of time specified on the drive before touching any components.*

CAUTION! *Burn Hazard. Do not touch a hot drive heatsink. Failure to comply could result in minor or moderate injury. Shut off the power to the drive when replacing the cooling fan. To prevent burns, wait at least 15 minutes and ensure the heatsink has cooled down.*

NOTICE: *Follow cooling fan replacement instructions. Improper fan replacement could cause damage to equipment. Make sure the fan is facing upwards when installing the replacement fan into the drive. Replace all fans when performing maintenance to help ensure maximum useful product life.*

■ Removing the Cooling Fan Finger Guard and Cooling Fan

1. Depress the right and left sides of the fan cover tabs and pull upward. Remove the fan cover from the top of the drive. The following figure illustrates a drive with a single cooling fan.

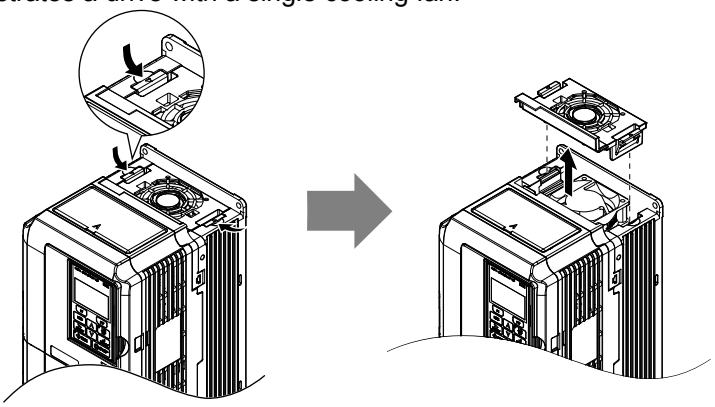

Figure 7.4 Remove the Cooling Fan Finger Guard: 2A0018 to 2A0081, 4A0007 to 4A0044, and 5A0006 to 5A0032

2. Remove the cooling fan cartridge. Disconnect the pluggable connector and remove the fan.

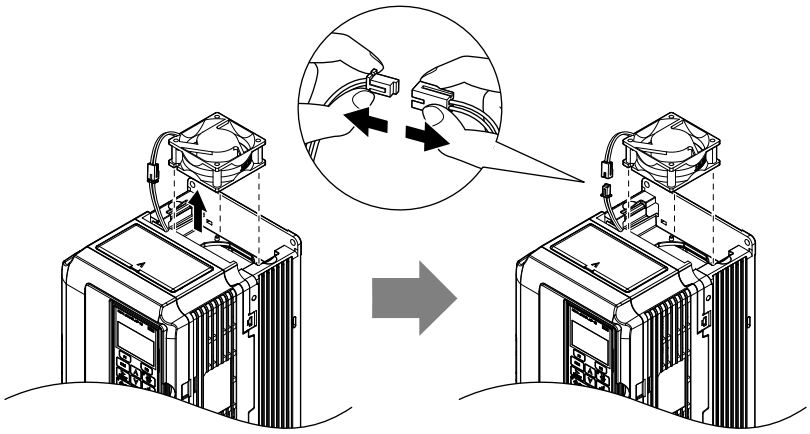

Figure 7.5 Remove the Cooling Fan: 2A0018 to 2A0081, 4A0007 to 4A0044, and 5A0006 to 5A0032

■ Installing the Cooling Fan

NOTICE: *Prevent Equipment Damage. Follow cooling fan replacement instructions. Improper cooling fan replacement could result in damage to equipment. When installing the replacement cooling fan into the drive, make sure the fan is facing upwards. To ensure maximum useful product life, replace all cooling fans when performing maintenance.*

Reverse the procedure described above to reinstall the cooling fan.

1. Install the replacement cooling fan into the drive, ensuring the alignment pins line up as shown in the figure below.

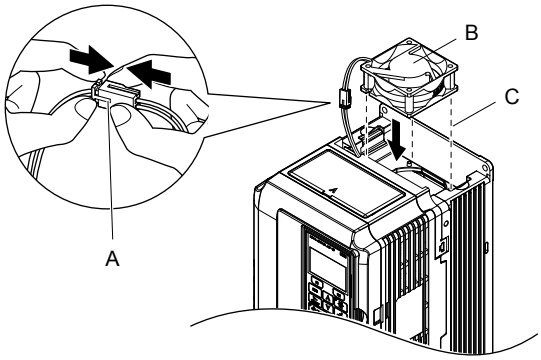

A – Push the connectors together so no space remains between them
B – Label facing up
C – Make sure the alignment pins line up properly

Figure 7.6 Install the Cooling Fan: 2A0018 to 2A0081, 4A0007 to 4A0044, and 5A0006 to 5A0032

2. Properly connect the fan power lines, then place the cable back into the recess of the drive.

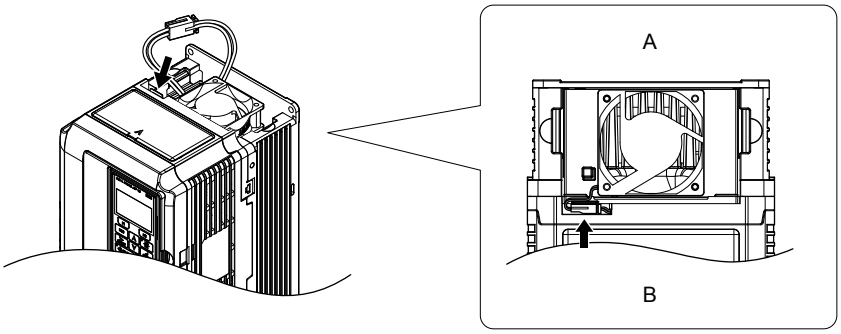

A – Back
B – Front

Figure 7.7 Connect the Cooling Fan Power Supply Connectors: 2A0018 to 2A0081, 4A0007 to 4A0044, and 5A0006 to 5A0032

3. While pressing in on the hooks on the left and right sides of the fan finger guard, guide the fan finger guard until it clicks back into place.

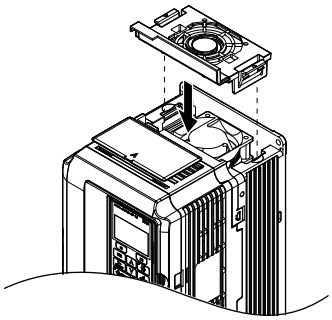

Figure 7.8 Reattach the Fan Finger Guard: 2A0018 to 2A0081, 4A0007 to 4A0044, and 5A0006 to 5A0032

4. Turn on the power supply and set o4-03 to 0 to reset the Maintenance Monitor cooling fan operation time.

◆ Cooling Fan Replacement: 2A0110, 2A0138, 4A0058, 4A0072, 5A0041, and 5A0052

These models allow access to the fans from the back or top of the drive for fan replacement. The drive can also be dismounted to replace the fans.

WARNING! *Electrical Shock Hazard. Do not connect or disconnect wiring while the power is on. Failure to comply can result in serious personal injury. Before servicing the drive, disconnect all power to the equipment. The internal capacitor remains charged even after the power supply is turned off. After shutting off the power, wait for at least the amount of time specified on the drive before touching any components.*

CAUTION! *Burn Hazard. Do not touch a hot drive heatsink. Failure to comply could result in minor or moderate injury. Shut off the power to the drive when replacing the cooling fan. To prevent burns, wait at least 15 minutes and ensure the heatsink has cooled down.*

NOTICE: *Follow cooling fan replacement instructions. Improper fan replacement could cause damage to equipment. Make sure the fan is facing upwards when installing the replacement fan into the drive. Replace all fans when performing maintenance to help ensure maximum useful product life.*

NOTICE: *When dismounting Flange Type Enclosure (NEMA 12 Backside) drives, ensure that the gasket of the mounting flange is not damaged. If the gasket is damaged, contact a Yaskawa representative or the nearest Yaskawa sales office for replacement gasket.* ***Refer to Gasket Replacement for Flange Type Enclosure (NEMA 12 Backside) Drives on page 490*** *for gasket replacement parts and procedures.*

■ Removing the Cooling Fan Finger Guard and Cooling Fan

1. While pressing in on the hooks located on the left and right sides of the fan finger guard, free the fan finger guard leading by lifting the back end first.

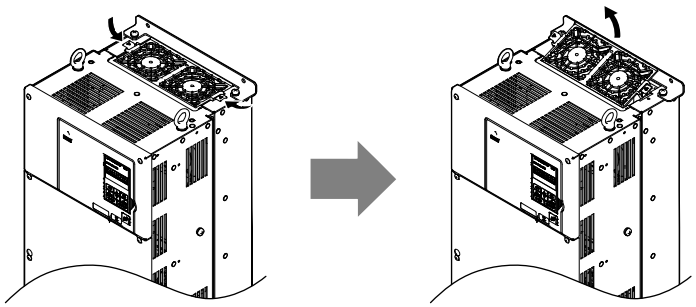

Figure 7.9 Remove the Cooling Fan Finger Guard: 2A0110, 2A0138, 4A0058, 4A0072, 5A0041, and 5A0052

2. Lift out the back end of the fan finger guard first. Unplug the replay connector and free the fan finger guard from the drive.

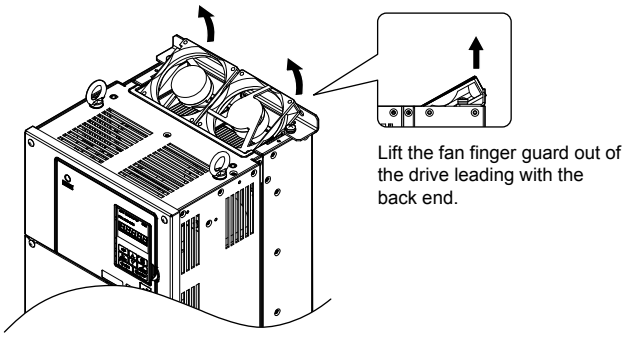

Figure 7.10 Remove the Cooling Fan: 2A0110, 2A0138, 4A0058, 4A0072, 5A0041, and 5A0052

■ Installing the Cooling Fan

Reverse the procedure described above to reinstall the cooling fan.

1. Properly connect the fan power lines.
2. Place the power supply connectors and cable back into the recess of the drive.

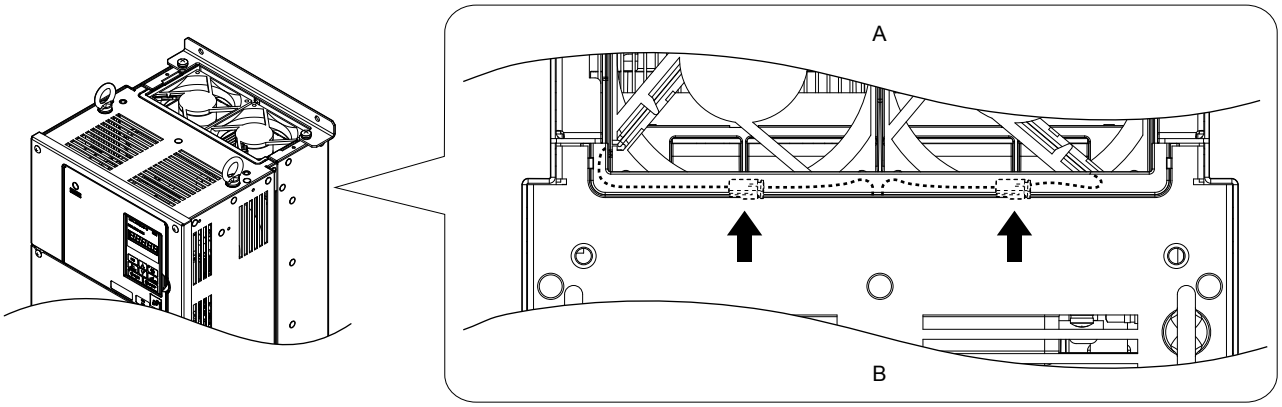

A – Back **B – Front**

Figure 7.11 Cooling Fan Power Supply Connectors: 2A0110, 2A0138, 4A0058, 4A0072, 5A0041, and 5A0052

3. Install the replacement fan into the drive.

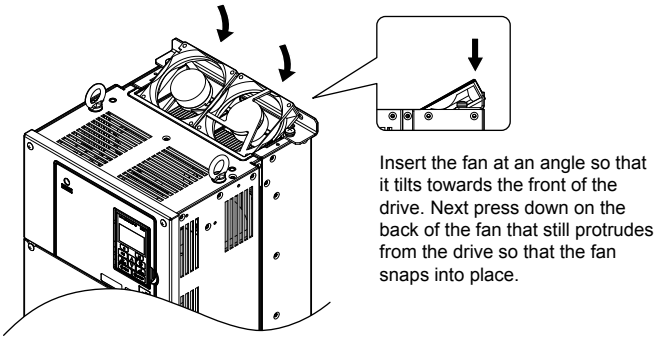

Figure 7.12 Install the Cooling Fan: 2A0110, 2A0138, 4A0058, 4A0072, 5A0041, and 5A0052

4. Tilt up the back end of the fan finger guard and slide the fan finger guard into the opening near the front of the drive, then guide the fan finger guard into place.

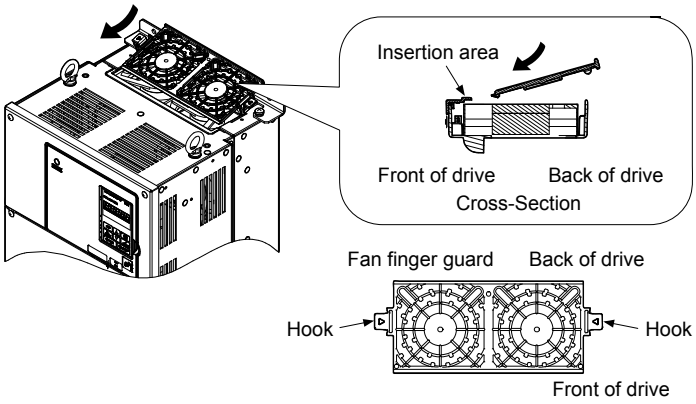

Figure 7.13 Reattach the Fan Cover: 2A0110, 2A0138, 4A0058, 4A0072, 5A0041, and 5A0052

5. Press in on the hooks of the left and right sides of the fan cover and guide the fan finger guard until it clicks into place.

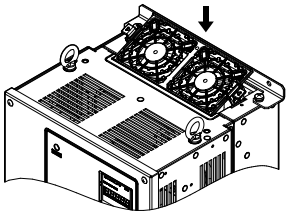

Figure 7.14 Reattach the Fan Finger Guard: 2A0110, 2A0138, 4A0058, 4A0072, 5A0041, and 5A0052

6. Turn on the power supply and set o4-03 to 0 to reset the Maintenance Monitor cooling fan operation time.

◆ Cooling Fan Replacement: 4A0088 and 4A0103

These models allow access to the fans from the back or top of the drive for fan replacement. The drive can also be dismounted to replace the fans.

WARNING! *Electrical Shock Hazard. Do not connect or disconnect wiring while the power is on. Failure to comply can result in serious personal injury. Before servicing the drive, disconnect all power to the equipment. The internal capacitor remains charged even after the power supply is turned off. After shutting off the power, wait for at least the amount of time specified on the drive before touching any components.*

CAUTION! *Burn Hazard. Do not touch a hot drive heatsink. Failure to comply could result in minor or moderate injury. Shut off the power to the drive when replacing the cooling fan. To prevent burns, wait at least 15 minutes and ensure the heatsink has cooled down.*

NOTICE: *Follow cooling fan replacement instructions. Improper fan replacement could cause damage to equipment. Make sure the fan is facing upwards when installing the replacement fan into the drive. Replace all fans when performing maintenance to help ensure maximum useful product life.*

NOTICE: *When dismounting Flange Type Enclosure (NEMA 12 Backside) drives, ensure that the gasket of the mounting flange is not damaged. If the gasket is damaged, contact a Yaskawa representative or the nearest Yaskawa sales office for replacement gasket.* ***Refer to Gasket Replacement for Flange Type Enclosure (NEMA 12 Backside) Drives on page 490*** *for gasket replacement parts and procedures.*

■ Removing the Cooling Fan Finger Guard and Cooling Fan

1. While pressing in on the hooks located on the left and right sides of the fan finger guard, free the fan finger guard by lifting the back end first.

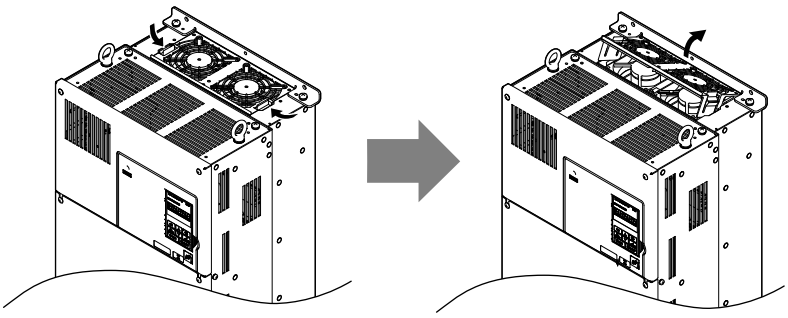

Figure 7.15 Remove the Cooling Fan Finger Guard: 4A0088 and 4A0103

2. Lift up directly on the cooling fan as shown in ***Figure 7.16***. Unplug the relay connector and release the fan from the drive.

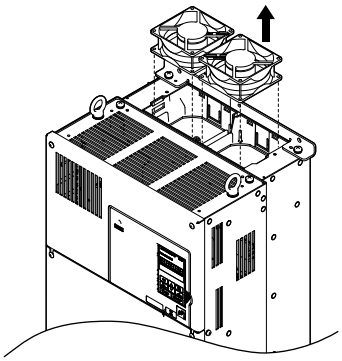

Figure 7.16 Remove the Cooling Fan: 4A0088 and 4A0103

■ Installing the Cooling Fan

Reverse the procedure describe above to reinstall the cooling fan.

1. Install the replacement fan into the drive. Align the pins as shown in *Figure 7.17*.

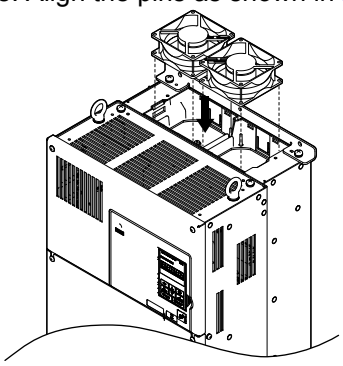

Figure 7.17 Install the Cooling Fan: 4A0088 and 4A0103

2. Properly connect the fan power lines then replace the power supply connectors and cables into the recess of the drive.

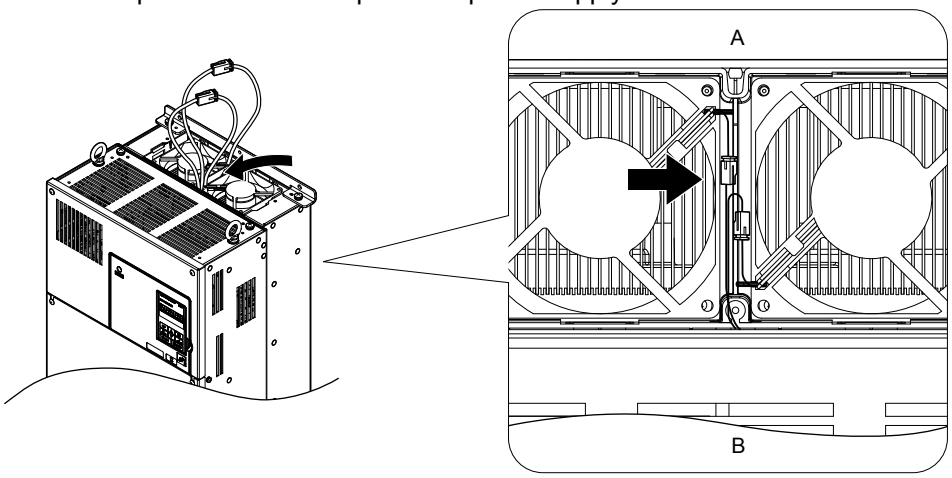

A – Back **B – Front**

Figure 7.18 Cooling Fan Power Supply Connectors: 4A0088 and 4A0103

3. Angle the fan finger guard as shown in *Figure 7.19* and insert the connector tabs into the corresponding holes on the drive.

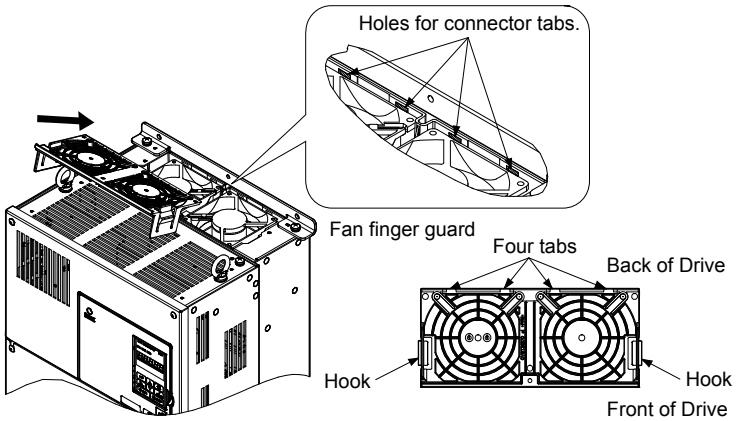

Figure 7.19 Reattach the Fan Finger Guard: 4A0088 and 4A0103

4. While pressing in on the hooks of the left and right sides of the fan finger guard, guide the fan finger guard until it clicks back into place.

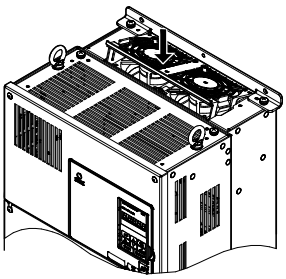

Figure 7.20 Reattach the Fan Finger Guard: 4A0088 and 4A0103

5. Turn on the power supply and set o4-03 to 0 to reset the Maintenance Monitor cooling fan operation time.

◆ Cooling Fan Replacement: 2A0169 to 2A0415, 4A0139 to 4A0362, and 5A0062 to 5A0242

These models allow access to the fans from the front of the drive for fan replacement.

WARNING! *Electrical Shock Hazard. Do not connect or disconnect wiring while the power is on. Failure to comply can result in serious personal injury. Before servicing the drive, disconnect all power to the equipment. The internal capacitor remains charged even after the power supply is turned off. After shutting off the power, wait for at least the amount of time specified on the drive before touching any components.*

CAUTION! *Burn Hazard. Do not touch a hot drive heatsink. Failure to comply could result in minor or moderate injury. Shut off the power to the drive when replacing the cooling fan. To prevent burns, wait at least 15 minutes and ensure the heatsink has cooled down.*

NOTICE: *Follow cooling fan and circulation fan replacement instructions. Improper fan replacement may cause damage to equipment. When installing the replacement fan into the drive, make sure the fan is facing upwards. Replace all fans when performing maintenance to help ensure maximum useful product life.*

NOTICE: *When dismounting the fan bracket sub-assembly on Flange Type Enclosure (NEMA 12 Backside) drives, ensure that the gasket attached to the mounting surface of the fan bracket is not damaged. If the gasket is damaged, contact a Yaskawa representative or the nearest Yaskawa sales office for replacement gasket.* ***Refer to Gasket Replacement for Flange Type Enclosure (NEMA 12 Backside) Drives on page 490*** *for gasket replacement parts and procedures.*

■ Removing and Disassembling the Cooling Fan Unit

1. Remove the terminal cover and front cover.
2. Remove the fan connector (CN6).

   Remove the fan connectors (CN6, CN7) in models 2A0360, 2A0415, 4A0362, and 5A0242.

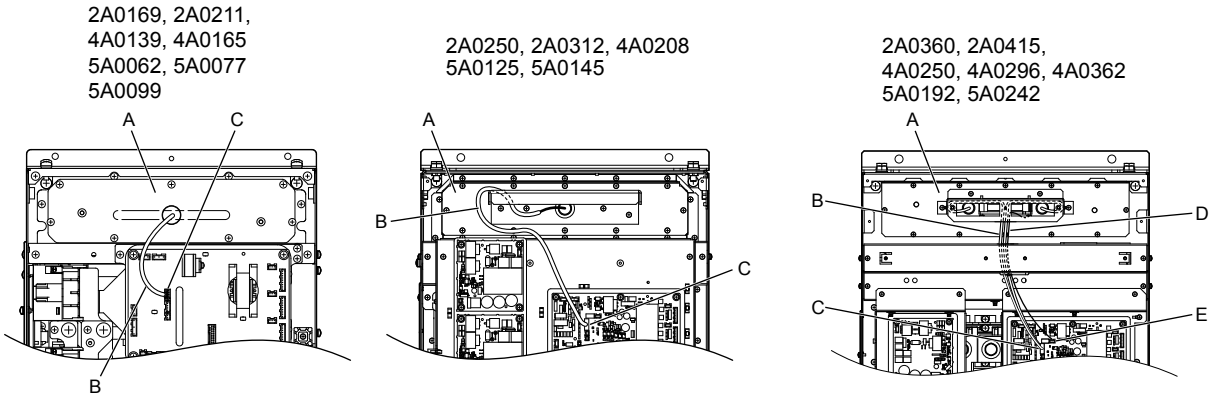

A – Fan unit
B – Fan relay cable
C – Fan connector (CN6)
D – Circulation fan relay cable
E – Fan connector (CN7)

Figure 7.21 Cooling Fan Replacement: Fan Unit and Connectors

3. Remove the screws holding the fan unit in place and slide the fan unit out of the drive.

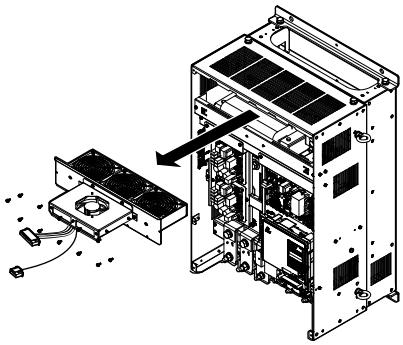

Figure 7.22 Remove the Fan Unit: 2A0169 to 2A0415, 4A0139 to 4A0362, and 5A0062 to 5A0242

4. Remove the fan guard and replace the cooling fans.

Note: Do not pinch the fan cable between parts when reassembling the fan unit.

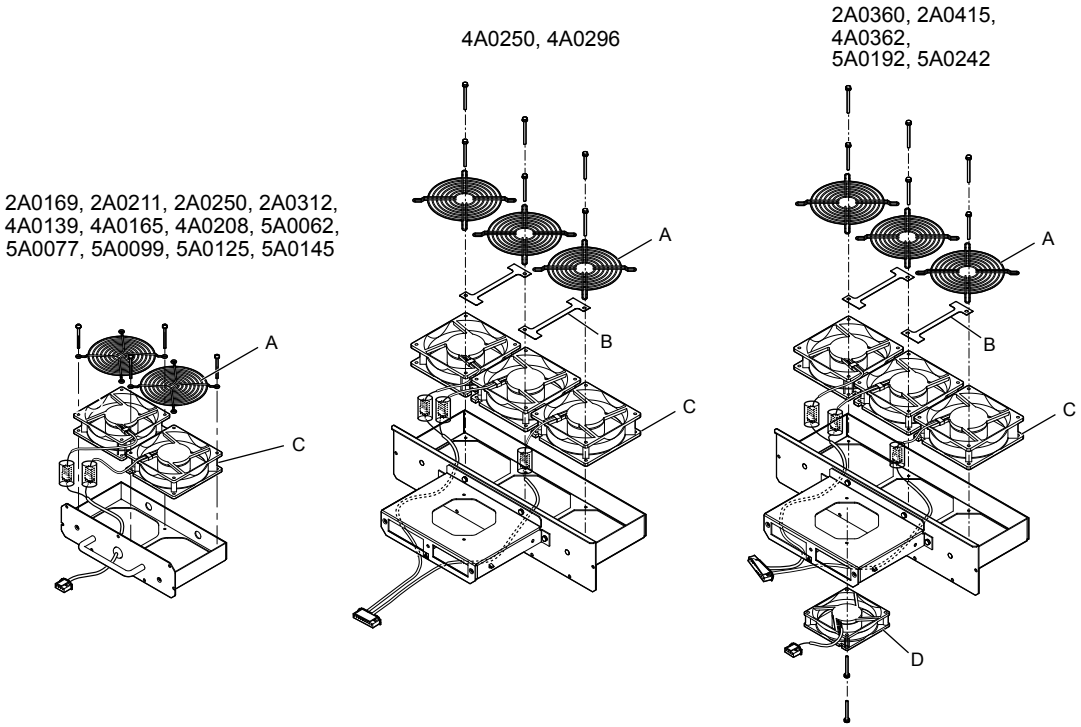

A – Fan guard
B – Cable cover
C – Cooling fan
D – Circulation fan

Figure 7.23 Fan Unit Disassembly: 2A0169 to 2A0415, 4A0139 to 4A0362, and 5A0062 to 5A0242

■ Cooling Fan Wiring: 2A0169, 2A0211, 4A0139, 4A0165, and 5A0062 to 5A0099

1. Position the protective tube so the fan connector sits in the center of the protective tube.

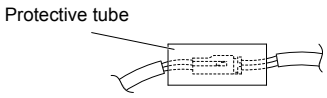

2. Place the fan connector covered by the tube as shown in *Figure 7.24*.

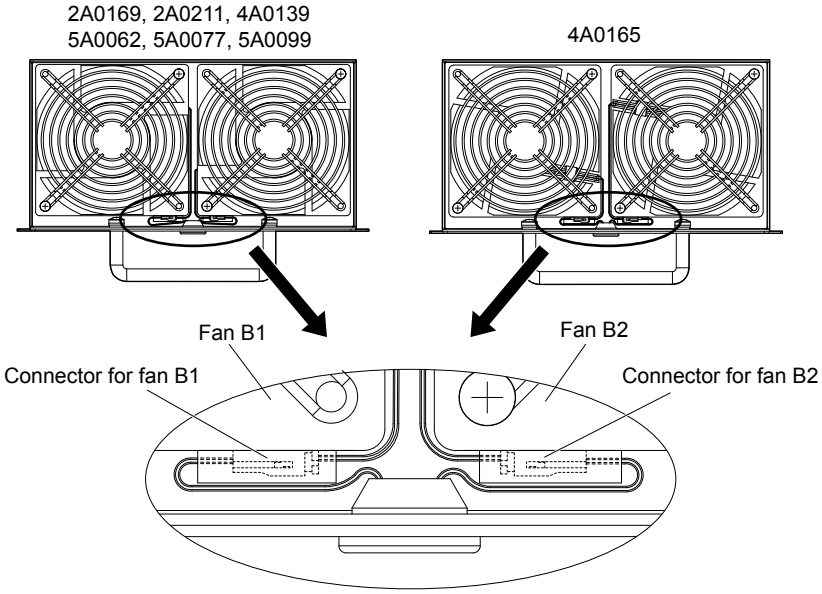

Figure 7.24 Cooling Fan Wiring: 2A0169, 2A0211, 4A0139, 4A0165, and 5A0062 to 5A0099

3. Make sure that the protective tube does not stick out beyond the fan guard.

■ Cooling Fan Wiring: 2A0250, 2A0312, 4A0208, 5A0125, and 5A0145

1. Position the protective tube so the fan connector sits in the center of the protective tube.

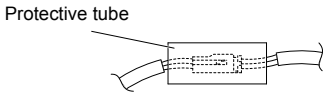

2. Insert the connector for fan B2 and guide the lead wire for fan B2 so the cable hook holds it in place. Insert the connector for fan B1.

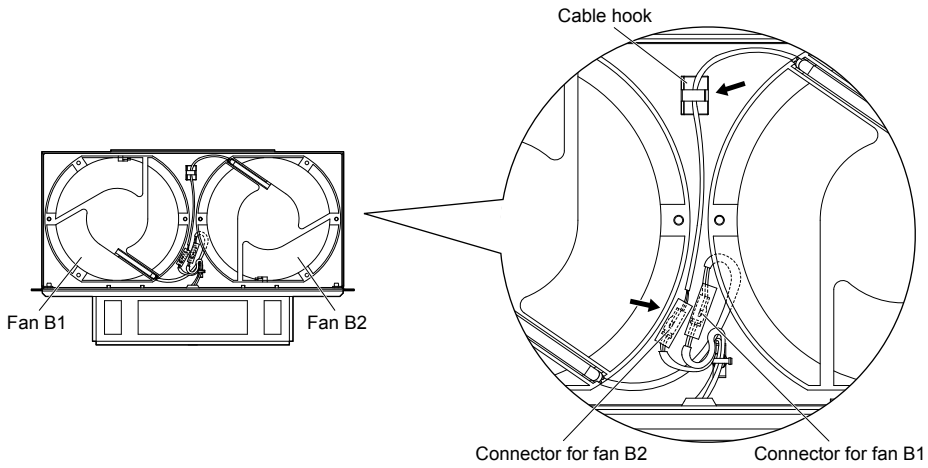

Figure 7.25 Cooling Fan Wiring: 2A0250, 2A0312, 4A0208, 5A0125, and 5A0145

3. Make sure that the protective tube does not stick out beyond the fan guard.

■ Cooling Fan Wiring: 2A0360, 2A0415, 4A0250 to 4A0362, 5A0192, and 5A0242

1. Position the protective tube so the fan connector sits in the center of the protective tube.

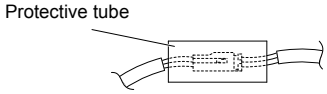

2. In the space between fans 1 and 2, place the fan connector for fan B2 in front of the fan connector for fan B1.
3. Place the connector for fan B3 between fans B2 and B3.

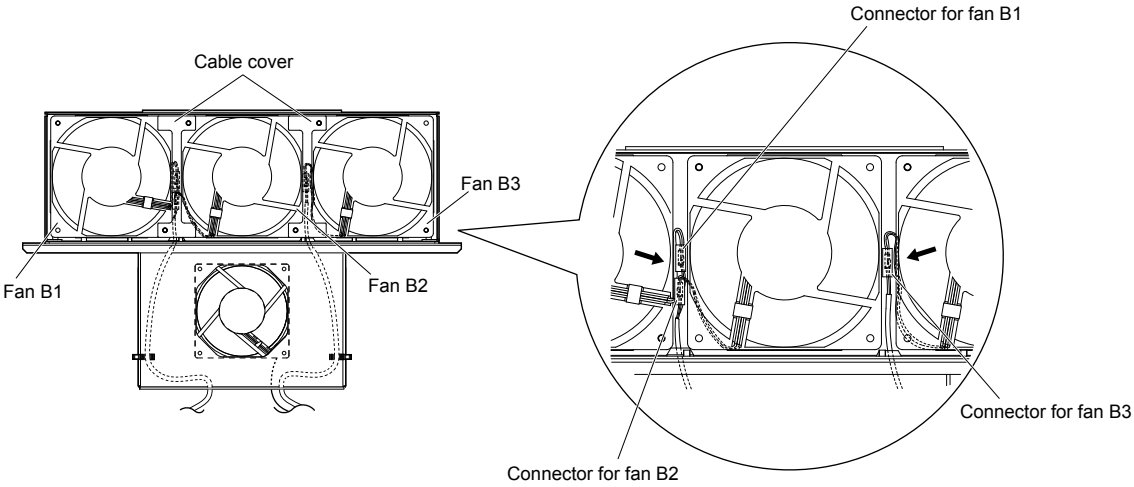

Figure 7.26 Cooling Fan Wiring: 2A0360, 2A0415, 4A0250 to 4A0362, 5A0192, and 5A0242

4. Double-check the relay connector to ensure it is properly connected.
5. Reattach the cable cover to its original position and tighten the screws so the fan guard holds the cable cover in place.

Note: Do not pinch the fan cable between parts when reassembling the fan unit.

■ Installing the Cooling Fan Unit

1. Reverse the procedure described above to reinstall the cooling fan unit.

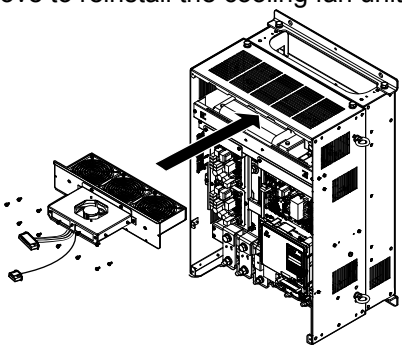

Figure 7.27 Install the Cooling Fan Unit: 2A0169 to 2A0415 and 4A0139 to 4A0362, and 5A0062 to 5A0242

2. Reattach the covers and digital operator.
3. Turn on the power supply and set o4-03 to 0 to reset the Maintenance Monitor cooling fan operation time.

◆ Cooling Fan Replacement: 4A0414

This model allows access to the fans from the front of the drive for fan replacement.

WARNING! *Electrical Shock Hazard. Do not connect or disconnect wiring while the power is on. Failure to comply can result in serious personal injury. Before servicing the drive, disconnect all power to the equipment. The internal capacitor remains charged even after the power supply is turned off. After shutting off the power, wait for at least the amount of time specified on the drive before touching any components.*

CAUTION! *Burn Hazard. Do not touch a hot drive heatsink. Failure to comply could result in minor or moderate injury. Shut off the power to the drive when replacing the cooling fan. To prevent burns, wait at least 15 minutes and ensure the heatsink has cooled down.*

NOTICE: *Follow cooling fan and circulation fan replacement instructions. Improper fan replacement may cause damage to equipment. When installing the replacement fan into the drive, make sure the fan is facing upwards. Replace all fans when performing maintenance to help ensure maximum useful product life.*

NOTICE: *When dismounting the fan bracket sub-assembly on Flange Type Enclosure (NEMA 12 Backside) drives, ensure that the gasket attached to the mounting surface of the fan bracket is not damaged. If the gasket is damaged, contact a Yaskawa representative or the nearest Yaskawa sales office for replacement gasket.* ***Refer to Gasket Replacement for Flange Type Enclosure (NEMA 12 Backside) Drives on page 490*** *for gasket replacement parts and procedures.*

■ Removing and Disassembling the Cooling Fan Unit

1. Remove the terminal cover and front covers 1 and 2.
2. Remove the fan connector (CN6).

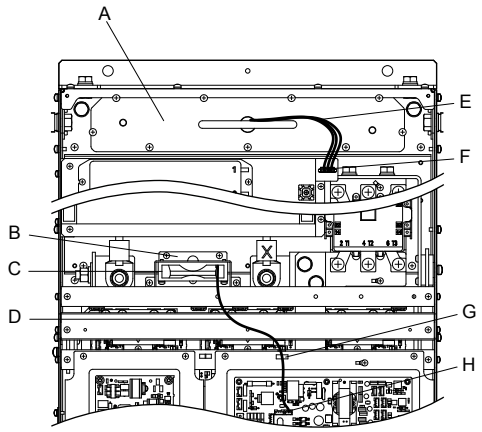

A – Fan unit
B – Circulation fan unit
C – Circulation fan
D – Circulation fan relay cable
E – Fan relay cable
F – Fan connector (CN6)
G – Hook
H – Fan connector (CN7)

Figure 7.28 Component Names: 4A0414

3. Remove the circulation fan relay cable from the hook. Remove the fan connector (CN7).
4. Remove the screws holding the fan units in place and slide the fan units out of the drive.

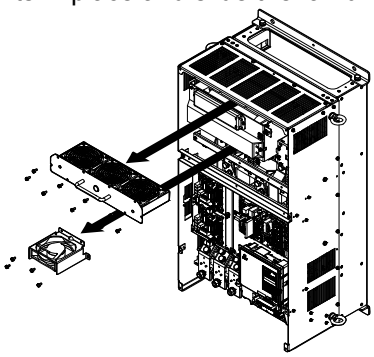

Figure 7.29 Remove the Fan Unit: 4A0414

5. Remove the fan guard and circulation fan casing. Replace the cooling fans.

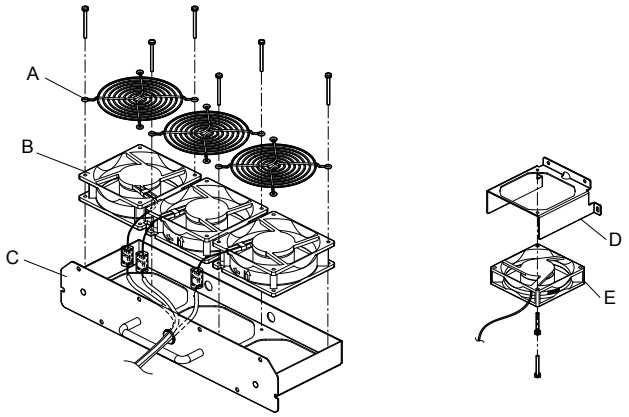

A – Fan guard
B – Cooling fan
C – Fan unit case
D – Circulation fan base
E – Circulation fan

Figure 7.30 Fan Unit Disassembly: 4A0414

■ Cooling Fan Wiring

1. Position the protective tube so the fan connector sits in the center of the protective tube.

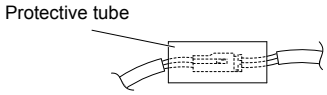

2. Place the fan connector covered by the tube as shown in *Figure 7.31*.

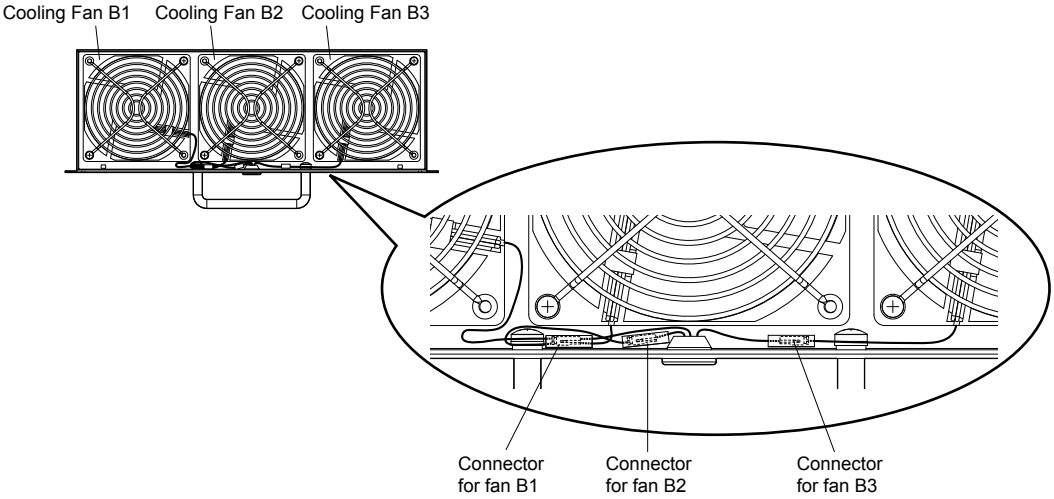

Figure 7.31 Cooling Fan Wiring: 4A0414

3. Double-check the relay connector to ensure that it is properly connected.

■ Installing the Cooling Fan Unit

1. Reverse the procedure described above to reinstall the cooling fan unit.

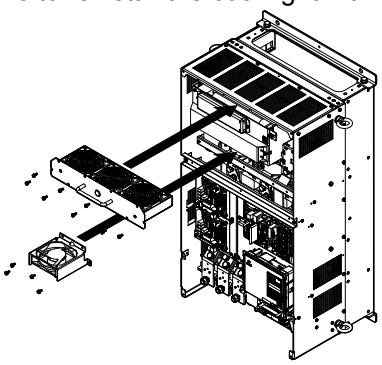

Figure 7.32 Install the Cooling Fan Unit: 4A0414

2. Reattach the covers and digital operator.
3. Turn on the power supply and set o4-03 to 0 to reset the Maintenance Monitor cooling fan operation time.

◆ Cooling Fan Replacement: 4A0515 and 4A0675

These models allow access to the fans from the front of the drive for fan replacement.

WARNING! *Electrical Shock Hazard. Do not connect or disconnect wiring while the power is on. Failure to comply can result in serious personal injury. Before servicing the drive, disconnect all power to the equipment. The internal capacitor remains charged even after the power supply is turned off. After shutting off the power, wait for at least the amount of time specified on the drive before touching any components.*

CAUTION! *Burn Hazard. Do not touch a hot drive heatsink. Failure to comply could result in minor or moderate injury. Shut off the power to the drive when replacing the cooling fan. To prevent burns, wait at least 15 minutes and ensure the heatsink has cooled down.*

NOTICE: *Follow cooling fan and circulation fan replacement instructions. Improper fan replacement may cause damage to equipment. When installing the replacement fan into the drive, make sure the fan is facing upwards. Replace all fans when performing maintenance to help ensure maximum useful product life.*

NOTICE: *When dismounting the fan bracket sub-assembly on Flange Type Enclosure (NEMA 12 Backside) drives, ensure that the gasket attached to the mounting surface of the fan bracket is not damaged. If the gasket is damaged, contact a Yaskawa representative or the nearest Yaskawa sales office for replacement gasket.* ***Refer to Gasket Replacement for Flange Type Enclosure (NEMA 12 Backside) Drives on page 490*** *for gasket replacement parts and procedures.*

■ Removing and Disassembling the Cooling Fan Unit

1. Remove the terminal cover and front covers 1 and 2.
2. Remove the connectors for the cooling fan relay and the circuit board cooling fan.

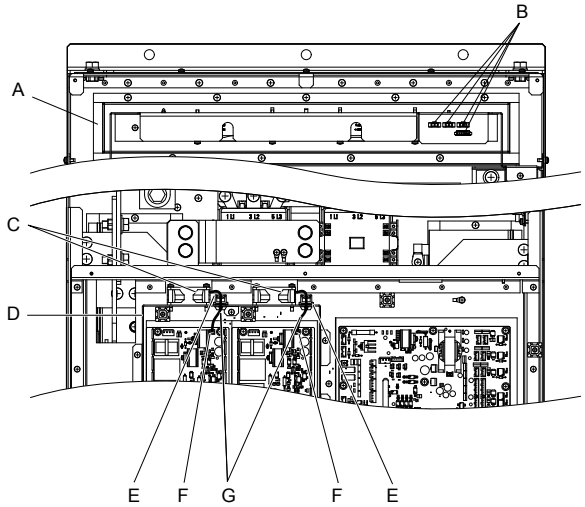

A – Fan unit
B – Fan relay connector
C – Circuit board cooling fan
D – Circuit board cooling fan case
E – Hook
F – Circuit board cooling fan connector
G – Circuit board cooling fan cable

Figure 7.33 Component Names: 4A0515 and 4A0675

3. Loosen all nine screws and slide the panel to the right.

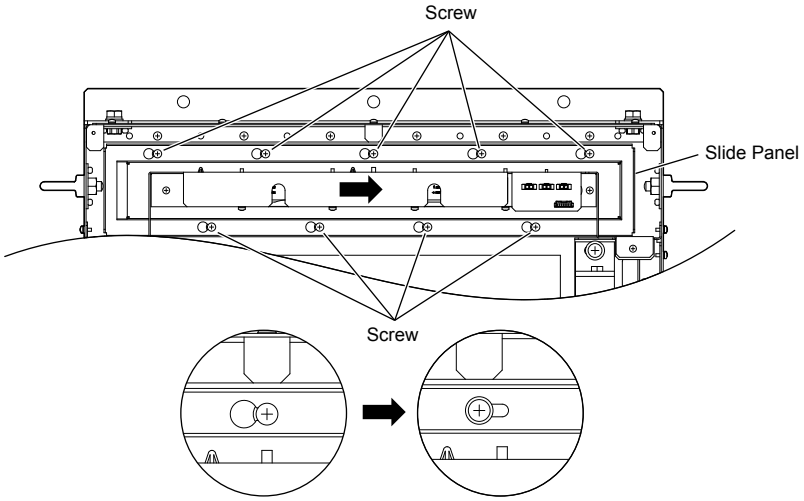

Figure 7.34 Remove the Fan Unit: 4A0515 and 4A0675

4. Remove the slide panel, fan unit, and circuit board cooling fan unit.

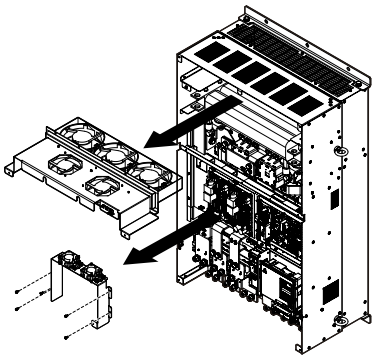

Figure 7.35 Remove the Fan Unit: 4A0515 and 4A0675

5. Replace the cooling fans.

Note: Do not pinch the fan cable between parts when reassembling the fan unit.

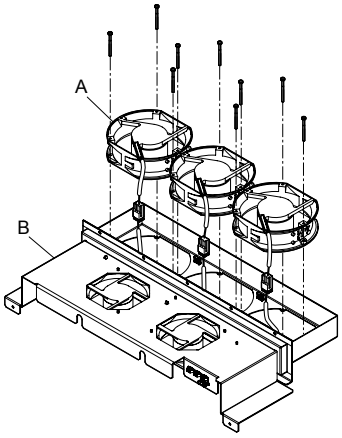

A – Cooling fan **B – Fan unit case**

Figure 7.36 Fan Unit Disassembly: 4A0515 and 4A0675

6. Turn the fan unit over and replace the circulation fans.

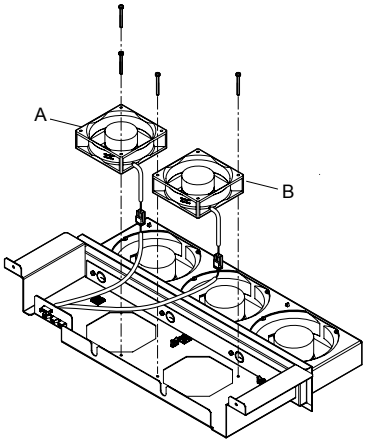

A – Circulation fan 1 **B – Circulation fan 2**

Figure 7.37 Fan Unit Disassembly: 4A0515 and 4A0675

7. Replace the cooling fans.

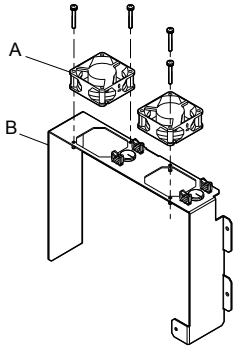

A – Circuit board cooling fan **B – Circuit board cooling fan case**

Figure 7.38 Fan Unit Disassembly: 4A0515 and 4A0675

■ Cooling Fan Wiring

1. Place the cooling fan connectors and guide the lead wires so they are held in place by the cable hooks.

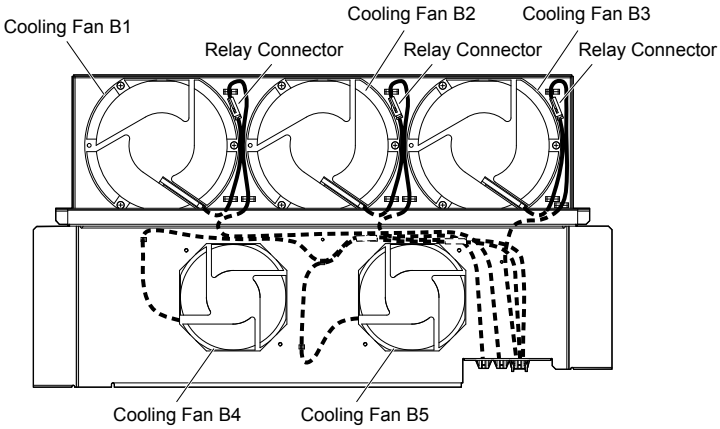

Figure 7.39 Cooling Fan Wiring: 4A0515 and 4A0675

2. Guide the lead wires so that they are held in place by the cable hooks and place the circulation fan connectors between the fan and the fan unit.

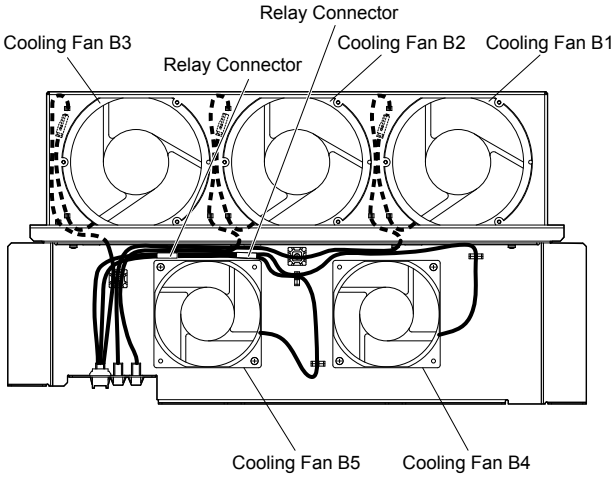

Figure 7.40 Cooling Fan Wiring: 4A0515 and 4A0675

3. Position the protective tube so the fan connector sits in the center of the protective tube. (Circuit board cooling fans only)

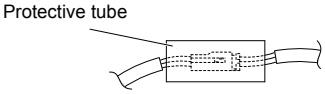

4. Guide the lead wires through the provided hooks so the wires are held in place.

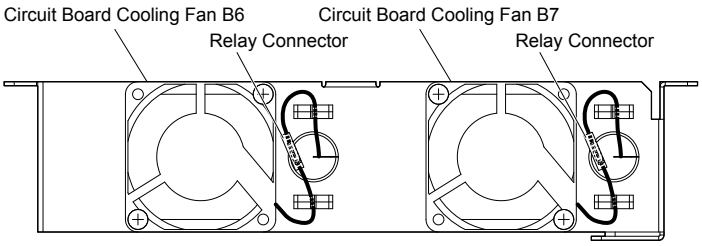

Figure 7.41 Cooling Fan Wiring: 4A0515 and 4A0675

5. Double-check the relay connector to ensure that it is properly connected.

■ Installing the Cooling Fan Unit

1. Reverse the procedure described above to reinstall the cooling fan unit.

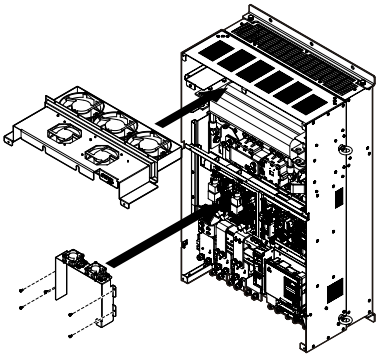

Figure 7.42 Install the Cooling Fan Unit: 4A0515 and 4A0675

2. Reattach the covers and digital operator.
3. Turn on the power supply and set o4-03 to 0 to reset the Maintenance Monitor cooling fan operation time.

◆ Cooling Fan Replacement: 4A0930 and 4A1200

These models allow access to the fans from the front of the drive for fan replacement.

WARNING! *Electrical Shock Hazard. Do not connect or disconnect wiring while the power is on. Failure to comply can result in serious personal injury. Before servicing the drive, disconnect all power to the equipment. The internal capacitor remains charged even after the power supply is turned off. After shutting off the power, wait for at least the amount of time specified on the drive before touching any components.*

CAUTION! *Burn Hazard. Do not touch a hot drive heatsink. Failure to comply could result in minor or moderate injury. Shut off the power to the drive when replacing the cooling fan. To prevent burns, wait at least 15 minutes and ensure the heatsink has cooled down.*

NOTICE: *Follow cooling fan and circulation fan replacement instructions. Improper fan replacement may cause damage to equipment. When installing the replacement fan into the drive, make sure the fan is facing upwards. Replace all fans when performing maintenance to help ensure maximum useful product life.*

NOTICE: *When dismounting the fan bracket sub-assembly on Flange Type Enclosure (NEMA 12 Backside) drives, ensure that the gasket attached to the mounting surface of the fan bracket is not damaged. If the gasket is damaged, contact a Yaskawa representative or the nearest Yaskawa sales office for replacement gasket.* ***Refer to Gasket Replacement for Flange Type Enclosure (NEMA 12 Backside) Drives on page 490*** *for gasket replacement parts and procedures.*

■ Removing and Disassembling the Cooling Fan Unit

1. Remove the terminal cover and front covers 1 and 2.

   CAUTION! *Crush Hazard. Do not completely remove the cover screws, just loosen them. If the cover screws are removed completely, the terminal cover may fall off and cause an injury. Take special care when removing and reattaching the terminal covers for larger drives.*

2. Remove the connectors for the cooling fan relay and the circuit board cooling fan.

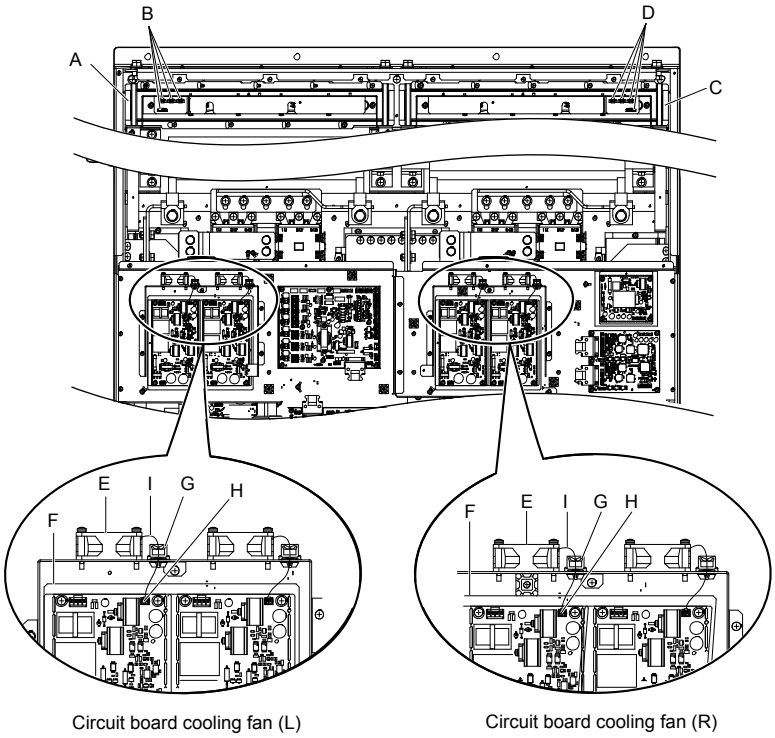

A – Fan unit (L)
B – Fan relay connector (L)
C – Fan unit (R)
D – Fan relay connector (R)
E – Circuit board cooling fan
F – Circuit board cooling fan case
G – Hook
H – Circuit board cooling fan connector
I – Circuit board cooling fan cable

Figure 7.43 Component Names: 4A0930 and 4A1200

3. Loosen screws A (4 count) and B (18 count) and slide the panel to the right.

Note: The fan unit can be removed by loosening these screws; they do not need to be removed.

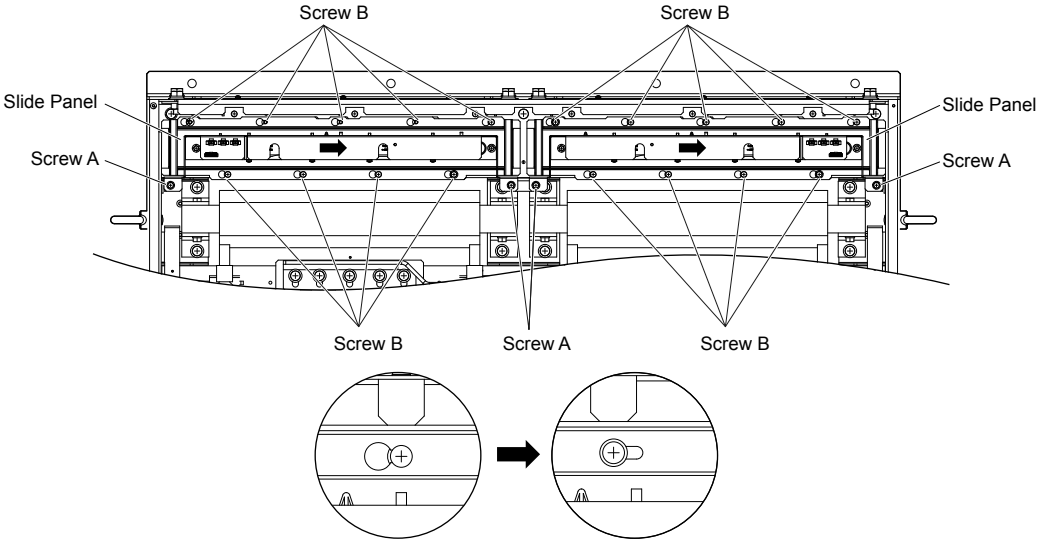

Figure 7.44 Remove the Fan Unit: 4A0930 and 4A1200

4. Remove the slide panel, fan units, and circuit board cooling fan unit.

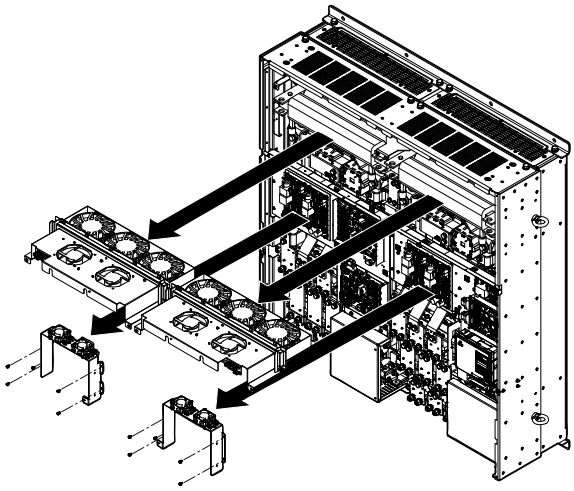

Figure 7.45 Remove the Fan Unit: 4A0930 and 4A1200

5. Replace the cooling fans.

Note: **1.** *Figure 7.46* shows the right side fan unit.
2. Do not pinch the fan cable between parts when reassembling the fan unit.

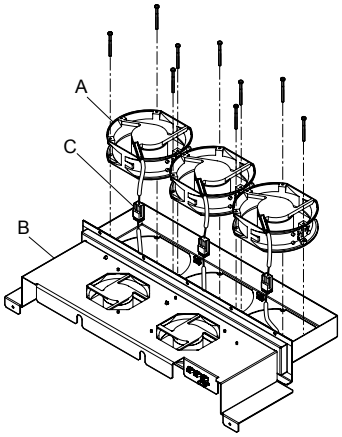

A – Cooling fan
B – Fan unit case
C – Cooling fan connector

Figure 7.46 Fan Unit Disassembly: 4A0930 and 4A1200

6. Place the cooling fan connectors and guide the lead wires so that they are held in place by the cable hooks.

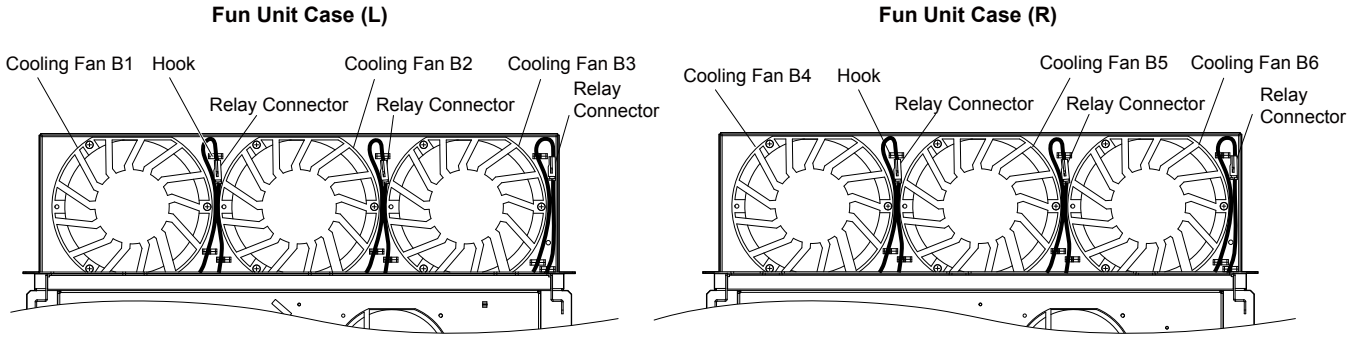

Figure 7.47 Cooling Fan Wiring: 4A0930 and 4A1200

7. Turn the fan unit over and replace the circulation fans.

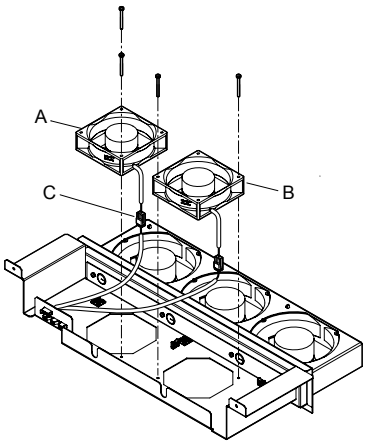

A – Circulation fan 1
B – Circulation fan 2
C – Cooling fan connector

Figure 7.48 Fan Unit Disassembly: 4A0930 and 4A1200

8. Place the cooling fan connectors and guide the lead wires so that they are held in place by the cable hooks.

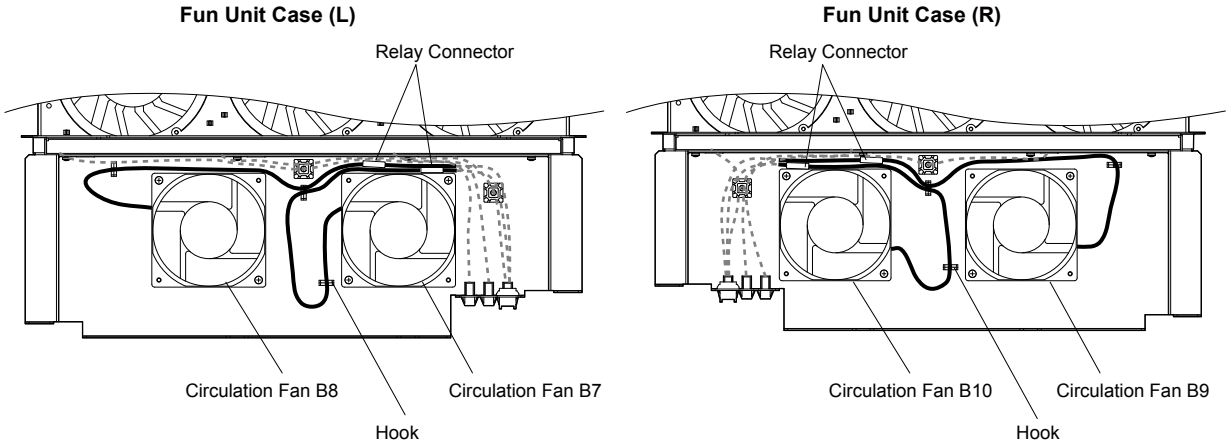

Figure 7.49 Cooling Fan Wiring: 4A0930 and 4A1200

9. Replace the circuit board cooling fans.

Note: *Figure 7.50* shows the right side circuit board cooling fan.

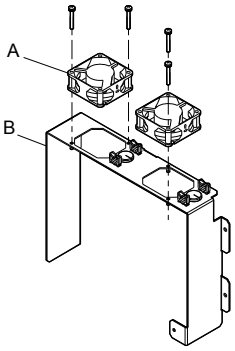

A – Circuit board cooling fan
B – Circuit board cooling fan case

Figure 7.50 Fan Unit Disassembly: 4A0930 and 4A1200

10. Position the protective tube so the fan connector sits in the center of the protective tube. (Circuit board cooling fans only)

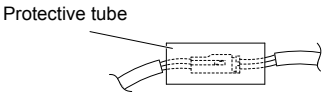

11. Guide the lead wires through the provided hooks so the wires are held in place.

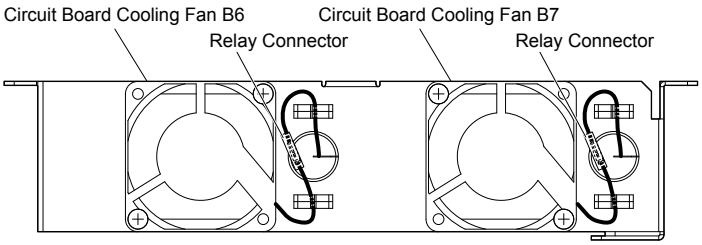

Figure 7.51 Cooling Fan Wiring: 4A0930 and 4A1200

12. Double-check the relay connector to ensure that it is properly connected.

■ Installing the Cooling Fan Unit

1. Reverse the procedure described above to reinstall the cooling fan unit.

Note: Properly connect the relay connectors to the fan unit connectors.

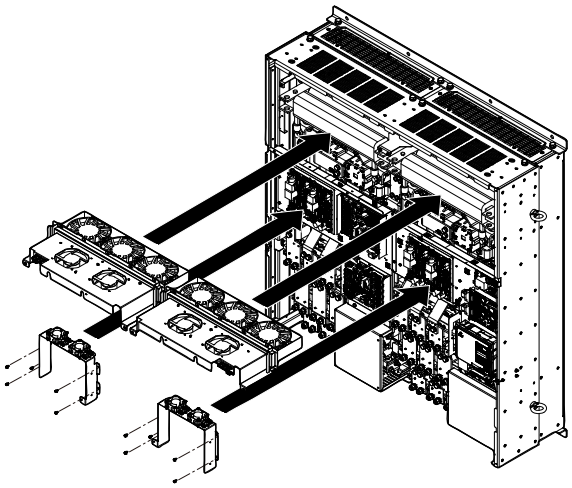

Figure 7.52 Install the Cooling Fan Unit: 4A0930 and 4A1200

2. Reattach the covers and digital operator.

3. Turn on the power supply and set o4-03 to 0 to reset the Maintenance Monitor cooling fan operation time.

◆ Gasket Replacement for Flange Type Enclosure (NEMA 12 Backside) Drives

■ Gasket Replacement Procedure

1. Use a plastic scraper to remove the damaged or torn gasket without scratching the mounting surfaces.
2. Peel off the adhesive cover from the replacement gasket.
3. Align the holes on the mounting flange or fan bracket with the holes on the replacement gasket and apply the new gasket.

■ Gasket Replacement Parts

Each replacement part contains two gaskets in the event that a gasket is torn during application.

Contact a Yaskawa representative or the nearest Yaskawa sales office to order replacement gaskets as required.

Table 7.6 Gasket Replacement Part Numbers

Drive Model	Replacement Part	Part Number
2A0110U 4A0058U	Mounting Flange Gasket	UGK00418-A
2A0138U 4A0072U 5A0041U 5A0052U	Mounting Flange Gasket	UGK00419-A
4A0088U 4A0103U	Mounting Flange Gasket	UGK00420-A
2A0169U 2A0211U 4A0139U 4A0165U 5A0062U 5A0077U 5A0099U	Fan Bracket Gasket	UGK00421-A
2A0250U 2A0312U 4A0208U 5A0125U 5A0145U	Fan Bracket Gasket	UGK00422-A
2A0360U 4A0250U 4A0296U 4A0362U 5A0192U 5A0242U 2A0415U	Fan Bracket Gasket	UGK00423-A
4A0414U	Fan Bracket Gasket	UGK00424-A
4A0515U 4A0675U 4A0930U 4A1200U	Fan Bracket Gasket	UGK00425-A

7.5 Replacing the Air Filter

Drive models 4A0930 and 4A1200 have a built-in air filter.

Contact a Yaskawa representative or the nearest Yaskawa sales office to order new replacement air filters as necessary.

Follow the instructions below to remove and replace the air filter.

◆ Air Filter Replacement

WARNING! *Electrical Shock Hazard. Do not connect or disconnect wiring while the power is on. Failure to comply can result in serious personal injury. Before servicing the drive, disconnect all power to the equipment. The internal capacitor remains charged even after the power supply is turned off. After shutting off the power, wait for at least the amount of time specified on the drive before touching any components.*

CAUTION! *Burn Hazard. Do not touch a hot drive heatsink. Failure to comply could result in minor or moderate injury. Shut off the power to the drive when replacing the cooling fan. To prevent burns, wait at least 15 minutes and ensure the heatsink has cooled down.*

NOTICE: *Follow air filter replacement instructions. Improper air filter replacement may cause damage to equipment. Replace all filters when performing maintenance to help ensure maximum useful product life.*

■ Removing the Air Filter

1. Remove the terminal cover.
2. Remove the screws holding the blind cover in place on the bottom of the drive. Pull forward on the blind cover to free it from the drive.

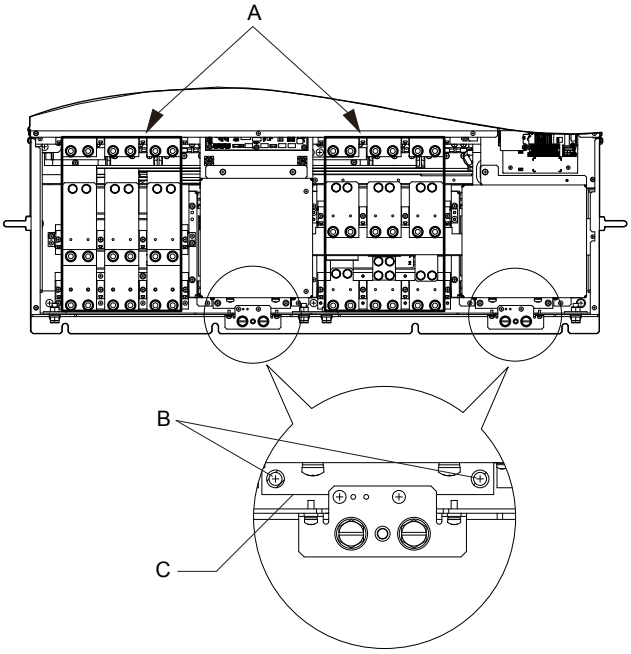

A – Main circuit terminals
B – Blind cover screws
C – Blind cover

Figure 7.53 Remove the Blind Cover

3. Loosen the screws holding the filter case in place. Do not remove the screws.

Note: Only loosen the filter case; it should not be removed.

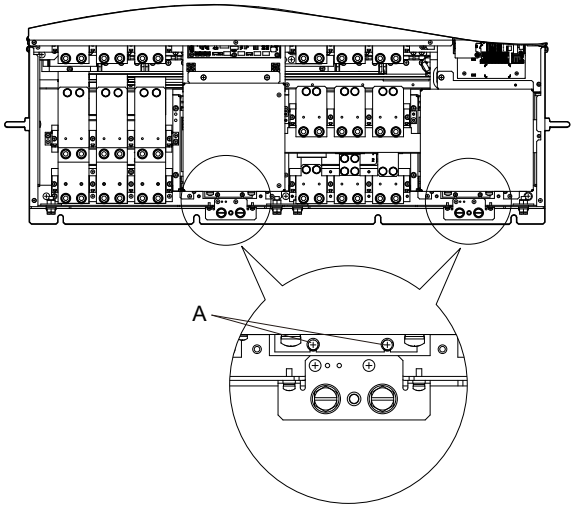

A –Screws holding filter case

Figure 7.54 Loosen the Filter Case Screws

4. Hold the bottom of the filter case and slide it out from the drive.

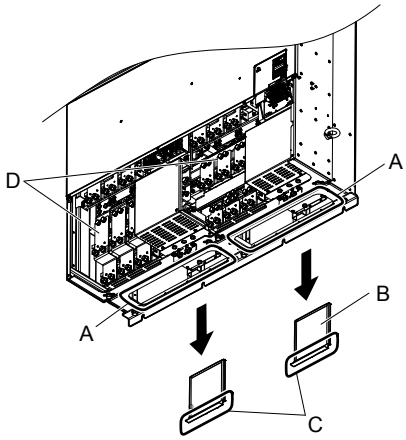

A – Opening
B – Filter case
C – Hold the filter case here to slide it out
D – Main circuit terminals

Figure 7.55 Slide Out the Filter Case

5. Remove the filter from the filter case

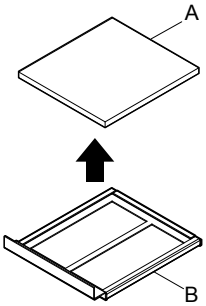

A – Air filter
B – Filter case

Figure 7.56 Remove the Air Filter

■ Installing the Air Filter

Reverse the procedure described above to reinstall the air filter.

7.6 Drive Replacement

◆ Serviceable Parts

The drive contains some serviceable parts. The following parts can be replaced over the life span of the drive:

- Terminal board I/O PCBs
- Cooling fan(s)
- Front cover

Replace the drive if the main power circuitry is damaged. Contact Yaskawa or a Yaskawa representative before replacing parts if the drive is still under warranty. Yaskawa reserves the right to replace or repair the drive according to Yaskawa warranty policy.

◆ Terminal Board

The drive has a modular I/O terminal block that facilitates quick drive replacement. The terminal board contains on-board memory that stores all drive parameter settings and allows the parameters to be saved and transferred to the replacement drive. To transfer the terminal board, disconnect the terminal board from the damaged drive and reconnect it to the replacement drive. There is no need to manually reprogram the replacement drive after transferring the terminal board.

Note: If the damaged drive and the new replacement drive are have different capacities, the data stored in the terminal board cannot be transferred to the new drive and an oPE01 error will appear on the display. The terminal board can still be used, but parameter setting from the old drive cannot be transferred. The replacement drive must be initialized and manually programmed.

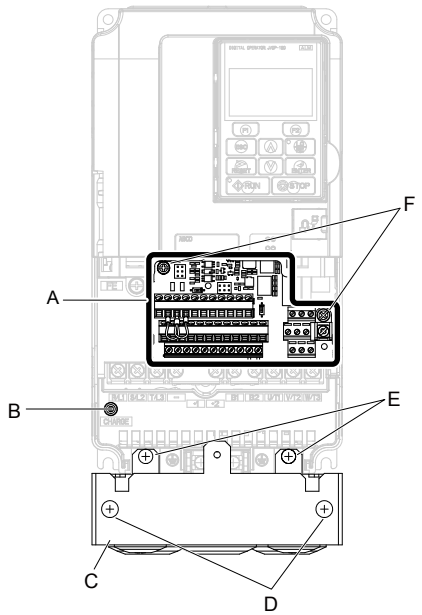

A – Removable terminal board
B – Charge LED
C – Conduit bracket
D – Conduit bracket cover screws
E – Conduit bracket mounting screws
F – Terminal board locking screws

Figure 7.57 Terminal Board

◆ Replacing the Drive

WARNING! *Electrical Shock Hazard. Do not connect or disconnect wiring while the power is on. Failure to comply can result in serious personal injury. Before servicing the drive, disconnect all power to the equipment. The internal capacitor remains charged even after the power supply is turned off. After shutting off the power, wait for at least the amount of time specified on the drive before touching any components.*

WARNING! *Electrical Shock Hazard. Do not allow unqualified personnel to perform work on the drive. Failure to comply could result in serious injury. Installation, maintenance, inspection and servicing must be performed only by authorized personnel familiar with installation, adjustment and maintenance of AC drives.*

NOTICE: *Observe proper electrostatic discharge procedures (ESD) when handling the drive and circuit boards. Failure to comply may result in ESD damage to the drive circuitry.*

The following procedure explains how to replace a drive.

This section provides instructions for drive replacement only.

To install option boards or other types of options, refer to the specific manuals for those options.

NOTICE: *When transferring a braking transistor, braking resistor, or other type of option from a damaged drive to a new replacement drive, make sure it is working properly before reconnecting it to the new drive. Replace broken options to prevent immediate breakdown of the replacement drive.*

1. Remove the terminal cover.

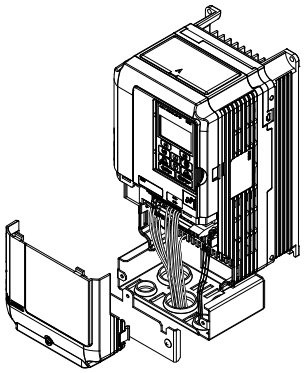

Figure 7.58 Remove the Terminal Cover

2. Loosen the screws holding the terminal board in place. Remove the screw securing the bottom cover and remove the bottom cover from the drive.

Note: IP00/Open Type enclosure drives do not have a bottom cover or conduit.

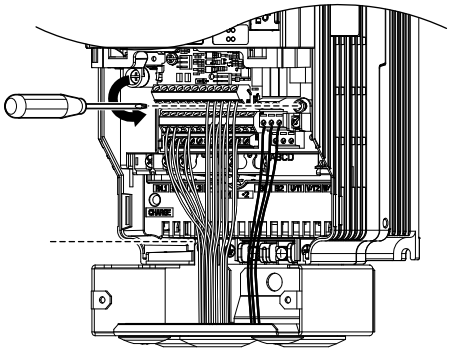

Figure 7.59 Unscrew the Terminal Board and Remove the Bottom Cover

3. Slide the terminal board as illustrated by the arrows to remove it from the drive along with the bottom cover.

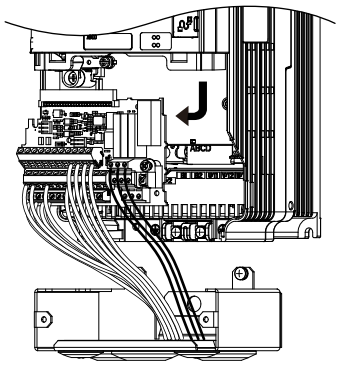

Figure 7.60 Remove the Terminal Board

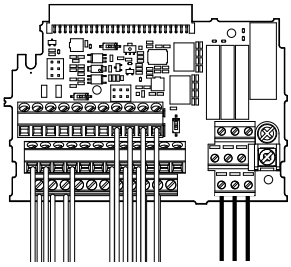

Figure 7.61 Disconnected Removable Terminal Board

4. Disconnect all option cards and options, making sure they are intact before reusing.
5. Replace the drive and wire the main circuit.

Installing the Drive

1. After wiring the main circuit, connect the terminal block to the drive as shown in *Figure 7.62*. Use the installation screw to fasten the terminal block into place.

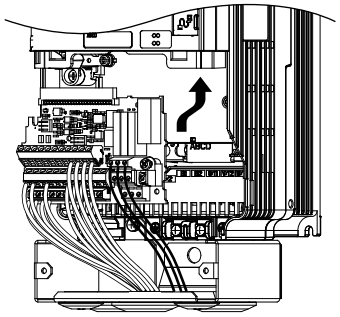

Figure 7.62 Install the Terminal Board

2. Reconnect options for the new drive the same way the options were connected in the old drive. Connect option boards to the same option ports in the new drive that were used in the old drive.
3. Replace the terminal cover.
4. After powering on the drive, all parameter settings are transferred from the terminal board to the drive memory. If an oPE04 error occurs, load the parameter settings saved on the terminal board to the new drive by setting parameter A1-03 to 5550. Reset the Maintenance Monitor function timers by setting parameters o4-01 through o4-12 to 0, and parameter o4-13 to 1.

This Page Intentionally Blank

8

Peripheral Devices & Options

This chapter explains the installation of peripheral devices and options available for the drive.

8.1 SECTION SAFETY....498
8.2 DRIVE OPTIONS AND PERIPHERAL DEVICES....500
8.3 CONNECTING PERIPHERAL DEVICES....502
8.4 OPTION INSTALLATION....503
8.5 INSTALLING PERIPHERAL DEVICES....514

8.1 Section Safety

⚠ DANGER

Electrical Shock Hazard

Before servicing, disconnect all power to the equipment.

The internal capacitor remains charged even after the power supply is turned off. The charge indicator LED will extinguish when the DC bus voltage is below 50 Vdc. To prevent electric shock, wait for at least the time specified on the warning label, once all indicators are OFF, measure for unsafe voltages to confirm the drive is safe prior to servicing.

Failure to comply will result in death or serious injury.

⚠ WARNING

Electrical Shock Hazard

Do not operate equipment with covers removed.

Failure to comply could result in death or serious injury.

The diagrams in this section may show drives without covers or safety shields to show details. Be sure to reinstall covers or shields before operating the drives and run the drives according to the instructions described in this manual.

Do not remove covers or touch circuit boards while the power is on.

Failure to comply could result in death or serious injury.

Do not allow unqualified personnel to perform work on the drive.

Failure to comply could result in death or serious injury.

Installation, maintenance, inspection, and service must be performed only by authorized personnel familiar installation, adjustment, and maintenance of drives.

Do not perform work on the drive while wearing loose clothing, jewelry or without eye protection.

Failure to comply could result in death or serious injury.

Remove all metal objects such as watches and rings, secure loose clothing and wear eye protection before beginning work on the drive.

Always ground the motor-side grounding terminal.

Improper equipment grounding could result in death or serious injury by contacting the motor case.

Do not remove covers or touch circuit boards while the power is on.

Failure to comply could result in death or serious injury.

Do not use damaged wires, place excessive stress on wiring, or damage the wire insulation.

Failure to comply could result in death or serious injury.

Fire Hazard

Tighten all terminal screws to the specified tightening torque.

Loose electrical connections could result in death or serious injury by fire due to overheating of electrical connections.

NOTICE

Observe proper electrostatic discharge procedures (ESD) when handling the drive and circuit boards.

Failure to comply may result in ESD damage to the drive circuitry.

Never connect or disconnect the motor from the drive while the drive is outputting voltage.

Improper equipment sequencing could result in damage to the drive.

If a fuse is blown or a Ground Fault Circuit Interrupter (GFCI) is tripped, check the wiring and the selection of the peripheral devices.

Contact your supplier if the cause cannot be identified after checking the above.

Do not restart the drive or immediately operate the peripheral devices if a fuse is blown or a GFCI is tripped.

Check the wiring and the selection of peripheral devices to identify the cause. Contact your supplier before restarting the drive or the peripheral devices if the cause cannot be identified.

Do not operate damaged equipment.

Failure to comply could result in further damage to the equipment.

Do not connect or operate any equipment with visible damage or missing parts.

Do not use unshielded wire for control wiring.

Failure to comply may cause electrical interference resulting in poor system performance. Use shielded twisted-pair wires and ground the shield to the ground terminal of the drive.

Properly connect all pins and connectors.

Failure to comply may prevent proper operation and possibly damage equipment.

Check all the wiring to ensure that all connections are correct after installing the option and connecting any other devices.

Failure to comply could result in damage to the option.

8.2 Drive Options and Peripheral Devices

Table 8.1 lists the names of the various peripheral devices, accessories, and options available for Yaskawa drives. Contact Yaskawa or your Yaskawa agent to order these peripheral devices.

- **Peripheral Device Selection**: Refer to the Yaskawa catalog for selection and part numbers.
- **Peripheral Device Installation**: Refer to the corresponding option manual for installation instructions.

Table 8.1 Available Peripheral Devices

Option	Model Number	Description
Power Options		
DC link choke	–	Improves the power factor by suppressing harmonic distortion from the power supply.
AC Reactor	–	Protects the drive when operating from a large power supply and improves the power factor by suppressing harmonic distortion. Highly recommended for power supplies that exceed 600 kVA.
Braking Resistor	–	For use with systems that require dynamic braking with up to 3% ED. If higher ED is required, use a Braking Resistor Unit. **Note:** Not rated for 600 V class drive models.
Input/Output Option Cards		
Analog Input	AI-A3	• Allows high precision, high resolution analog reference input • Input channels: 3 • Voltage input: -10 to 10 Vdc (20 kΩ), 13-bit signed • Current input: 4 to 20 mA or 0 to 20 mA (250 Ω), 12-bit
Analog Monitor	AO-A3	• Provides extra multi-function analog output terminals • Output channels: 2 • Output voltage: -10 to 10 V, 11-bit (signed)
Digital Input	DI-A3	• Sets the frequency reference by digital inputs • Input channels: 18 (including SET signal and SIGN signal) • Input signal type: BCD 16-bit (4-digit), 12-bit (3-digit), 8-bit (2-digit) • Input signal: 24 Vdc, 8 mA
Digital Output	DO-A3	• Provides extra insulated multi-function digital outputs • Photocoupler relays: 6 (48 V, up to 50 mA) • Contact relays: 2 (250 Vac/up to 1 A, 30 Vdc/up to 1 A)
Motor Speed Feedback Option Cards		
Motor PG Feedback Line Driver Interface	PG-X3	• For speed feedback input by connecting a motor encoder • Input: 3-track (can be used with 1 or 2 tracks), line driver, 300 kHz max • Pulse monitor: Matches RS-422 level • Output: 3-track, line driver • Encoder power supply: 5 V or 12 V, max current 200 mA
Motor PG Feedback Open Collector Interface	PG-B3	• For speed feedback input by connecting a motor encoder • Input: 3-track (can be used with 1 or 2 tracks), HTL encoder connection, 50 kHz max • Output: 3-track, open collector • Encoder power supply: 12 V, max current 200 mA
EnDat Encoder	PG-F3	• For speed feedback input by connecting a motor encoder • Encoder type: EnDat 2.1/01, EnDat 2.2/01, and EnDat 2.2/ 22 (HEIDENHAIN), HIPERFACE (SICK-STEGMANN) • Maximum input frequency: 20 kHz • Pulse monitor: Matches RS-422 level • Output voltage: 5 V±5%, 8 V±10% • Maximum output current: 200 mA • Encoder power supply: 5 V, max current 330 mA or 8 V, max current 150 mA • Wiring length: 20 m max. for the encoder, 30 m max. for the pulse monitor **Note:** 1. Available in drive software versions PRG: 1018 and later. 2. The PG-F3 option can only be used in CLV/PM and might not be compatible with models 4A0930 and 4A1200.

Option	Model Number	Description
Motor Feedback Resolver Interface	PG-RT3	• For motor speed feedback by connecting a resolver that meets the specifications set by Yaskawa. • Input voltage: 10 Vac rms 10 kHz • Transformation ratio: 0.5 ± 5% • Maximum input current: 100 mA rms **Note:** 1. Available in drive software versions PRG: 1017 and later. 2. Not available with drive models 4A0930 and 4A1200.
Communication Option Cards		
EtherNet/IP	SI-EN3	Connects to an EtherNet/IP network.
Modbus TCP/IP	SI-EM3	Connects to a Modbus TCP/IP network.
PROFINET	SI-EP3	Connects to a PROFINET network.
LonWorks	SI-W3	Connects to a LonWorks network.
DeviceNet	SI-N3	Connects to a DeviceNet network
PROFIBUS-DP	SI-P3	Connects to a PROFIBUS-DP network.
MECHATROLINK-II	SI-T3	Connects to a MECHATROLINK-II network.
MECHATROLINK-III	SI-ET3	Connects to a MECHATROLINK-III network.
BACnet	SI-B3	Connects to a BACnet network.
EtherCAT	SI-ES3	Connects to an EtherCAT network.
CC-Link <1>	SI-C3	Connects to a CC-Link network.
CANopen <1>	SI-S3	Connects to a CANopen network.
Interface Options		
LED Operator	JVOP-182	5-digit LED operator; max. cable length for remote usage: 3 m
Remote Operator Cable	UWR000051, 1 m cable UWR000052, 2 m cable	RJ-45, 8-pin straight through, UTP CAT5e, extension cable (1 m or 2 m) to connect the digital operator for remote operation.
USB Copy Unit	JVOP-181	• Allows the user to copy and verify parameter settings between drives. • Functions as an adapter to connect the drive to a USB port on a PC.
Mechanical Options		
Attachment for External Heatsink	EZZ020800A/B/C/D	Installation kit for mounting the drive with the heatsink outside of the panel
IP20/NEMA 1, UL Type 1 Kit	EZZ021136A-H	Parts to make the drive conform to IP20/NEMA 1, UL Type 1 enclosure requirements.
IP20/NEMA 1, UL Type 1, 4, 12 Blank Keypad Kit	UUX0000526	Provides digital operator (JVOP-180, JVOP-182) functionality on an enclosure designed for IP20/NEMA 1, UL Type 1, 3R, 4, 4X, 12, or IP□6 environment. This keypad has a blank label on the front.
IP20/NEMA 1, UL Type 1 4, 12 Yaskawa Logo Keypad Kit	UUX0000527	Provides digital operator (JVOP-180, JVOP-182) functionality on an enclosure designed for IP20/NEMA 1, UL Type 1, 3R, 4, 4X, 12, or IP□6 environment. This keypad has a Yaksawa brand label on the front.
Others		
24 V Power Supply	200 V Class: PS-A10LB 400 V Class: PS-A10HB 600 V Class: PS-A10HB	Supplies the drive controller with 24 Vdc power during main power loss.
PC Software Tools		
DriveWizard Industrial	Contact Yaskawa	PC tool for drive setup and parameter management
DriveWorksEZ	Contact Yaskawa	PC tool for enhanced programming of the drive

<1> Limited support. Contact a Yaskawa representative or the nearest Yaskawa sales office for assistance.

8.3 Connecting Peripheral Devices

Figure 8.1 illustrates how to configure the drive and motor to operate with various peripheral devices.

Refer to the specific manual for the devices shown below for more detailed installation instructions.

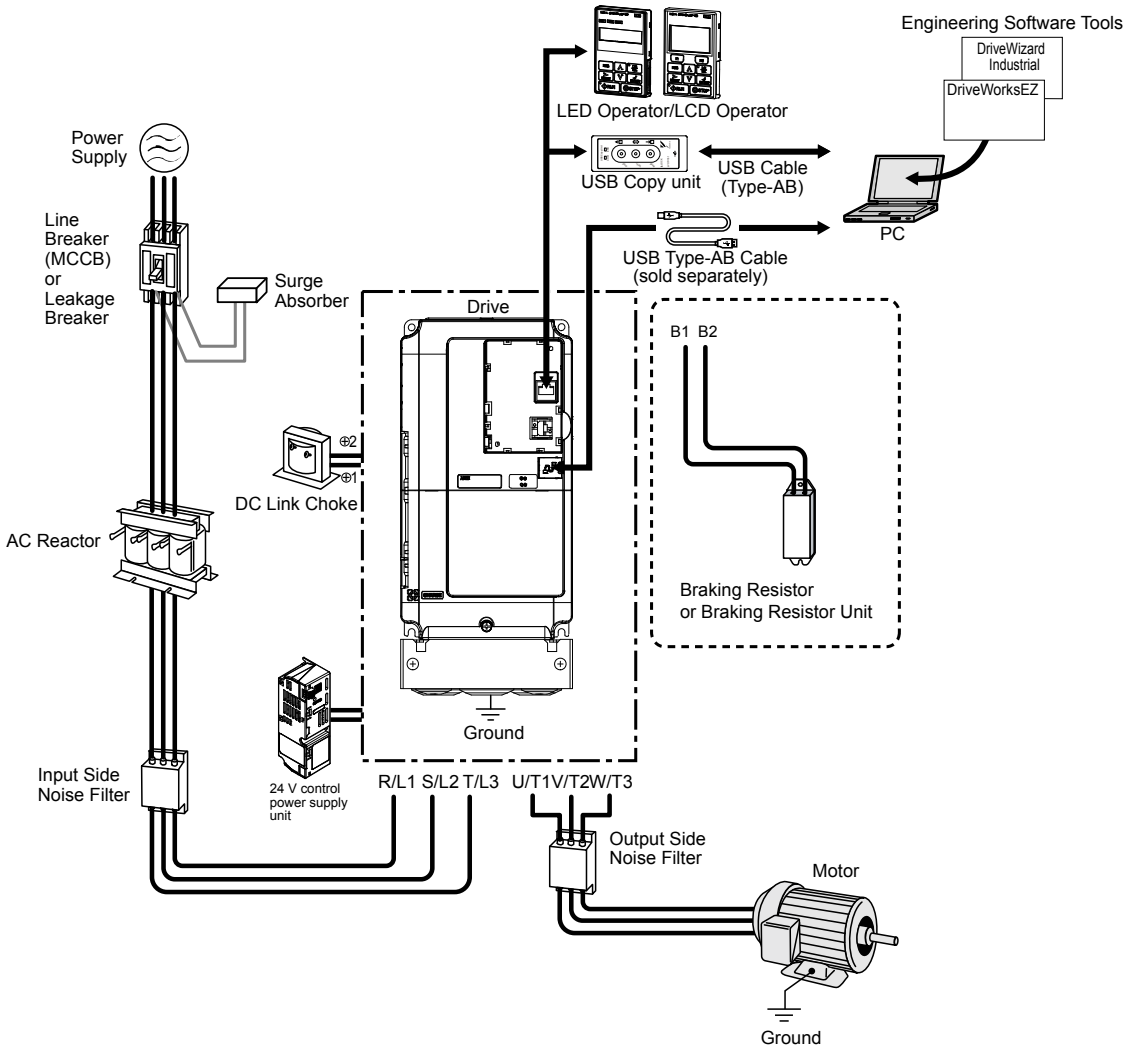

Figure 8.1 Connecting Peripheral Devices

Note: If the drive is set to trigger a fault output when the fault restart function is activated (L5-02 = 1), then a sequence to interrupt power when a fault occurs will turn off the power to the drive while the drive attempts to restart. The default setting for L5-02 is 0 (fault output active during restart).

8.4 Option Installation

This section provides instructions on installing the options in *Table 8.2*.

◆ Prior to Installing the Option

Prior to installing the option, wire the drive, make necessary connections to the drive terminals, and verify that the drive functions normally without the option installed.

Table 8.2 below lists the number of options that can be connected to the drive and the drive ports for connecting those options.

Table 8.2 Option Installation

Option	Port/Connector	Number of Options Possible
PG-B3, PG-X3	CN5-C (CN5-B) <1>	2 <1>
PG-F3 <2> <3>, PG-RT3 <2> <3>	CN5-C	1
AO-A3, DO-A3	CN5-A, B, C	1
SI-B3, SI-C3, SI-EN3, SI-EM3, SI-EP3, SI-ES3, SI-ET3, SI-N3, SI-P3, SI-S3, SI-T3, SI-W3, AI-A3 <4>, DI-A3 <4>	CN5-A	1

<1> When connecting only one PG option card, use the CN5-C connector. When connecting two PG option cards, use both CN5-B and CN5-C.

<2> Not available for the application with Motor 2 Selection.

<3> Not available with models 4A0930 and 4A1200.

<4> When using AI-A3 and DI-A3 as monitors, the card can be connected to any of CN5-A, CN5-B or CN5-C. The input status of AI-A3 can then be viewed using U1-21, U1-22, and U1-23, and the input status of DI-A3 can then be viewed using U1-17.

Figure 8.2 shows an exploded view of the drive with the option and related components for reference.

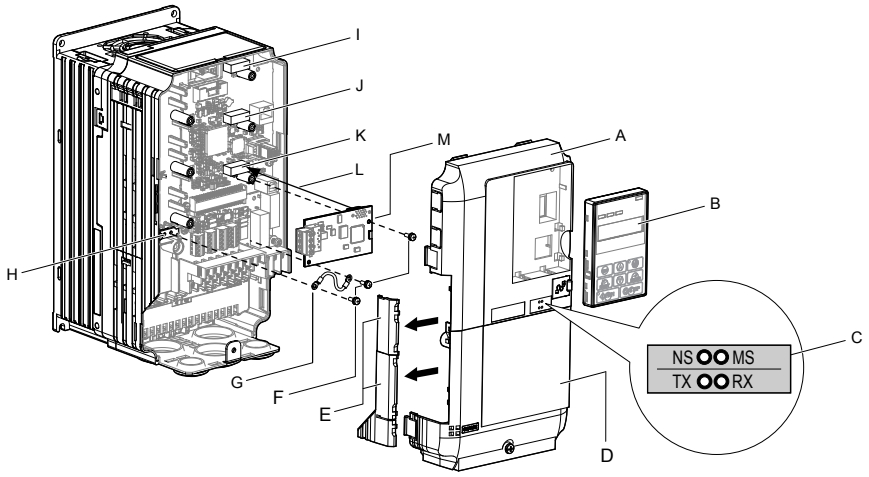

A – Drive front cover
B – Digital operator
C – LED label (for communication options)
D – Drive terminal cover
E – Removable tabs for wire routing
F – Included screws
G – Ground wire
H – Drive grounding terminal (FE)
I – Connector CN5-C
J – Connector CN5-B
K – Connector CN5-A
L – Insertion point for CN5 connector
M – Option

Figure 8.2 Drive Components with Option

◆ PG Option Installation Example

Remove the front covers of the drive before installing the option. PG options can inserted into the CN5-B or CN5-C connectors located on the drive control board.

1. Shut off power to the drive, wait the appropriate amount of time for voltage to dissipate, then remove the digital operator (B) and front covers (A, D). Front cover removal varies by model.

   DANGER! *Electrical Shock Hazard. Do not connect or disconnect wiring while the power is on. Failure to comply will result in death or serious injury. Before installing the option, disconnect all power to the drive. The internal capacitor remains charged even after the power supply is turned off. The charge indicator LED will extinguish when the DC bus voltage is below 50 Vdc. To prevent electric shock, wait at least five minutes after all indicators are off and measure the DC bus voltage level to confirm safe level.*

   NOTICE: *Damage to Equipment. Observe proper electrostatic discharge procedures (ESD) when handling the option, drive, and circuit boards. Failure to comply may result in ESD damage to circuitry.*

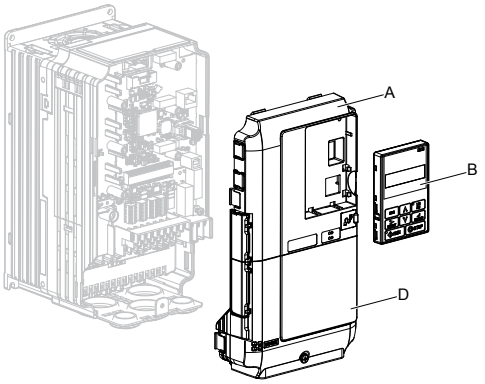

Figure 8.3 Remove the Front Covers and Digital Operator

2. Insert the option (M) into the **CN5-B or CN5-C** connector (I, J) located on the drive and fasten it using one of the included screws (F). Use the **CN5-C** connector when connecting only one PG option. ***Refer to Option Installation on page 503*** for more information.

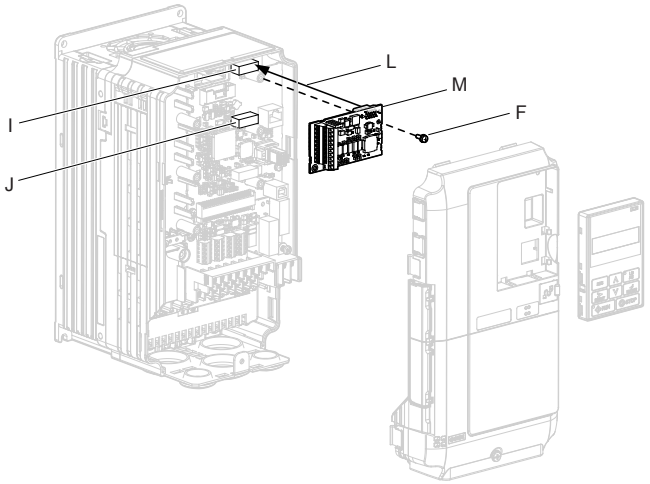

Figure 8.4 Insert the Option

3. Connect the ground wire (G) to the ground terminal (H) using one of the remaining provided screws (F). Connect the other end of the ground wire (G) to the remaining ground terminal and installation hole on the option (M) using the last remaining provided screw (F) and tighten both screws to 0.5 ~ 0.6 N m or (4.4 ~ 5.3 in lbs).

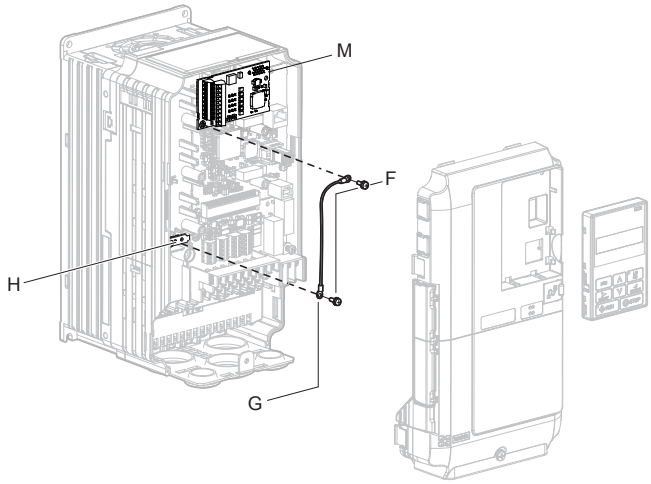

Figure 8.5 Connect the Ground Wire

Note:
1. The option package includes two ground wires. Use the longer wire when plugging the option into connector CN5-C on the drive side. Use the shorter wire when plugging the option into connector CN5-B. Refer to the Option Installation manual for more information.
2. There are two screw holes on the drive for use as ground terminals (H). When connecting three options, two ground wires will need to share the same drive ground terminal.

4. Prepare and connect the wire ends as shown in ***Figure 8.6*** and ***Figure 8.7***. ***Refer to Wire Gauges and Tightening Torques of PG-X3 Option on page 511*** or ***Refer to Wire Gauges and Tightening Torques of PG-X3 Option on page 511*** to confirm that the proper tightening torque is applied to each terminal. Take particular precaution to ensure that each wire is properly connected and that wire insulation is not accidentally pinched into electrical terminals.

WARNING! *Fire Hazard. Tighten all terminal screws according to the specified tightening torque. Loose electrical connections could result in death or serious injury by fire due to overheating electrical connections. Tightening screws beyond the specified tightening torque may result in erroneous operation, damage to the terminal block, or cause a fire.*

NOTICE: *Heat shrink tubing or electrical tape may be required to ensure that cable shielding does not contact other wiring. Insufficient insulation may cause a short circuit and damage the option or drive.*

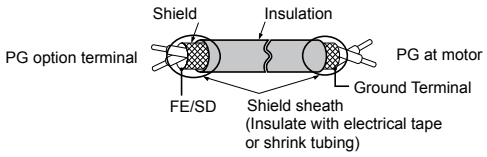

Figure 8.6 Preparing Ends of Shielded Cable

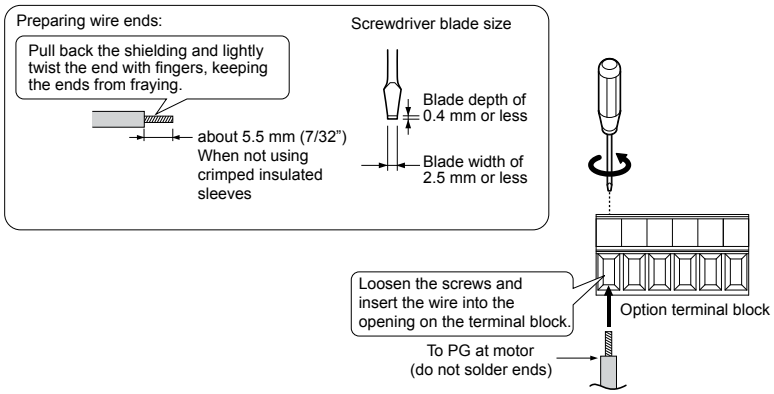

Figure 8.7 Preparing and Connecting Cable Wiring

5. Wire the motor PG encoder to the terminal block on the option. Refer to ***Figure 8.8*** and ***Figure 8.12*** for wiring instructions.

Refer to PG-B3 Option Terminal Functions on page 507 for a detailed description of the option terminal functions.

PG-B3 Parameter Settings

- Connecting a Single-Pulse Encoder in V/f with PG Control Mode: Connect the pulse output from the PG to the option and set F1-21 to 0.
- Connecting a Two-Pulse Encoder: Connect the A and B pulse outputs on the PG to the option and set F1-21 to 1.

  When using a two-pulse encoder in CLV control mode, connect pulse outputs A and B from the encoder to the corresponding terminals on the option.
- Connecting a Two-Pulse Encoder with Z Marker Pulse: Connect the A, B, and Z pulse outputs to the corresponding terminals on the option.

Control Method	V/f with PG		Closed Loop Vector	
No. of Encoders	1 (CN5-C)	2 (CN5-B)	1 (CN5-C)	2 (CN5-B)
Single Pulse (A)	F1-21 = 0	F1-37 = 0	N/A	N/A
Two Pulse (AB Quadrature)	F1-21 = 1	F1-37 = 1	No setting required	No setting required
Two Pulse with Marker (ABZ)	F1-21 = 1	F1-37 = 1	No setting required	No setting required

PG-B3 Connection Diagram

Refer to PG-B3 Option Terminal Functions on page 507 for a detailed description of the option board terminal functions.

Refer to Wire Gauges and Tightening Torques of PG-B3 Option on page 508 for information on making cables.

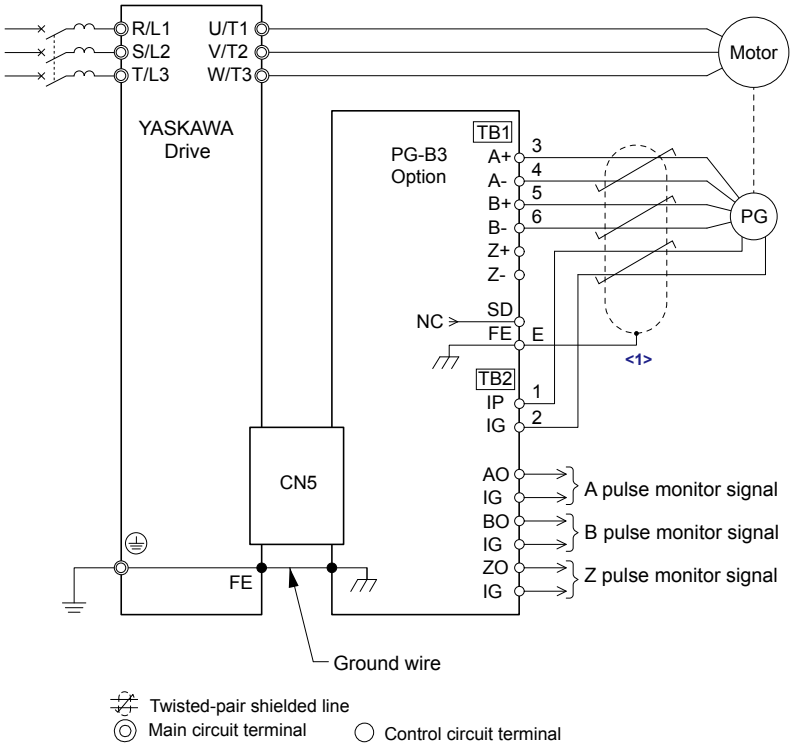

Figure 8.8 PG-B3 Option and Encoder Connection Diagram

<1> Ground the shield on the PG side and the drive side. If electrical signal interference problems arise in the PG signal, remove the shield ground from one end of the signal line or remove the shield ground connection on both ends.

Note: The PG-B3 option reads a maximum input frequency of 50 kHz from the PG encoder. Select a PG encoder with an output pulse frequency of maximum 50 kHz when operating at maximum speed.

Take the following steps to prevent erroneous operation caused by noise interference:

- Use shielded wire for the PG encoder signal lines.
- Limit the length of all motor output power cables to less than 100 m. Limit the length of open-collector output lines to less than 50 m.
- Use separate conduit or cable tray dividers to separate option control wiring, main circuit input power wiring, and motor output power cables.

PG-B3 Interface Circuit

Complementary Output

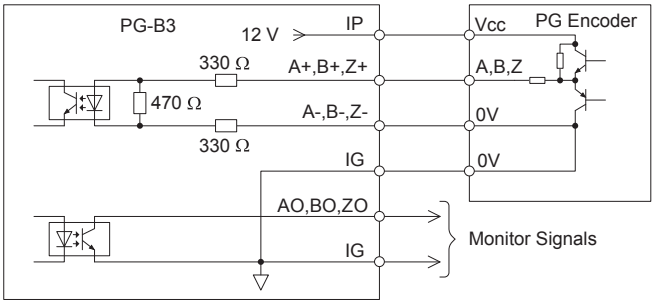

Figure 8.9 Complementary Outputs for the Interface Circuit

Open-Collector Outputs

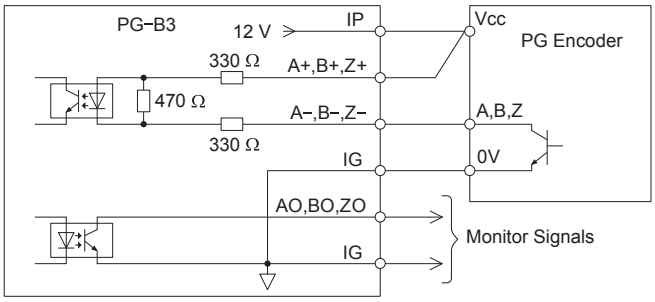

Figure 8.10 Open-Collector Outputs for the Interface Circuit

PG-B3 Terminal Functions

Table 8.3 PG-B3 Option Terminal Functions

Terminal Block		Terminal	Function	Description
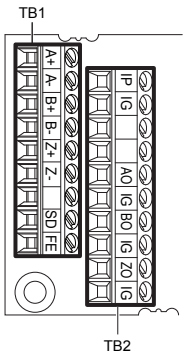	TB1	A+	A+ pulse signal input	• Pulse signal inputs from the PG • Signal inputs from complementary and open-collector outputs • Signal level H level: 8 to 12 V L level: 2.0 V or less
		A–	A– pulse signal input	
		B+	B+ pulse signal input	
		B–	B– pulse signal input	
		Z+	Z+ pulse signal input	
		Z–	Z– pulse signal input	
		SD	NC pin (open)	For use when cables shields should not be grounded
		FE	Ground	Used for grounding shielded lines
	TB2	IP	PG power supply	• Output voltage: 12.0 V ± 5% • Max output current: 200 mA <1>
		IG	PG power supply common	
		AO	A pulse monitor signal	• Outputs the monitor signal for the A, B, and Z pulses from the PG speed control card • For open collector outputs from the option • Max voltage: 24 V • Max current: 30 mA
		BO	B pulse monitor signal	
		ZO	Z pulse monitor signal	
		IG	Monitor signal common	

<1> A separate UL Listed class 2 power supply is necessary when the PG requires more than 200 mA to operate.

PG-B3 Wire Gauges and Tightening Torques

Wire gauge and torque specifications are listed in *Table 8.4*. For simpler and more reliable wiring, use crimp ferrules on the wire ends. Refer to the option manuals for the wire size and torque specifications of other options.

Table 8.4 Wire Gauges and Tightening Torques of PG-B3 Option

Terminal Signal	Screw Size	Tightening Torque N•m (in•lb)	Bare Cable		Crimp Terminals		Wire Type
			Recomm. Gauge mm²	Applicable Gauges mm²	Recomm. Gauge mm²	Applicable Gauges mm²	
A+, A–, B+, B–, Z+, Z–, FE, IP, IG	M2	0.22 to 0.25 (1.95 to 2.21)	0.75 (18 AWG)	Stranded wire: 0.25 to 1.0 (24 to 17 AWG) Solid wire: 0.25 to 1.5 (24 to 16 AWG)	0.5 (20 AWG)	0.25 to 0.5 (24 to 20 AWG)	Shielded twisted pair, etc.
AO, IG, BO, IG, ZO, IG							Shielded cable, etc.

PG-B3 Crimp Terminals

Yaskawa recommends using CRIMPFOX 6 by Phoenix Contact or equivalent crimp terminals with the specifications listed in *Table 8.5* for wiring to ensure proper connections.

Note: Properly trim wire ends so loose wire ends do not extend from the crimp terminals.

Table 8.5 Crimp Terminal Sizes

	Wire Gauge mm²	Phoenix Contact Model	L mm (in)	d1 mm (in)	d2 mm (in)
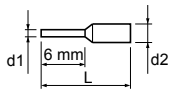	0.25 (24 AWG)	AI 0.25 - 6YE	10.5 (13/32)	0.8 (1/32)	2 (5/64)
	0.34 (22 AWG)	AI 0.34 - 6TQ	10.5 (13/32)	0.8 (1/32)	2 (5/64)
	0.5 (20 AWG)	AI 0.5 - 6WH	14 (9/16)	1.1 (3/64)	2.5 (3/32)

PG Encoder Cables for PG-B3 Option

Yaskawa recommends using a LMA-□□B-S185Y (complementary output) for cables running between the option and the PG as shown in *Figure 8.11*.

Refer to PG-B3 Option Terminal Functions on page 507 for instructions on wiring the terminal block.

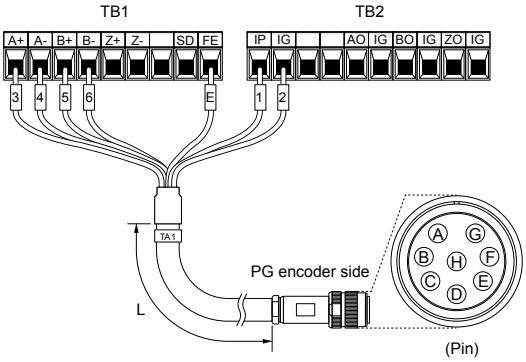

Figure 8.11 Wiring the PG Encoder Cable

Table 8.6 Connecting the PG Encoder Cable Specification

Option Terminal	PG Encoder Cable		
	Wire	Color	Pin
IP	1	Blue	C
IG	2	White	H
A+	3	Yellow	B
A–	4	White	G
B+	5	Green	A
B–	6	White	F
FE	E	N/A (shield)	D

Table 8.7 PG Encoder Cable Types

Length	Type	Length	Type
10 m (32 ft.)	W5010	50 m (164 ft.)	W5050
30 m (98 ft.)	W5030	100 m (328 ft.)	W5100

PG-X3 Parameter Settings

- Connecting a Single-Pulse Encoder in V/f with PG Control Mode: Connect the pulse output from the PG to the option and set F1-21 to 0.
- Connecting a Two-Pulse Encoder: Connect the A and B pulse outputs on the PG to the option and set F1-21 to 1.

  When using a two-pulse encoder in CLV control mode, connect pulse outputs A and B from the encoder to the corresponding terminals on the option.
- Connecting a Two-Pulse Encoder with Z Marker Pulse: Connect the A, B, and Z pulse outputs to the corresponding terminals on the option.

Control Method	V/f with PG		Closed Loop Vector	
No. of Encoders	1 (CN5-C)	2 (CN5-B)	1 (CN5-C)	2 (CN5-B)
Single Pulse (A)	F1-21 = 0	F1-37 = 0	N/A	N/A
Two Pulse (AB Quadrature)	F1-21 = 1	F1-37 = 1	No setting required	No setting required
Two Pulse with Marker (ABZ)	F1-21 = 1	F1-37 = 1	No setting required	No setting required

PG-X3 Connection Diagram

Refer to PG-X3 Option Terminal Functions on page 510 for a detailed description of the option board terminal functions.

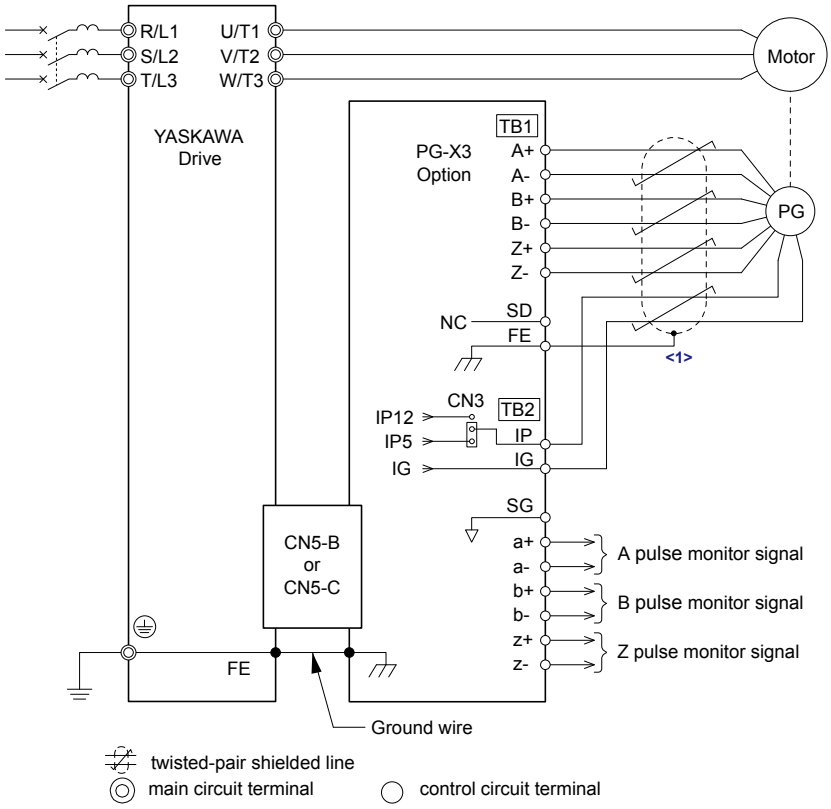

Figure 8.12 PG-X3 Option and Encoder Connection Diagram

<1> Ground the shield on the PG side and the drive side. If electrical signal interference problems arise in the PG signal, remove the shield ground from one end of the signal line or remove the shield ground connection on both ends.

Note: The PG-X3 option reads a maximum input frequency of 300 kHz from the PG encoder. Select a PG encoder with an output pulse frequency of maximum 300 kHz when operating at maximum speed.

Take the following steps to prevent erroneous operation caused by noise interference:

- Use shielded wire for the PG encoder signal lines.

- Use separate conduit or cable tray dividers to separate option control wiring, main circuit input power wiring, and motor output power cables.

PG-X3 Interface Circuit

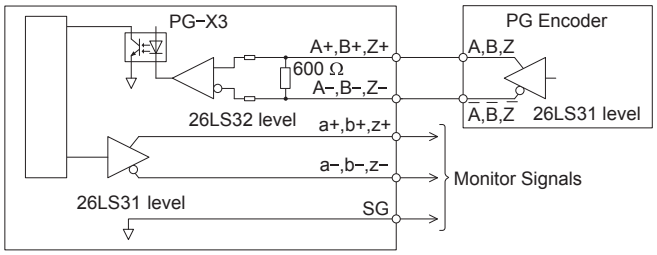

Figure 8.13 PG-X3 Interface Circuit

PG-X3 Terminal Functions

Table 8.8 PG-X3 Option Terminal Functions

Terminal Block		Terminal	Function	Description
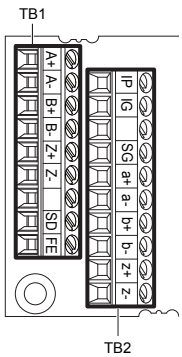	TB1	A+	A pulse signal input	• Inputs for the A channel, B channel, and Z pulses from the PG encoder • Signal level matches RS-422
		A–	A inverse pulse signal input	
		B+	B pulse signal input	
		B–	B inverse pulse signal input	
		Z+	Z pulse signal input	
		Z–	Z inverse pulse signal input	
		SD	NC pin (open)	Open connection port for use when cable shields should not be grounded
		FE	Ground	Used as the shield ground termination point.
	TB2	IP	PG encoder power supply	• Output voltage: 12.0 V ± 5% or 5.5 V ± 5% • Max. output current: 200 mA <1>
		IG	PG encoder power supply common	
		SG	Monitor signal common	• Output signal for monitoring A channel, B channel, and Z pulses from the PG encoder • Signal level matches RS-422
		a+	A pulse monitor signal	
		a–	A pulse inverse monitor signal	
		b+	B pulse monitor signal	
		b–	B pulse inverse monitor signal	
		z+	Z pulse monitor signal	
		z–	Z pulse inverse monitor signal	

<1> A separate UL Listed class 2 power supply is necessary when the PG requires more than 200 mA to operate.

PG Encoder Power Supply Voltage

For the PG-X3 option, set the voltage for the PG encoder power supply using jumper CN3 located on the option. Position the jumper as shown in ***Table 8.9*** to select the voltage level.

NOTICE: *The positioning of jumper CN3 selects the PG encoder power supply voltage (5.5 V or 12 V). Select the voltage level for the PG encoder connected to the option and motor. If the wrong voltage is selected, the PG encoder may not operate properly or may become damaged as a result.*

Table 8.9 Setting the PG Encoder Power Supply Voltage (IP) with Jumper CN3

Voltage Level	5.5 V ± 5% (default)	12.0 V ± 5%
Jumper CN3	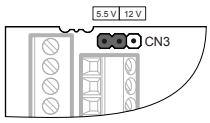	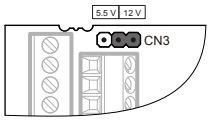

PG-X3 Wire Gauges and Tightening Torques

Wire gauge and torque specifications are listed in ***Table 8.10***. For simpler and more reliable wiring, use crimp ferrules on the wire ends. Refer to the option manuals for the wire size and torque specifications of other options.

Table 8.10 Wire Gauges and Tightening Torques of PG-X3 Option

Terminal Signal	Screw Size	Tightening Torque N•m (in•lb)	Bare Cable		Crimp Terminals		Wire Type
			Recomm. Gauge mm²	Applicable Gauges mm²	Recomm. Gauge mm²	Applicable Gauges mm²	
A+, A–, B+, B–, Z+, Z–, SD, FE, IP, IG	M2	0.22 to 0.25 (1.95 to 2.21)	0.75 (18 AWG)	Stranded wire: 0.25 to 1.0 (24 to 17 AWG) Solid wire: 0.25 to 1.5 (24 to 16 AWG)	0.5 (20 AWG)	0.25 to 0.5 (24 to 20 AWG)	Shielded twisted pair, etc.
a+, a–, b+, b–, z+, z–, SG							Shielded cable, etc.

PG-X3 Crimp Terminals

Yaskawa recommends using CRIMPFOX 6 by Phoenix Contact or equivalent crimp terminals with the specifications listed in *Table 8.11* for wiring to ensure proper connections.

Note: Properly trim wire ends so loose wire ends do not extend from the crimp terminals.

Table 8.11 Crimp Terminal Sizes

	Wire Gauge mm²	Phoenix Contact Model	L mm (in)	d1 mm (in)	d2 mm (in)
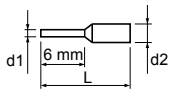	0.25 (24 AWG)	AI 0.25 - 6YE	10.5 (13/32)	0.8 (1/32)	2 (5/64)
	0.34 (22 AWG)	AI 0.34 - 6TQ	10.5 (13/32)	0.8 (1/32)	2 (5/64)
	0.5 (20 AWG)	AI 0.5 - 6WH	14 (9/16)	1.1 (3/64)	2.5 (3/32)

Replacing the Drive Covers and Digital Operator and Checking for Proper Motor Rotation

1. Route the option wiring.

Depending on the drive model, some drives may require routing the wiring through the side of the front cover to the outside to provide adequate space for the wiring. In these cases, using diagonal cutting pliers, cut out the perforated openings on the left side of the drive front cover. Sharp edges along the cut out should be smoothed down with a file or sand paper to prevent any damage to the wires.

Route the communication wiring inside the enclosure for drives that do not require routing through the front cover. Refer to *Table 8.12* and *Figure 8.14* to determine the proper wire routing by drive model.

Table 8.12 Communication Wire Routing Selection

Drive Series	Model	Wire Routing <1>	
		Through Front Cover	Inside Drive
A1000	Models 2A0004 to 2A0040; 4A0002 to 4A0023; 5A0003 to 5A0011	*Figure 8.14* (A)	–
A1000	Models 2A0056 and above; 4A0031 and above; 5A0023 and above	–	*Figure 8.14* (B)

<1> Refer to *Figure 8.14* for examples of the different wire routing techniques.

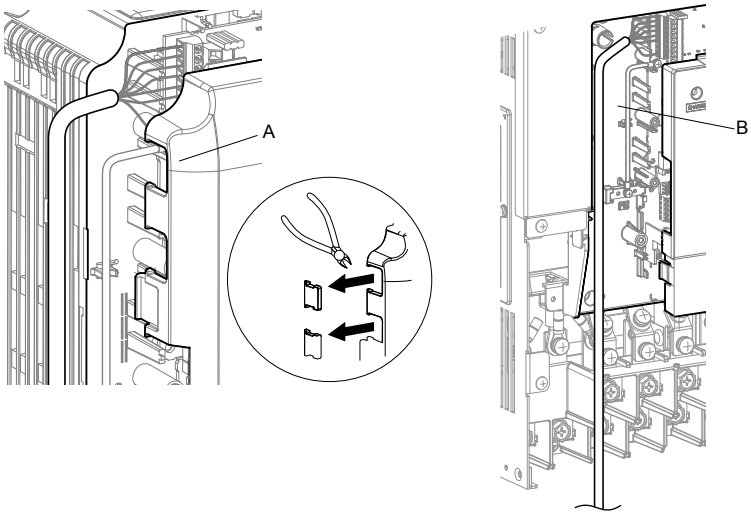

A – Route wires through the openings provided on the left side of the front cover. *<1>*

B – Use the open space provided inside the drive to route option wiring.

Figure 8.14 Wire Routing Examples

<1> The drive will not meet NEMA 1, UL Type 1 requirements if wiring is exposed outside the enclosure.

2. Replace and secure the front covers of the drive (A, D) and replace the digital operator (B).

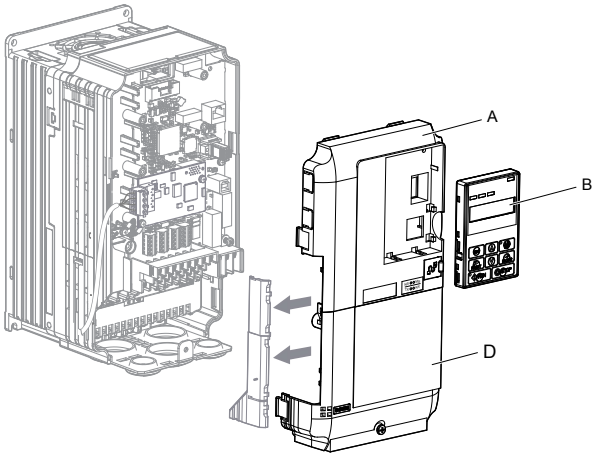

Figure 8.15 Replace the Front Covers and Digital Operator

Note: Take proper precautions when wiring the option so that the front covers will easily fit back onto the drive. Make sure no cables are pinched between the front covers and the drive when replacing the covers.

3. Set drive parameters for proper motor rotation. (***Refer to A1: Initialization on page 559*** and ***Refer to F1: PG Speed Control Card (PG-B3, PG-X3, PG-RT3, PG-F3) on page 591*** for details on parameter settings) With a two-pulse or three-pulse PG encoder, the leading pulse determines the motor rotation direction. A PG encoder signal with leading A pulse is considered to be rotating forward (counterclockwise when viewing rotation from motor load side).

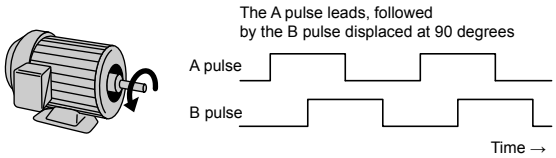

Figure 8.16 Displacement of A and B Pulses

After connecting the PG encoder outputs to the option, apply power to the drive and manually rotate the motor and check the rotation direction by viewing monitor U1-05 on the digital operator.

Reverse motor rotation is indicated by a negative value for U1-05; forward motor rotation is indicated by a positive value.

If monitor U1-05 indicates that the forward direction is opposite of what is intended, set F1-05 or F1-32 to 1 or reverse the two A pulse wires with the two B pulse wires on option terminal TB1 as shown in ***Figure 8.17***.

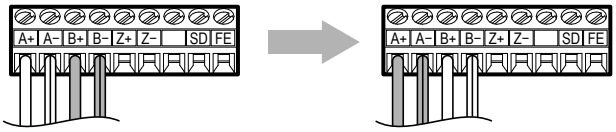

Figure 8.17 A Channel and B Channel Wire Switching

Please note that when the drive is initialized using A1-03 =1110, 2220, 3330, the value for F1-05/F1-32 will reset to factory default and the parameter will need to be readjusted to switch the direction.

8.5 Installing Peripheral Devices

This section describes the proper steps and precautions to take when installing or connecting various peripheral devices to the drive.

NOTICE: *Use a class 2 power supply when connecting to the control terminals. Improper application of peripheral devices could result in drive performance degradation due to improper power supply. Refer to NEC Article 725 Class 1, Class 2, and Class 3 Remote-Control, Signaling, and Power Limited Circuits for requirements concerning class 2 power supplies.*

◆ Dynamic Braking Options

Dynamic braking (DB) helps bring the motor to a smooth and rapid stop when working with high inertia loads. As the drive lowers the frequency of a motor moving a high inertia load, regeneration occurs. This can cause an overvoltage situation when the regenerative energy flows back into the DC bus capacitors. A braking resistor prevents these overvoltage faults.

NOTICE: *Do not allow unqualified personnel to use the product. Failure to comply could result in damage to the drive or braking circuit. Carefully review the braking resistor instruction manual when connecting a braking resistor option to the drive.*

Note:
1. Properly size the braking circuit to dissipate the power required to decelerate the load in the desired time. Ensure that the braking circuit can dissipate the energy for the set deceleration time prior to running the drive.
2. Set L8-55 to 0 to disable the internal braking transistor of the drive protection when using braking resistor options.
3. Set L3-04 to 0 to disable Stall Prevention during deceleration when using a regenerative converter, a regenerative unit, a braking resistor, or the Braking Resistor Unit. The default setting for the Stall Prevention function (enabled) will interfere with the braking resistor.

WARNING! *Fire Hazard. The braking resistor connection terminals are B1 and B2. Do not connect a braking resistor directly to any other terminals. Improper wiring connections could result in death or serious injury by fire. Failure to comply may result in damage to the braking circuit or drive.*

NOTICE: *Connect braking resistors to the drive as shown in the I/O wiring examples. Improperly wiring braking circuits could result in damage to the drive or equipment.*

■ Installing a Braking Resistor: ERF type

ERF type braking resistors provide dynamic braking capability with up to 3% ED. They can be directly connected to the B1 and B2 terminals of the drive as shown in ***Figure 8.18***.

Enable the drive braking resistor overload protection by setting L8-01 to 1 when using ERF type resistors.

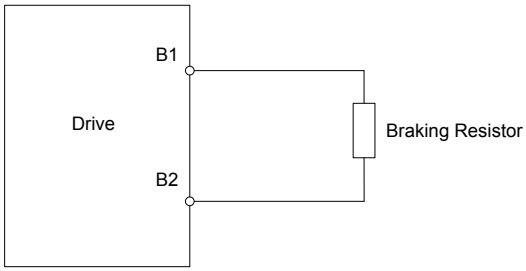

Figure 8.18 Connecting a Braking Resistor: ERF Type

■ Installing a Braking Resistor Unit: LKEB type

LKEB type braking resistors provide dynamic braking capability with up to 10% ED. They can be directly connected to the drives B1 and B2 terminals as shown in ***Figure 8.19***. The LKEB unit has a thermal overload contact that should be utilized in order to switch off the drive in case braking resistor overheat occurs.

The internal braking resistor overload protection of the drive cannot protect LKEB resistors. Set L8-01 to 0 to disable this function.

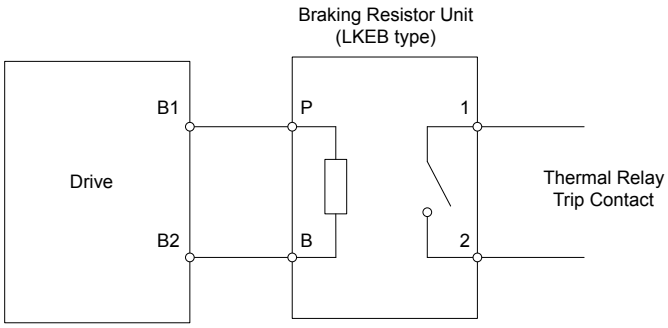

Figure 8.19 Connecting a Braking Resistor Unit: LKEB Type (Models 2A0004 to 2A0138, 4A0002 to 4A0072, and 5A0003 to 5A0052)

■ Installing Other Types of Braking Resistors

When installing braking resistors other than the ERF or LKEB types, make sure that the drive internal braking transistor will not be overloaded with the required duty cycle and the selected resistance value. Use a resistor that is equipped with a thermal overload relay contact, and utilize this contact to switch off the drive in case of braking resistor overheat.

■ Braking Resistor Overload Protection

WARNING! *Fire Hazard. Set up the sequence to shut off the power at the thermal relay trip contact on the braking resistor unit as shown in* ***Figure 8.20*** *to protect the braking resistor unit from overheating. Failure to comply may cause serious injury or death.*

If the drive must be energized to investigate the cause of the problem, disconnect the braking resistor unit before energizing the drive.

If the drive was de-energized, identify the cause of the problem before re-energizing the drive.

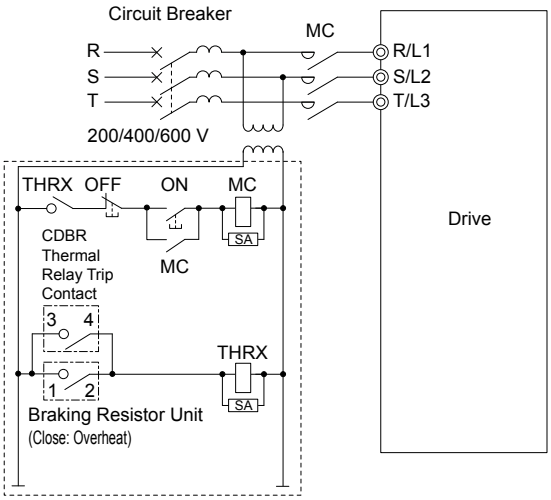

Figure 8.20 Power Supply Interrupt for Overheat Protection (Example)

■ Installing a Braking Unit: CDBR Type

To install a CDBR type braking unit, connect the ⊕3 terminal of the drive to the positive terminal on the braking unit.

Next, wire together the negative terminals on the drive and braking unit. Terminal ⊕2 is not used.

Connect the braking resistor to CDBR terminals ⊕0 and ⊖0. Refer to ***Figure 8.20*** and ***Figure 8.21*** for proper configuration.

Wire the thermal overload relay normally open contacts of the CDBR and the braking resistor in parallel, and connect this signal to a control circuit as shown in ***Figure 8.20*** to interrupt the main input power supply to the drive in the event of a CDBR or braking resistor overload.

Set L8-55 to 0 to disable dynamic braking transistor protection.

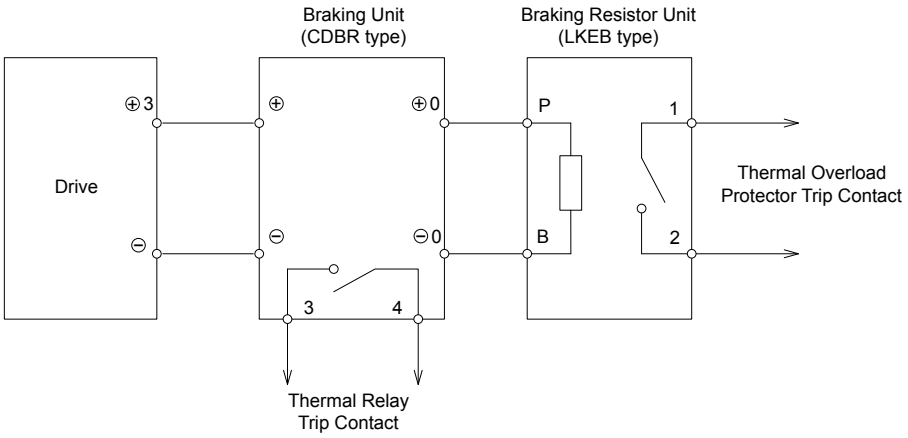

Figure 8.21 Connecting a Braking Unit (CDBR type) and Braking Resistor Unit (LKEB type) Models 2A0169 to 2A0415, 4A0088 to 4A1200 and 5A0125 to 5A0242

Note: To install a CDBR type braking unit to the drive with a built-in dynamic braking transistor (models 2A0004 to 2A0138, 4A0002 to 4A0072, and 5A0003 to 5A0052), connect the drive B1 terminal to the positive terminal on the braking unit. Next, wire the negative terminals on the drive and braking unit together. Terminal B2 is not used.

■ Using Braking Units in Parallel

When using multiple braking units, install the braking units with a master-slave configuration with a single braking unit acting as the master. ***Figure 8.22*** illustrates how to wire braking units in parallel.

Wire the normally open thermal overload contact relays of all CDBRs and all braking resistors in parallel, then connect this signal to a control circuit as shown in ***Figure 8.20*** to interrupt the main input power supply to the drive in the event of a CDBR or braking resistor overload.

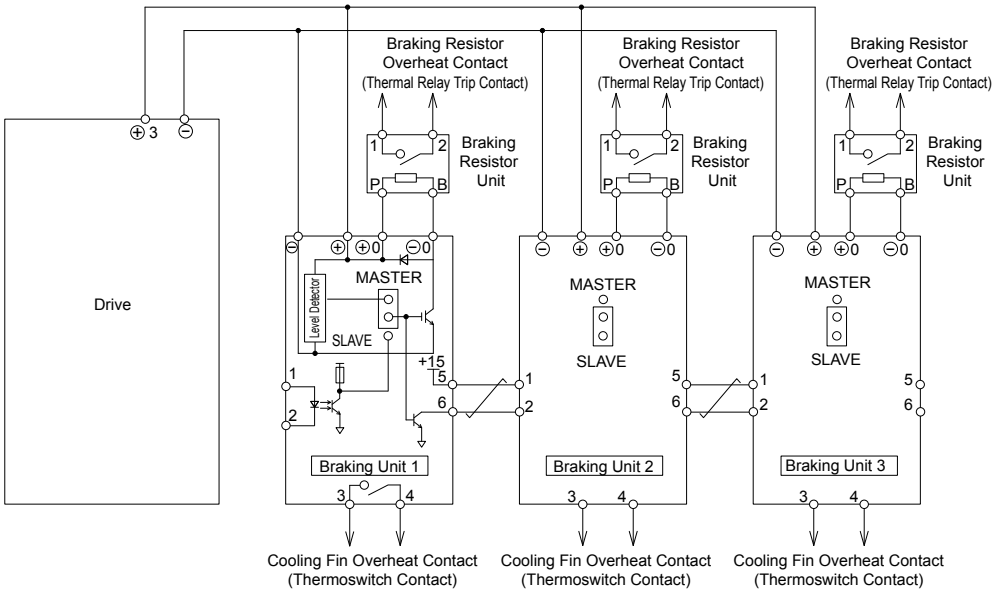

Figure 8.22 Connecting Braking Units in Parallel

◆ Installing a Molded Case Circuit Breaker (MCCB) or Ground Fault Circuit Interrupter (GFCI)

Install an MCCB or GFCI for line protection between the power supply and the main circuit power supply input terminals R/L1, S/L2, and T/L3. This protects the main circuit and devices wired to the main circuit while also providing overload protection.

NOTICE: *Prevent Equipment Damage. Install a fuse and a GFCI to models 4A0930 and 4A1200, Failure to comply may result in damage to the power supply in the event of a short circuit.*

Consider the following when selecting and installing an MCCB or GFCI:

- The capacity of the MCCB or GFCI should be 1.5 to 2 times the rated output current of the drive. Use an MCCB or GFCI to keep the drive from faulting out instead of using overheat protection (150% for one minute at the rated output current).
- If several drives are connected to one MCCB or GFCI that is shared with other equipment, use a sequence that shuts the power OFF when errors are output by using magnetic contactor (MC) as shown in ***Figure 8.23***.

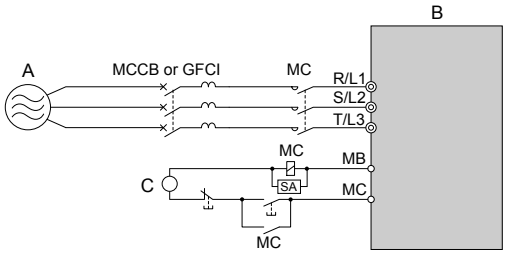

A – Power supply
B – Drive
C – Control power supply

Figure 8.23 Power Supply Interrupt Wiring (Example)

WARNING! *Electrical Shock Hazard. Disconnect the MCCB (or GFCI) and MC before wiring terminals. Failure to comply may result in serious injury or death.*

■ Application Precautions when Installing a GFCI

Drive outputs generate high-frequency leakage current as a result of high-speed switching. Install a GFCI on the input side of the drive to switch off potentially harmful leakage current.

Factors in determining leakage current:

- Size of the AC drive
- AC drive carrier frequency
- Motor cable type and length
- EMI/RFI filter

If the GFCI trips spuriously, consider changing these items or use a GFCI with a higher trip level.

Note: Choose a GFCI designed specifically for an AC drive. The operation time should be at least 0.1 s with sensitivity amperage of at least 200 mA per drive. The output waveform of the drive and built-in EMC filter may cause an increase in leakage current. This may in turn cause the leakage breaker to malfunction. Increase the sensitivity amperage or lower the carrier frequency to correct the problem.

◆ Installing a Magnetic Contactor at the Power Supply Side

Install a magnetic contactor (MC) to the drive input for the purposes explained below.

■ Disconnecting the Power Supply

Shut off the drive with an MC when a fault occurs in any external equipment such as braking resistors.

NOTICE: *Do not connect electromagnetic switches or MCs to the output motor circuits without proper sequencing. Improper sequencing of output motor circuits could result in damage to the drive.*

NOTICE: *Install an MC on the input side of the drive when the drive should not automatically restart after power loss. To get the full performance life out of the electrolytic capacitors and circuit relays, refrain from switching the drive power supply off and on more than once every 30 minutes. Frequent use can damage the drive. Use the drive to stop and start the motor.*

NOTICE: *Use a magnetic contactor (MC) to ensure that power to the drive can be completely shut off when necessary. The MC should be wired so that it opens when a fault output terminal is triggered.*

Note:
1. Install an MC to the drive input side to prevent the drive from restarting automatically when power is restored after momentary power loss.
2. Set up a delay that prevents the MC from opening prematurely to continue operating the drive through a momentary power loss.

■ Protecting the Braking Resistor or Braking Resistor Unit

Use an MC on the input side of the drive to protect a braking resistor or braking resistor unit from overheat or fire.

WARNING! *Fire Hazard. When using a braking unit, use a thermal relay on the braking resistors and configure a fault contact output for the braking resistor unit to disconnect drive main power via an input contactor. Inadequate braking circuit protection could result in death or serious injury by fire from overheating resistors.*

◆ Connecting an AC Reactor or DC Link Choke

AC reactors and DC link chokes suppress surges in current and improve the power factor on the input side of the drive.

Use an AC reactor, a DC link choke, or both in the following situations:

- To suppress harmonic current or improve the power factor of the power supply.
- When using a phase advancing capacitor switch.
- With a large capacity power supply transformer (over 600 kVA).

Note: Use an AC reactor or DC link choke when also connecting a thyristor converter (such as a DC drive) to the same power supply system, regardless of the conditions of the power supply.

■ Connecting an AC Reactor

Note: Set C6-02 to 1 (Carrier Frequency Selection to 2.0 kHz) when connecting an AC reactor to the output side (secondary side) of the drive.

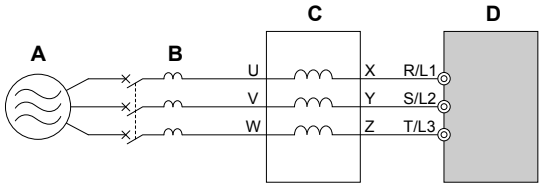

A – Power supply
B – MCCB
C – AC reactor
D – Drive

Figure 8.24 Connecting an AC Reactor

■ Connecting a DC Link Choke

A DC link choke can be installed to drive models 2A0004 to 2A0081, 4A0002 to 4A0044, and 5A0003 to 5A0032. When installing a DC link choke, remove the jumper between terminals ⊕1 and ⊕2 (terminals are jumpered for shipment). The jumper must be installed if not using a DC link choke. Refer to ***Figure 8.25*** for an example of DC link choke wiring.

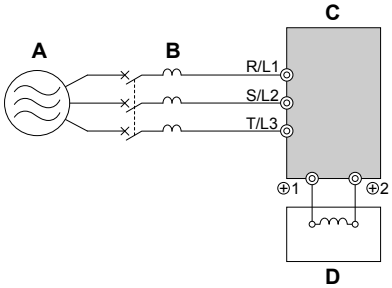

A – Power supply
B – MCCB
C – Drive
D – DC link choke

Figure 8.25 Connecting a DC Link Choke

◆ Connecting a Surge Absorber

A surge absorber suppresses surge voltage generated from switching an inductive load near the drive. Inductive loads include magnetic contactors, relays, valves, solenoids, and brakes. Always use a surge absorber or diode when operating with an inductive load.

WARNING! *Fire Hazard. Due to surge absorber short circuit on drive output terminals U/T1, V/T2, and W/T3, do not connect surge absorbers to the drive output power terminals. Failure to comply may result in serious injury or death by fire or flying debris.*

◆ Connecting a Noise Filter

■ Input-Side Noise Filter

Drive outputs generate noise as a result of high-speed switching. This noise flows from inside the drive back to the power supply, possibly affecting other equipment. Installing a noise filter to the input side of the drive can reduce the amount of noise flowing back into the power supply. This also prevents noise from entering the drive from the power supply.

- Use a noise filter specifically designed for AC drives.
- Install the noise filter as close as possible to the drive.

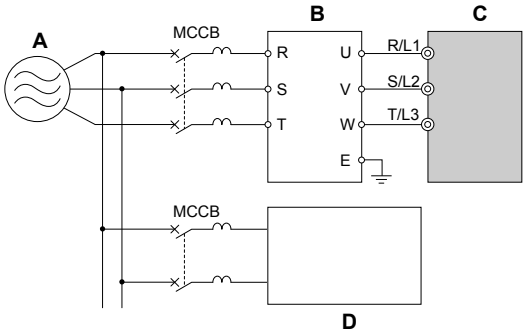

A – Power supply
B – Input-side noise filter (model LNFD-□□)
C – Drive
D – Other control device

Figure 8.26 Input-Side Noise Filter (Three-Phase 200/400 V)

200 V Class and 400 V Class drive models are tested according to European standards IEC/EN 61800-5-1 and comply with EMC guidelines. ***Refer to EMC Guidelines Compliance on page 742*** for details on EMC filter selection and installation.

■ Output-Side Noise Filter

A noise filter on the output side of the drive reduces inductive noise and radiated noise. ***Figure 8.27*** illustrates an example of output-side noise filter wiring.

NOTICE: *Do not connect phase-advancing capacitors or LC/RC noise filters to the output circuits. Improper application of noise filters could result in damage to the drive.*

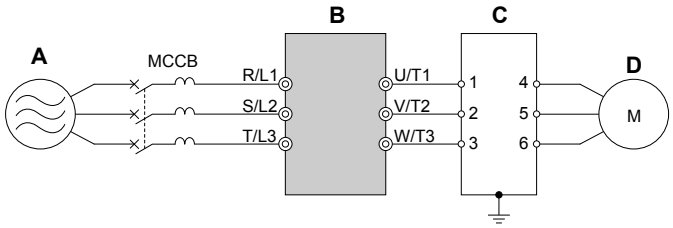

A – Power supply
B – Drive
C – Output-side noise filter
D – Motor

Figure 8.27 Output-Side Noise Filter

- **Radiated Noise:** Electromagnetic waves radiated from the drive and cables create noise throughout the radio bandwidth that can affect surrounding devices.
- **Induced Noise:** Noise generated by electromagnetic induction can affect the signal line and may cause the controller to malfunction.

Preventing Induced Noise

Use a noise filter on the output side or use shielded cables. Lay the cables at least 30 cm away from the signal line to prevent induced noise.

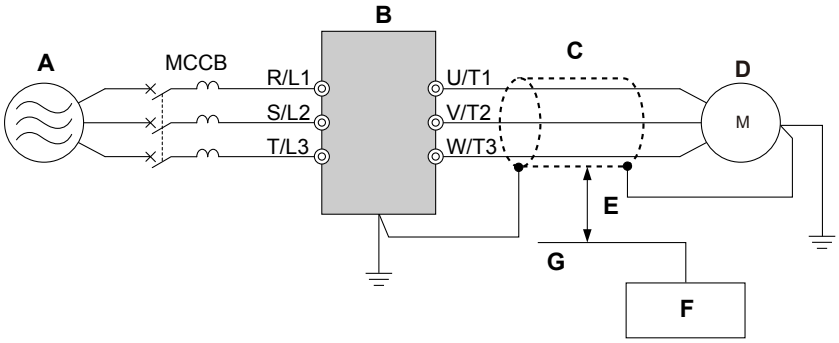

A – Power supply
B – Drive
C – Shielded motor cable
D – Motor
E – Separate at least 30 cm
F – Controller
G – Signal line

Figure 8.28 Preventing Induced Noise

Reducing Radiated and Radio Frequency Noise

The drive, input lines, and output lines generate radio frequency noise. Use noise filters on input and output sides and install the drive in a metal enclosure panel to reduce radio frequency noise.

Note: The cable running between the drive and motor should be as short as possible.

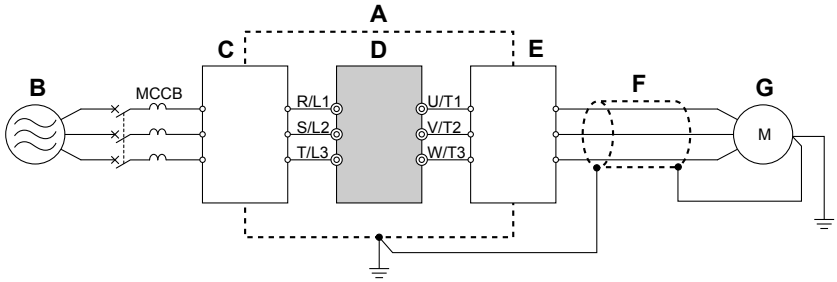

A – Metal enclosure
B – Power supply
C – Noise filter
D – Drive
E – Noise filter
F – Shielded motor cable
G – Motor

Figure 8.29 Reducing Radio Frequency Noise

◆ Installing Input Fuses

NOTICE: *If a fuse is blown or a Ground Fault Circuit Interrupter (GFCI) is tripped, check the wiring and the selection of the peripheral devices to identify the cause. Contact Yaskawa before restarting the drive or the peripheral devices if the cause cannot be identified.*

■ Factory Recommended Branch Circuit Protection

Yaskawa recommends installing one of the following types of branch circuit protection to maintain compliance with UL508C. Semiconductor protective type fuses are preferred. Alternate branch circuit protection devices are also listed in *Table 8.13* and *Table 8.14*.

Table 8.13 Factory Recommended Drive Branch Circuit Protection (Normal Duty)

Drive Model	Normal Duty					
	Nominal Output Power HP	AC Drive Input Amps	MCCB Rating Amps <1>	Time Delay Fuse Rating Amps <2>	Non-time Delay Fuse Rating Amps <3>	Bussmann Semi-conductor Fuse Rating (Fuse Ampere) <4>
200 V Class						
2A0004	0.75	3.9	15	6.25	10	FWH-70B (70)
2A0006	1 - 1.5	7.3	15	12	20	FWH-70B (70)
2A0008	2	8.8	15	15	25	FWH-70B (70)
2A0010	3	10.8	20	17.5	30	FWH-70B (70)

Drive Model	Normal Duty					
	Nominal Output Power HP	AC Drive Input Amps	MCCB Rating Amps <1>	Time Delay Fuse Rating Amps <2>	Non-time Delay Fuse Rating Amps <3>	Bussmann Semi-conductor Fuse Rating (Fuse Ampere) <4>
2A0012	3	13.9	25	20	40	FWH-70B (70)
2A0018	5	18.5	35	30	50	FWH-90B (90)
2A0021	7.5	24	45	40	70	FWH-90B (90)
2A0030	10	37	60	60	110	FWH-100B (100)
2A0040	15	52	100	90	150	FWH-200B (200)
2A0056	20	68	125	110	200	FWH-200B (200)
2A0069	25	80	150	125	225	FWH-200B (200)
2A0081	30	96	175	150	275	FWH-300A (300)
2A0110	40	111	200	175	300	FWH-300A (300)
2A0138	50	136	250	225	400	FWH-350A (350)
2A0169	60	164	300	250	450	FWH-400A (400)
2A0211	75	200	400	350	600	FWH-400A (400)
2A0250	100	271	500	450	800	FWH-600A (600)
2A0312	125	324	600	500	800	FWH-700A (700)
2A0360	150	394	700	600	1000 <5>	FWH-800A (800)
2A0415	175	471	900	800	1400 <5>	FWH-1000A (1000)
400 V Class						
4A0002	1	2.1	15	3.5	6	FWH-40B (40)
4A0004	2	4.3	15	7.5	12	FWH-50B (50)
4A0005	3	5.9	15	10	17.5	FWH-70B (70)
4A0007	3	8.1	15	12	20	FWH-70B (70)
4A0009	5	9.4	15	15	25	FWH-90B (90)
4A0011	7.5	14	25	20	40	FWH-90B (90)
4A0018	10	20	40	35	60	FWH-80B (80)
4A0023	15	24	45	40	70	FWH-100B (100)
4A0031	20	38	75	60	110	FWH-125B (125)
4A0038	25	44	75	75	125	FWH-200B (200)
4A0044	30	52	100	90	150	FWH-250A (250)
4A0058	40	58	100	100	150	FWH-250A (250)
4A0072	50	71	125	110	200	FWH-250A (250)
4A0088	60	86	150	150	250	FWH-250A (250)
4A0103	75	105	200	175	300	FWH-250A (250)
4A0139	100	142	250	225	400	FWH-350A (350)
4A0165	125	170	300	250	500	FWH-400A (400)
4A0208	150	207	400	350	600	FWH-500A (500)
4A0250	200	248	450	400	700	FWH-600A (600)
4A0296	250	300	600	500	800	FWH-700A (700)
4A0362	300	346	600	600	1000 <5>	FWH-800A (800)
4A0414	350	410	800	700	1200 <5>	FWH-800A (800)
4A0515	400 - 450	465	900	800	1350 <5>	FWH-1000A (1000)
4A0675	500 - 600	657	1200	1100 <5>	1800 <5>	FWH-1200A (1200)
4A0930	700 - 800	922	Not Applicable			FWH-1200A (1200)
4A1200	900 - 1000	1158				FWH-1600A (1600)
600 V Class						
5A0003	2	3.6	15	6.25	10	FWP-50B (50)
5A0004	3	5.1	15	8	15	FWP-50B (50)

Drive Model	Normal Duty					
	Nominal Output Power HP	AC Drive Input Amps	MCCB Rating Amps <1>	Time Delay Fuse Rating Amps <2>	Non-time Delay Fuse Rating Amps <3>	Bussmann Semi-conductor Fuse Rating (Fuse Ampere) <4>
5A0006	5	8.3	15	12	20	FWP-60B (60)
5A0009	7.5	12	20	20	35	FWP-60B (60)
5A0011	10	16	30	25	45	FWP-70B (70)
5A0017	15	23	40	40	60	FWP-100B (100)
5A0022	20	31	60	50	90	FWP-100B (100)
5A0027	25	38	75	60	110	FWP-125A (125)
5A0032	30	45	75	75	125	FWP-125A (125)
5A0041	40	44	75	75	125	FWP-175A (175)
5A0052	50	54	100	90	150	FWP-175A (175)
5A0062	60	66	125	110	175	FWP-250A (250)
5A0077	75	80	150	125	225	FWP-250A (250)
5A0099	100	108	175	175	300	FWP-250A (250)
5A0125	125	129	225	225	350	FWP-350A (350)
5A0145	150	158	300	275	450	FWP-350A (350)
5A0192	200	228	400	350	600	FWP-600A (600)
5A0242	250	263	500	450	700	FWP-600A (600)

<1> Maximum MCCB Rating is 15 A, or 200 % of drive input current rating, whichever is larger. MCCB voltage rating must be 600 VAC or greater.

<2> Maximum Time Delay fuse is 175% of drive input current rating. This covers any Class CC, J or T class fuse.

<3> Maximum Non-time Delay fuse is 300% of drive input current rating. This covers any CC, J or T class fuse.

<4> When using semiconductor fuses, Bussman FWH and FWP are required for UL compliance. Select FWH for 200 V Class and 400 V Class models and FWP fuses for 600 V models.

<5> Class L fuse is also approved for this rating.

Table 8.14 Factory Recommended Drive Branch Circuit Protection (Heavy Duty)

Drive Model	Heavy Duty					
	Nominal Output Power HP	AC Drive Input Amps	MCCB Rating Amps <1>	Time Delay Fuse Rating Amps <2>	Non-time Delay Fuse Rating Amps <3>	Bussmann Semi-conductor Fuse Rating (Fuse Ampere) <4>
200 V Class						
2A0004	0.75	2.9	15	5	8	FWH-70B (70)
2A0006	1	5.8	15	10	15	FWH-70B (70)
2A0008	2	7	15	12	17.5	FWH-70B (70)
2A0010	2	7.5	15	12	20	FWH-70B (70)
2A0012	3	11	20	17.5	30	FWH-70B (70)
2A0018	3	15.6	25	25	40	FWH-90B (90)
2A0021	5	18.9	35	30	50	FWH-90B (90)
2A0030	7.5	28	50	40	75	FWH-100B (100)
2A0040	10	37	60	60	100	FWH-200B (200)
2A0056	15	52	100	90	150	FWH-200B (200)
2A0069	20	68	125	110	200	FWH-200B (200)
2A0081	25	80	150	125	225	FWH-300A (300)
2A0110	30	82	150	125	225	FWH-300A (300)
2A0138	40	111	200	175	250	FWH-350A (350)
2A0169	50	136	250	225	350	FWH-400A (400)
2A0211	60	164	300	250	450	FWH-400A (400)
2A0250	75	200	400	350	600	FWH-600A (600)
2A0312	100	271	500	450	800	FWH-700A (700)

Drive Model	Heavy Duty					
	Nominal Output Power HP	AC Drive Input Amps	MCCB Rating Amps <1>	Time Delay Fuse Rating Amps <2>	Non-time Delay Fuse Rating Amps <3>	Bussmann Semi-conductor Fuse Rating (Fuse Ampere) <4>
2A0360	125	324	600	500	900 <4>	FWH-800A (800)
2A0415	150	394	700	600	1100 <4>	FWH-1000A (1000)
400 V Class						
4A0002	0.75	1.8	15	3	5	FWH-40B (40)
4A0004	1 - 2	3.2	15	5	9	FWH-50B (50)
4A0005	3	4.4	15	7	12	FWH-70B (70)
4A0007	3	6	15	10	17.5	FWH-70B (70)
4A0009	5	8.2	15	12	20	FWH-90B (90)
4A0011	5	10.4	20	17.5	30	FWH-90B (90)
4A0018	7.5 - 10	15	30	25	40	FWH-80B (80)
4A0023	10	20	40	35	60	FWH-100B (100)
4A0031	15	29	50	50	80	FWH-125B (125)
4A0038	20	39	75	60	110	FWH-200B (200)
4A0044	25 - 30	47	75	75	125	FWH-250A (250)
4A0058	30	43	75	75	125	FWH-250A (250)
4A0072	40	58	100	100	150	FWH-250A (250)
4A0088	60	71	125	110	200	FWH-250A (250)
4A0103	60	86	150	150	250	FWH-250A (250)
4A0139	75	105	175	175	300	FWH-350A (350)
4A0165	100	142	225	225	400	FWH-400A (400)
4A0208	125 - 150	170	250	250	500	FWH-500A (500)
4A0250	150	207	350	350	600	FWH-600A (600)
4A0296	200	248	400	400	700	FWH-700A (700)
4A0362	250	300	500	500	800	FWH-800A (800)
4A0414	300	346	600	600	1000 <4>	FWH-800A (800)
4A0515	350	410	700	700	1200 <4>	FWH-1000A (1000)
4A0675	400 - 500	584	1000	1000 <4>	1600 <4>	FWH-1200A (1200)
4A0930	600 - 700	830	Not Applicable			FWH-1200A (1200)
4A1200	800 - 900	1031				FWH-1600A (1600)
600 V Class						
5A0003	1	1.9	15	3	5	FWP-50B (50)
5A0004	2	3.6	15	6.25	10	FWP-50B (50)
5A0006	3	5.1	15	8	15	FWP-60B (60)
5A0009	5	8.3	15	12	20	FWP-60B (60)
5A0011	7.5	12	20	20	35	FWP-70B (70)
5A0017	10	16	30	25	45	FWP-100B (100)
5A0022	15	23	40	40	60	FWP-100B (100)
5A0027	20	31	60	50	90	FWP-125A (125)
5A0032	25	38	75	60	100	FWP-125A (125)
5A0041	30	33	60	50	90	FWP-175A (175)
5A0052	40	44	75	75	125	FWP-175A (175)
5A0062	50	54	100	90	150	FWP-250A (250)
5A0077	60	66	125	110	175	FWP-250A (250)
5A0099	75	80	150	125	225	FWP-250A (250)
5A0125	100	108	175	175	300	FWP-350A (350)
5A0145	125	129	250	225	350	FWP-350A (350)

Drive Model	Heavy Duty					
	Nominal Output Power HP	AC Drive Input Amps	MCCB Rating Amps <1>	Time Delay Fuse Rating Amps <2>	Non-time Delay Fuse Rating Amps <3>	Bussmann Semi-conductor Fuse Rating (Fuse Ampere) <4>
5A0192	150	158	300	250	400	FWP-600A (600)
5A0242	200	228	400	350	600	FWP-600A (600)

<1> Maximum MCCB Rating is 15 A, or 200 % of drive input current rating, whichever is larger. MCCB voltage rating must be 600 VAC or greater.

<2> Maximum Time Delay fuse is 175% of drive input current rating. This covers any Class CC, J or T class fuse.

<3> Maximum Non-time Delay fuse is 300% of drive input current rating. This covers any CC, J or T class fuse.

<4> Class L fuse is also approved for this rating.

Wiring Fuses for Models 4A0930 and 4A1200

NOTICE: *If a fuse is blown or an Ground Fault Circuit Interrupter (GFCI) is tripped, check the wiring and the selection of peripheral devices to identify the cause. Contact Yaskawa before restarting the drive or the peripheral devices if the cause cannot be identified.*

Install a fuse on the input side to protect drive wiring and prevent other secondary damage. Wire the fuse so that leakage current in the upper controller power supply will trigger the fuse and shut off the power supply.

Select the appropriate fuse from *Table 3.2*.

Table 8.15 Input Fuses for Models 4A0930 and 4A1200

Voltage Class	Model	Selection			Input Fuse (Example)			
		Input Voltage	Current	Pre-arc I^2t (A^2s)	Model	Manufacturer	Rating	Pre-arc I^2t (A^2s)
Three-Phase 400 V Class	4A0930	480 V	1500 A	140000 to 3100000	CS5F-1200	Fuji Electric	AC500 V, 1200 A	276000
	4A0930 with 12-pulse rectification				FWH-1200A	Bussman	AC500 V, 1200 A	–
					FWH-1000A	Bussman	AC500 V, 1000 A	–
	4A1200	480 V	1500 A	320000 to 3100000	CS5F-1500	Fuji Electric	AC500 V, 1500 A	351000
	4A1200 with 12-pulse rectification				FWH-1600A	Bussman	AC500 V, 1600 A	–
					FWH-1200A	Bussman	AC500 V, 1200 A	–

◆ Attachment for External Heatsink Mounting (IP00 Enclosure)

An external attachment can be used to project the heatsink outside of an enclosure to ensure that there is sufficient air circulation around the heatsink.

Contact Yaskawa or a Yaskawa representative for more information on this attachment.

◆ Installing a Motor Thermal Overload (oL) Relay on the Drive Output

Motor thermal overload relays protect the motor by disconnecting power lines to the motor due to a motor overload condition.

Install a motor thermal overload relay between the drive and motor:

- When operating multiple motors on a single AC drive.
- When using a power line bypass to operate the motor directly from the power line.

It is not necessary to install a motor thermal overload relay when operating a single motor from a single AC drive. The AC drive has UL recognized electronic motor overload protection built into the drive software.

Note:
1. Disable the motor protection function (L1-01 = 0) when using an external motor thermal overload relay.
2. Create a sequence to produce an external fault (coast to a stop) when triggered.

■ General Precautions when Using Thermal Overload Relays

Consider the following application precautions when using motor thermal overload relays on the output of AC drives to prevent nuisance trips or overheat of the motor at low speeds:

- Low speed motor operation
- Use of multiple motors on a single AC drive
- Motor cable length
- Nuisance tripping resulting from high AC drive carrier frequency

Low Speed Operation and Motor Thermal oL Relays

Generally, thermal relays are applied on general-purpose motors. When general-purpose motors are driven by AC drives, the motor current is approximately 5% to 10% greater than if driven by a commercial power supply. In addition, the cooling capacity of a motor with a shaft-driven fan decreases when operating at low speeds. Motor overheating may occur even when the load current is within the motor rated value. A thermal relay cannot effectively protect the motor due to the reduction of cooling at low speeds. For this reason, apply the UL recognized electronic thermal overload protection function built into the drive whenever possible.

UL recognized electronic thermal overload function of the drive: Speed-dependent heat characteristics are simulated using data from standard motors and force-ventilated motors. The motor is protected from overload using this function.

Using a Single Drive to Operate Multiple Motors

Set parameter L1-01 to 0 to disable thermal overload protection for the drive.

Note: The UL recognized electronic thermal overload function cannot be applied when operating multiple motors with a single drive.

Long Motor Cables

When a high carrier frequency and long motor cables are used, nuisance tripping of the thermal relay may occur due to increased leakage current. To avoid this, reduce the carrier frequency or increase the tripping level of the thermal overload relay.

Nuisance Tripping Due to a High AC Drive Carrier Frequency

Current waveforms generated by high carrier frequency PWM drives tend to increase the temperature in overload relays. It may be necessary to increase the trip level setting when encountering nuisance triggering of the relay.

WARNING! *Fire Hazard. Confirm an actual motor overload condition is not present prior to increasing the thermal oL trip setting. Check local electrical codes before making adjustments to motor thermal overload settings. Failure to comply could result in death or serious injury.*

This Page Intentionally Blank

Appendix: A

Specifications

A.1 HEAVY DUTY AND NORMAL DUTY RATINGS.....528
A.2 POWER RATINGS.....529
A.3 DRIVE SPECIFICATIONS.....538
A.4 DRIVE WATT LOSS DATA.....540
A.5 DRIVE DERATING DATA.....542

A.1 Heavy Duty and Normal Duty Ratings

The capacity of the drive is based on two types of load characteristics: Heavy Duty (HD) and Normal Duty (ND).

Refer to the following table for the differences between HD and ND.

Table A.1 Selecting the Appropriate Load Rating

Setting Parameter C6-01	Rated Output Current	Overload Tolerance	Default Carrier Frequency
0: Heavy Duty	HD Rating varies by model <1>	150% rated output current for 60 s	2 kHz
1: Normal Duty (default)	ND Rating varies by model <1>	120% rated output current for 60 s varies by model	2 kHz, Swing PWM

<1> *Refer to Power Ratings on page 529* for information on rating changes based on drive model.

- **HD and ND**: HD refers to applications requiring constant torque output, while ND refers to applications with variable torque needs. The drive allows the user to select HD or ND torque depending on the application. Fans, pumps, and blowers should use ND (C6-01 = 1), and other applications generally use HD (C6-01 = 0).
- **Swing PWM**: Swing PWM equivalent to a 2 kHz audible noise. This function turns the motor noise into a less obtrusive white noise.

Note: Differences between HD ratings and ND ratings for the drive include rated input and output current, overload capacity, carrier frequency, and current limit. The default setting is for ND (C6-01 = 1).

A.2 Power Ratings

◆ Three-Phase 200 V Class Drive Models 2A0004 to 2A0030

Table A.2 Power Ratings (Three-Phase 200 V Class)

Item			Specification							
Drive Model			2A0004	2A0006	2A0008	2A0010	2A0012	2A0018	2A0021	2A0030
Maximum Applicable Motor Capacity (HP) <1>		ND Rating	0.75	1	2	3	3	5	7.5	10
		HD Rating	0.75	1	2	2	3	3	5	7.5
Input	Input Current (A) <2>	ND Rating	3.9	7.3	8.8	10.8	13.9	18.5	24	37
		HD Rating	2.9	5.8	7	7.5	11	15.6	18.9	28
	Rated Voltage Rated Frequency		Three-phase 200 to 240 Vac 50/60 Hz/270 to 340 Vdc <3>							
	Allowable Voltage Fluctuation		-15 to 10%							
	Allowable Frequency Fluctuation		±5%							
Output	Rated Output Current (A)	ND Rating <4>	3.5	6	8	9.6	12	17.5	21	30
		HD Rating <5>	3.2	5	6.9	8	11	14	17.5	25
	Overload Tolerance		ND Rating: 120% of rated output current for 60 s HD Rating: 150% of rated output current for 60 s (Derating may be required for applications that start and stop frequently)							
	Carrier Frequency		User adjustable between 1 and 15 kHz							
	Maximum Output Voltage (V)		Three-phase 200 to 240 V (proportional to input voltage)							
	Maximum Output Frequency (Hz)		400 Hz (user-set)							

<1> The motor capacity (HP) refers to a NEC rated 4-pole motor. The rated output current of the drive output amps should be equal to or greater than the motor current. Select the appropriate capacity drive if operating the motor continuously above motor nameplate current.

<2> Assumes operation at the rated output current. Input current rating varies depending on the power supply transformer, input reactor, wiring connections, and power supply impedance.

<3> DC input is not available for UL standards.

<4> Carrier frequency is set to 2 kHz. Current derating is required in order to raise the carrier frequency.

<5> Carrier frequency can be increased to 8 kHz while keeping this current derating. Higher carrier frequency settings require derating..

◆ Three-Phase 200 V Class Drive Models 2A0040 to 2A0211

Table A.3 Power Ratings Continued (Three-Phase 200 V Class)

Item			Specification							
Drive Model			2A0040	2A0056	2A0069	2A0081	2A0110	2A0138	2A0169	2A0211
Maximum Applicable Motor Capacity (HP) <1>		ND Rating	15	20	25	30	40	50	60	75
		HD Rating	10	15	20	25	30	40	50	60
Input	Input Current (A) <2>	ND Rating	52	68	80	92	111	136	164	200
		HD Rating	37	52	68	80	82	111	136	164
	Rated Voltage Rated Frequency		Three-phase 200 to 240 Vac 50/60 Hz/270 to 340 Vdc <3>							
	Allowable Voltage Fluctuation		-15 to 10%							
	Allowable Frequency Fluctuation		±5%							
Output	Rated Output Current (A)	ND Rating <4>	40	56	69	81	110	138	169	211
		HD Rating	33 <5>	47 <5>	60 <5>	75 <5>	85 <5>	115 <5>	145 <6>	180 <6>
	Overload Tolerance		ND Rating: 120% of rated output current for 60 s HD Rating: 150% of rated output current for 60 s (Derating may be required for applications that start and stop frequently)							
	Carrier Frequency		User adjustable between 1 and 15 kHz						User adjustable between 1 and 10 kHz	
	Maximum Output Voltage (V)		Three-phase 200 to 240 Vac (proportional to input voltage)							
	Maximum Output Frequency (Hz)		400 Hz (user-set)							

<1> The motor capacity (HP) refers to a NEC rated 4-pole motor. The rated output current of the drive output amps should be equal to or greater than the motor current. Select the appropriate capacity drive if operating the motor continuously above motor nameplate current.

<2> Assumes operation at the rated output current. Input current rating varies depending on the power supply transformer, input reactor, wiring connections, and power supply impedance.

<3> DC input is not available for UL standards.

<4> Carrier frequency is set to 2 kHz. Current derating is required in order to raise the carrier frequency.

<5> Carrier frequency can be increased to 8 kHz while keeping this current derating. Higher carrier frequency settings require derating.

<6> Carrier frequency can be increased to 5 kHz while keeping this current derating. Higher carrier frequency settings require derating.

◆ Three-Phase 200 V Class Drive Models 2A0250 to 2A0415

Table A.4 Power Ratings Continued (Three-Phase 200 V Class)

Item			Specification			
Drive Models			2A0250	2A0312	2A0360	2A0415
Maximum Applicable Motor Capacity (HP) <1>		ND Rating	100	125	150	175
		HD Rating	75	100	125	150
Input	Input Current (A) <2>	ND Rating	271	324	394	394
		HD Rating	200	271	324	394
	Rated Voltage Rated Frequency		Three-phase 200 to 240 Vac 50/60 Hz/270 to 340 Vdc <3>			
	Allowable Voltage Fluctuation		-15 to 10%			
	Allowable Frequency Fluctuation		±5%			
Output	Rated Output Current (A)	ND Rating <4>	250	312	360	415
		HD Rating	215 <5>	283 <5>	346 <5>	415 <4>
	Overload Tolerance		ND Rating: 120% of rated output current for 60 s HD Rating: 150% of rated output current for 60 s (Derating may be required for applications that start and stop frequently)			
	Carrier Frequency		User adjustable between 1 and 10 kHz			
	Maximum Output Voltage (V)		Three-phase 200 to 240 Vac (proportional to input voltage)			
	Maximum Output Frequency (Hz)		400 Hz (user-set)			

<1> The motor capacity (HP) refers to a NEC rated 4-pole motor. The rated output current of the drive output amps should be equal to or greater than the motor current. Select the appropriate capacity drive if operating the motor continuously above motor nameplate current.

<2> Assumes operation at the rated output current. Input current rating varies depending on the power supply transformer, input reactor, wiring connections, and power supply impedance.

<3> DC input is not available for UL standards.

<4> Carrier frequency is set to 2 kHz. Current derating is required in order to raise the carrier frequency.

<5> Carrier frequency can be increased to 5 kHz while keeping this current derating. Higher carrier frequency settings require derating.

◆ Three-Phase 400 V Class Drive Models 4A0002 to 4A0031

Table A.5 Power Ratings (Three-Phase 400 V Class)

Item			Specification								
Drive Models			4A0002	4A0004	4A0005	4A0007	4A0009	4A0011	4A0018	4A0023	4A0031
Maximum Applicable Motor Capacity (HP) <1>		ND Rating	0.75	2	3	3	5	7.5	10	15	20
		HD Rating	0.75	2	3	3	5	5	7.5	10	15
Input	Input Current (A) <2>	ND Rating	2.1	4.3	5.9	8.1	9.4	14	20	24	38
		HD Rating	1.8	3.2	4.4	6	8.2	10.4	15	20	29
	Rated Voltage Rated Frequency		Three-phase: 380 to 480 Vac 50/60 Hz/510 to 680 Vdc <3>								
	Allowable Voltage Fluctuation		-15 to 10%								
	Allowable Frequency Fluctuation		±5%								
Rated Output Current (A)	Rated Output Current (A)	ND Rating <4>	2.1	4.1	5.4	6.9	8.8	11.1	17.5	23	31
		HD Rating <5>	1.8	3.4	4.8	5.5	7.2	9.2	14.8	18	24
	Overload Tolerance		ND Rating: 120% of rated output current for 60 s HD Rating: 150% of rated output current for 60 s (Derating may be required for applications that start and stop frequently)								
	Carrier Frequency		User adjustable between 1 and 15 kHz								
	Maximum Output Voltage (V)		Three-phase: 380 to 480 Vac (proportional to input voltage)								
	Maximum Output Frequency (Hz)		400 Hz (user-adjustable)								

<1> The motor capacity (HP) refers to a NEC rated 4-pole motor. The rated output current of the drive output amps should be equal to or greater than the motor current. Select the appropriate capacity drive if operating the motor continuously above motor nameplate current.

<2> Assumes operation at the rated output current. Input current rating varies depending on the power supply transformer, input reactor, wiring conditions, and power supply impedance.

<3> DC input is not available for UL standards.

<4> Carrier frequency is set to 2 kHz. Current derating is required in order to raise the carrier frequency.

<5> Carrier frequency can be increased to 8 kHz while keeping this current derating. Higher carrier frequency settings require derating.

◆ Three-Phase 400 V Class Drive Models 4A0038 to 4A0165

Table A.6 Power Ratings Continued (Three-Phase 400 V Class)

Item			Specification							
Drive Models			4A0038	4A0044	4A0058	4A0072	4A0088	4A0103	4A0139	4A0165
Maximum Applicable Motor Capacity (HP) <1>		ND Rating	25	30	40	50	60	75	100	125
		HD Rating	20	25-30	25-30	40	50-60	50-60	75	100
Input	Input Current (A) <2>	ND Rating	44	52	58	71	86	105	142	170
		HD Rating	39	44	43	58	71	86	105	142
	Rated Voltage Rated Frequency		Three-phase: 380 to 480 Vac 50/60 Hz/510 to 680 Vdc <3>							
	Allowable Voltage Fluctuation		-15 to 10%							
	Allowable Frequency Fluctuation		±5%							
Rated Output Current (A)	Rated Output Current (A)	ND Rating <4>	38	44	58	72	88	103	139	165
		HD Rating	31 <5>	39 <5>	45 <5>	60 <5>	75 <5>	91 <5>	112 <6>	150 <6>
	Overload Tolerance		ND Rating: 120% of rated output current for 60 s HD Rating: 150% of rated output current for 60 s (Derating may be required for applications that start and stop frequently)							
	Carrier Frequency		User adjustable between 1 and 15 kHz						User adjustable between 1 and 10 kHz	
	Maximum Output Voltage (V)		Three-phase: 380 to 480 Vac (proportional to input voltage)							
	Maximum Output Frequency (Hz)		400 Hz (user-adjustable)							

<1> The motor capacity (HP) refers to a NEC rated 4-pole motor. The rated output current of the drive output amps should be equal to or greater than the motor current. Select the appropriate capacity drive if operating the motor continuously above motor nameplate current.

<2> Assumes operation at the rated output current. Input current rating varies depending on the power supply transformer, input reactor, wiring conditions, and power supply impedance.

<3> DC input is not available for UL standards.

<4> Carrier frequency is set to 2 kHz. Current derating is required in order to raise the carrier frequency.

<5> Carrier frequency can be increased to 8 kHz while keeping this current derating. Higher carrier frequency settings require derating.

<6> Carrier frequency can be increased to 5 kHz while keeping this current derating. Higher carrier frequency settings require derating.

◆ Three-Phase 400 V Class Drive Models 4A0208 to 4A1200

Table A.7 Power Ratings Continued (Three-Phase 400 V Class)

Item			Specification								
Drive Models			4A0208	4A0250	4A0296	4A0362	4A0414	4A0515	4A0675	4A0930	4A1200
Maximum Applicable Motor Capacity (HP) <1>		ND Rating	150	200	250	300	350	400-450	500-550	750	1000
		HD Rating	125-150	150	200	250	300	350	400-450-500	650	900
Input	Input Current (A) <2>	ND Rating	207	248	300	346	410	465	657	922	1158
		HD Rating	170	207	248	300	346	410	584	830	1031
	Rated Voltage Rated Frequency		Three-phase: 380 to 480 Vac 50/60 Hz/510 to 680 Vdc <3>								
	Allowable Voltage Fluctuation		-15 to 10%								
	Allowable Frequency Fluctuation		±5%								
Output	Rated Output Current (A)	ND Rating <4>	208	250	296	362	414	515	675	930	1200
		HD Rating	180 <5>	216 <5>	260 <5>	304 <5>	370 <6>	450 <4>	605 <4>	810 <4>	1090 <4>
	Overload Tolerance		ND Rating: 120% of rated output current for 60 s HD Rating: 150% of rated output current for 60 s (Derating may be required for applications that start and stop frequently)								
	Carrier Frequency		User-adjustable between 1 and 10 kHz					User-adjustable between 1 and 5 kHz			
	Maximum Output Voltage (V)		Three-phase: 380 to 480 Vac (proportional to input voltage)							0.95 × [input voltage]	
	Maximum Output Frequency (Hz)		400 Hz (user-adjustable)								

<1> The motor capacity (HP) refers to a NEC rated 4-pole motor. The rated output current of the drive output amps should be equal to or greater than the motor current. Select the appropriate capacity drive if operating the motor continuously above motor nameplate current.

<2> Assumes operation at the rated output current. Input current rating varies depending on the power supply transformer, input reactor, wiring conditions, and power supply impedance.

<3> DC input is not available for UL standards.

<4> Carrier frequency is set to 2 kHz. Current derating is required in order to raise the carrier frequency.

<5> Carrier frequency can be increased to 5 kHz while keeping this current derating. Higher carrier frequency settings require derating.

<6> Carrier frequency can be increased to 5 kHz while keeping this current derating. Higher carrier frequency settings require derating.

◆ Three-Phase 600 V Class Drive Models 5A0003 to 5A0032

Table A.8 Power Ratings (Three-Phase 600 V Class)

Item			Specification								
Drive Models			5A0003	5A0004	5A0006	5A0009	5A0011	5A0017	5A0022	5A0027	5A0032
Maximum Applicable Motor Capacity (HP) <1>		ND Rating	2	3	5	7.5	10	15	20	25	30
		HD Rating	1	2	3	5	7.5	10	15	20	25
Input	Input Current (A) <2>	ND Rating	3.6	5.1	8.3	12	16	23	31	38	45
		HD Rating	1.9	3.6	5.1	8.3	12	16	23	31	38
	Rated Voltage Rated Frequency		Three-phase 500 to 600 Vac 50/60 Hz								
	Allowable Voltage Fluctuation		-10 (-15) to +10%								
	Allowable Frequency Fluctuation		±5%								
Output	Rated Output Current (A)	ND Rating <3>	2.7	3.9	6.1	9	11	17	22	27	32
		HD Rating <4>	1.7	3.5	4.1	6.3	9.8	12.5	17	22	27
	Overload Tolerance		ND Rating: 120% of rated output current for 60 s HD Rating: 150% of rated output current for 60 s (Derating may be required for applications that start and stop frequently)								
	Carrier Frequency		User adjustable between 2 and 15 kHz					User adjustable between 2 and 10 kHz			
	Maximum Output Voltage (V)		Three-phase 500 to 600 Vac (proportional to input voltage)								
	Maximum Output Frequency (Hz)		400 Hz (user-set)								

<1> The motor capacity (HP) refers to a NEC rated 4-pole motor. The rated output current of the drive output amps should be equal to or greater than the motor current. Select the appropriate capacity drive if operating the motor continuously above motor nameplate current.

<2> Assumes operation at the rated output current. Input current rating varies depending on the power supply transformer, input reactor, wiring connections, and power supply impedance.

<3> Carrier frequency is set to 2 kHz. Current derating is required to raise the carrier frequency.

<4> Carrier frequency can be increased to 8 kHz while keeping this current derating. Higher carrier frequency settings require derating.

◆ Three-Phase 600 V Class Drive Models 5A0041 to 5A0099

Table A.9 Power Ratings Continued (Three-Phase 600 V Class)

Item			Specification				
Drive Models			5A0041	5A0052	5A0062	5A0077	5A0099
Maximum Applicable Motor Capacity (HP) <1>		ND Rating	40	50	60	75	100
		HD Rating	25-30	40	50-60	50-60	75
Input	Input Current (A) <2>	ND Rating	44	54	66	80	108
		HD Rating	33	44	54	66	80
	Rated Voltage Rated Frequency		Three-phase 500 to 600 Vac 50/60 Hz				
	Allowable Voltage Fluctuation		-10 (-15) to +10%				
	Allowable Frequency Fluctuation		±5%				
Output	Rated Output Current (A)	ND Rating <3>	41	52	62	77	99
		HD Rating	32 <4>	41 <4>	52 <4>	62 <4>	77 <5>
	Overload Tolerance		ND Rating: 120% of rated output current for 60 s HD Rating: 150% of rated output current for 60 s (Derating may be required for applications that start and stop frequently)				
	Carrier Frequency		User adjustable between 2 and 10 kHz				User adjustable between 2 and 8 kHz
	Maximum Output Voltage (V)		Three-phase 500 to 600 Vac (proportional to input voltage)				
	Maximum Output Frequency (Hz)		400 Hz (user-set)				

<1> The motor capacity (HP) refers to a NEC rated 4-pole motor. The rated output current of the drive output amps should be equal to or greater than the motor current. Select the appropriate capacity drive if operating the motor continuously above motor nameplate current.

<2> Assumes operation at the rated output current. Input current rating varies depending on the power supply transformer, input reactor, wiring connections, and power supply impedance.

<3> Carrier frequency can be increased to 2 kHz while keeping this current derating. Higher carrier frequency settings require derating.

<4> Carrier frequency can be increased to 8 kHz while keeping this current derating. Higher carrier frequency settings require derating.

<5> Carrier frequency can be increased to 5 kHz while keeping this current derating. Higher carrier frequency settings require derating.

◆ Three-Phase 600 V Class Drive Models 5A0125 to 5A0242

Table A.10 Power Ratings Continued (Three-Phase 600 V Class)

Item			Specification			
Drive Models			5A0125	5A0145	5A0192	5A0242
Maximum Applicable Motor Capacity (HP) <1>		ND Rating	125	150	200	250
		HD Rating	100	125	150	200
Input	Input Current (A) <2>	ND Rating	129	158	228	263
		HD Rating	108	129	158	228
	Rated Voltage Rated Frequency		Three-phase 500 to 600 Vac 50/60 Hz			
	Allowable Voltage Fluctuation		-10 (-15) to +10%			
	Allowable Frequency Fluctuation		±5%			
Output	Rated Output Current (A)	ND Rating <3>	125	145	192	242
		HD Rating <3>	99	130	172	200
	Overload Tolerance		ND Rating: 120% of rated output current for 60 s HD Rating: 150% of rated output current for 60 s (Derating may be required for applications that start and stop frequently)			
	Carrier Frequency		User adjustable between 2 and 5 kHz			
	Maximum Output Voltage (V)		Three-phase 500 to 600 Vac (proportional to input voltage)			
	Maximum Output Frequency (Hz)		400 Hz (user-set)			

<1> The motor capacity (HP) refers to a NEC rated 4-pole motor. The rated output current of the drive output amps should be equal to or greater than the motor current. Select the appropriate capacity drive if operating the motor continuously above motor nameplate current.

<2> Assumes operation at the rated output current. Input current rating varies depending on the power supply transformer, input reactor, wiring connections, and power supply impedance.

<3> Carrier frequency can be increased to 2 kHz while keeping this current derating. Higher carrier frequency settings require derating.

A.3 Drive Specifications

Note: 1. Perform rotational Auto-Tuning to obtain the performance specifications given below.
2. For optimum performance life of the drive, install the drive in an environment that meets the required specifications.

Item		Specification
Control Character-istics	Control Method	The following control methods can be set using drive parameters: • V/f Control (V/f) • V/f Control with PG (V/f w/PG) • Open Loop Vector Control (OLV) • Closed Loop Vector Control (CLV) • Open Loop Vector Control for PM (OLV/PM) • Advanced Open Loop Vector Control for PM (AOLV/PM) • Closed Loop Vector Control for PM (CLV/PM)
	Frequency Control Range	0.01 to 400 Hz
	Frequency Accuracy (Temperature Fluctuation)	Digital input: within ±0.01% of the max output frequency (-10 to +40 °C) Analog input: within ±0.1% of the max output frequency (25 °C ±10 °C)
	Frequency Setting Resolution	Digital inputs: 0.01 Hz Analog inputs: 1/2048 of the maximum output frequency setting (11 bit plus sign)
	Output Frequency Resolution	0.001 Hz
	Frequency Setting Signal	Main speed frequency reference: DC -10 to +10 V (20 kΩ), DC 0 to +10 V (20 kΩ), 4 to 20 mA (250 Ω), 0 to 20 mA (250 Ω) Main speed reference: Pulse train input (max. 32 kHz)
	Starting Torque	V/f, V/f w/PG: 150% at 3 Hz OLV: 200% at 0.3 Hz <1> CLV, AOLV/PM, CLV/PM: 200% at 0.0 r/min <1> OLV/PM: 100% at 3 Hz
	Speed Control Range	V/f, V/f w/PG: 1:40 OLV: 1:200 CLV, CLV/PM: 1:1500 OLV/PM: 1:20 AOLV/PM: 1:100 <2> <3> <4>
	Speed Control Accuracy	OLV: ±0.2% (25 °C ±10 °C) CLV: ±0.02% (25 °C ±10 °C) <5>
	Speed Response	OLV, OLV/PM, AOLV/PM: 10 Hz (25 °C ±10 °C (77 °F ±50 °F)) CLV, CLV/PM: 50 Hz (25 °C ±10 °C (77 °F ±50 °F))
	Torque Limit	Parameter settings allow separate limits in four quadrants (OLV, CLV, AOLV/PM, CLV/PM)
	Accel/Decel Time	0.0 to 6000.0 s (4 selectable combinations of independent acceleration and deceleration settings)
	Braking Torque	Approx. 20% (approx. 125% when using braking resistor) <6> • Short-time decel torque <7> : over 100% for 0.4/ 0.75 kW motors, over 50% for 1.5 kW motors, and over 20% for 2.2 kW and above motors <8> (overexcitation/High Slip Braking: approx. 40%) • Continuous regenerative torque: approx. 20% <8> (approx. 125% with dynamic braking resistor option <6> : 10% ED, 10s)
	Braking Transistor	Models 2A0004 to 2A0138, 4A0002 to 4A0072, and 5A0003 to 5A0052 have a built-in braking transistor.
	V/f Characteristics	User-selected programs and V/f preset patterns possible
	Main Control Functions	Torque Control, Droop Control, Speed/torque Control Switching, Feed Forward Control, Zero Servo Function, Momentary Power Loss Ride-Thru, Speed Search, Overtorque/Undertorque Detection, Torque Limit, 17 Step Speed (max), Accel/decel Switch, S-curve Accel/decel, 3-wire Sequence, Auto-tuning (rotational, stationary tuning), Dwell, Cooling Fan on/off Switch, Slip Compensation, Torque Compensation, Frequency Jump, Upper/lower Limits for Frequency Reference, DC Injection Braking at Start and Stop, Overexcitation Braking, High Slip Braking, PID Control (with sleep function), Energy Saving Control, MEMOBUS/Modbus Comm. (RS-422/RS-485 max, 115.2 kbps), Fault Restart, Application Presets, DriveWorksEZ (customized function), Removable Terminal Block with Parameter Backup Function, Online Tuning, KEB, Overexcitation Deceleration, Inertia (ASR) Tuning, Overvoltage Suppression, High Frequency Injection.

Item		Specification
Protection Functions	Motor Protection	Electronic thermal overload relay
	Momentary Overcurrent Protection	Drive stops when output current exceeds 200% of Heavy Duty Rating
	Overload Protection	Drive stops after 60 s at 150% of rated Heavy Duty output current <9>
	Overvoltage Protection	200 V class: Stops when DC bus voltage exceeds approx. 410 V 400 V class: Stops when DC bus voltage exceeds approx. 820 V 600 V class: Stops when DC bus voltage exceeds approx. 1040 V
	Undervoltage Protection	200 V class: Stops when DC bus voltage falls below approx. 190 V 400 V class: Stops when DC bus voltage falls below approx. 380 V 600 V class: Stops when DC bus voltage falls below approx. 475 V
	Momentary Power Loss Ride-Thru	Immediately stop after 15 ms or longer power loss. <10> Continuous operation during power loss than 2 s (standard) <11>
	Heatsink Overheat Protection	Thermistor
	Braking Resistor Overheat Protection	Overheat input signal for braking resistor (Optional ERF-type, 3% ED)
	Stall Prevention	Stall Prevention is available during acceleration, deceleration, and during run.
	Ground Protection	Electronic circuit protection <12>
	DC Bus Charge LED	Remains lit until DC bus voltage falls below 50 V
Environment	Area of Use	Indoors
	Ambient Temperature	IP20/NEMA 1, UL Type 1 enclosure: -10 °C to +40 °C (14 °F to 104 °F) IP00 enclosure: -10 °C to +50 °C (14 °F to 122 °F) Finless Type: IP20/IP00 enclosure: -10 °C to +45 °C (14 °F to 113 °F)
	Humidity	95 RH% or less (no condensation)
	Storage Temperature	-20 °C to +60 °C (-4 °F to +140 °F) short-term temperature during transportation
	Altitude	Up to 1000 meters without derating, up to 3000 m with output current and voltage derating. *Refer to Altitude Derating on page 554* for details.
	Vibration/Shock	10 to 20 Hz: 9.8 m/s^2 <13> 20 to 55 Hz: 5.9 m/s^2 (2A0004 to 2A0211, 4A0002 to 4A0165, and 5A0003 to 5A0099) 2.0 m/s^2 (2A0250 to 2A0415, 4A0208 to 4A1200, and 5A0125 to 5A0242)
Standard		• UL508C • IEC/EN 61800-3, IEC/EN 61800-5-1 • Two Safe Disable inputs and one EDM output according to ISO/EN 13849-1 Cat. 3 PLd, IEC/EN 61508 SIL2 • CSA
Protection Design		IP00/Open Type enclosure, IP20/NEMA 1, UL Type 1 enclosure <14>

<1> Select control modes in accordance with drive capacity.

<2> High-frequency current superposition (n8-57=1) is available.

<3> Perform Rotational Auto Tuning.

<4> Contact Yaskawa or your nearest sales representative if using a PM motor other than Super Energy-saving Motors manufactured by Yaskawa Motor Co., Ltd. (SSR1 series and SST4 series with standard specifications).

<5> The accuracy of these values depends on motor characteristics, ambient conditions, and drive settings. Specifications may vary with different motors and with changing motor temperature. Contact Yaskawa for consultation.

<6> Disable Stall Prevention during deceleration (L3-04 = 0) when using a regenerative converter, a regenerative unit, a braking resistor or the Braking Resistor Unit. The default setting for the Stall Prevention function will interfere with the braking resistor.

<7> Instantaneous average deceleration torque refers to the torque required to decelerate the motor (uncoupled from the load) from the rated motor speed down to zero in the shortest time.

<8> Actual specifications may vary depending on motor characteristics.

<9> Overload protection may be triggered when operating with 150% of the rated output current if the output frequency is less than 6 Hz.

<10> May be shorter due to load conditions and motor speed.

<11> A separate Momentary Power Loss Ride-Thru Unit is required for models 2A0004 to 2A0056 and 4A0002 to 4A0031 if the application needs to continue running for up to 2 seconds during a momentary power loss.

<12> Ground protection is triggered when a ground short circuit occurs while the drive is running. The ground protection cannot be provided when the impedance of the ground fault path is too low, or when the drive is powered up while a ground fault is present at the output.

<13> Models 4A0930 and 4A1200 are rated at 5.9 m/s^2.

<14> Removing the top protective cover or bottom conduit bracket from an IP20/NEMA 1, UL Type 1 enclosure drive voids NEMA 1, UL Type 1 protection while maintaining IP20 conformity. This is applicable to models 2A0004 to 2A0211, 4A0002 to 4A0165, and 5A0003 to 5A0242.

A.4 Drive Watt Loss Data

Table A.11 Watt Loss 200 V Class Three-Phase Models

Drive Model	Normal Duty				Heavy Duty			
	Rated Amps (A) <3>	Heatsink Loss (W)	Interior Unit Loss (W)	Total Loss (W)	Rated Amps (A)	Heatsink Loss (W)	Interior Unit Loss (W)	Total Loss (W)
2A0004	3.5	18.4	47	66	3.2 <1>	14.8	44	59
2A0006	6.0	31	51	82	5.0 <1>	24	48	72
2A0008	8.0	43	52	95	6.9 <1>	35	49	84
2A0010	9.6	57	58	115	8.0 <1>	43	52	95
2A0012	12.0	77	64	141	11.0 <1>	64	58	122
2A0018	17.5	101	67	168	14.0 <1>	77	60	137
2A0021	21	138	83	222	17.5 <1>	101	67	168
2A0030	30	262	117	379	25 <1>	194	92	287
2A0040	40	293	145	437	33 <1>	214	105	319
2A0056	56	371	175	546	47 <1>	280	130	410
2A0069	69	491	205	696	60 <1>	395	163	558
2A0081	81	527	257	785	75 <1>	460	221	681
2A0110	110	719	286	1005	85 <1>	510	211	721
2A0138	138	842	312	1154	115 <1>	662	250	912
2A0169	169	1014	380	1394	145 <1>	816	306	1122
2A0211	211	1218	473	1691	180 <2>	976	378	1354
2A0250	250	1764	594	2358	215 <2>	1514	466	1980
2A0312	312	2020	665	2686	283 <2>	1936	588	2524
2A0360	360	2698	894	3591	346 <2>	2564	783	3347
2A0415	415	2672	954	3626	415 <3>	2672	954	3626

<1> Value assumes the carrier frequency is set to 8 kHz or less.
<2> Value assumes the carrier frequency is set to 5 kHz or less.
<3> Value assumes the carrier frequency is set to 2 kHz.

Table A.12 Watt Loss 400 V Class Three-Phase Models

Drive Model	Normal Duty				Heavy Duty			
	Rated Amps (A) <3>	Heatsink Loss (W)	Interior Unit Loss (W)	Total Loss (W)	Rated Amps (A)	Heatsink Loss (W)	Interior Unit Loss (W)	Total Loss (W)
4A0002	2.1	20	48	68	1.8 <1>	15.9	45	61
4A0004	4.1	32	49	81	3.4 <1>	25	46	70
4A0005	5.4	45	53	97	4.8 <1>	37	49	87
4A0007	6.9	62	59	121	5.5 <1>	48	53	101
4A0009	8.8	66	60	126	7.2 <1>	53	55	108
4A0011	11.1	89	73	162	9.2 <1>	69	61	130
4A0018	17.5	177	108	285	14.8 <1>	135	86	221
4A0023	23	216	138	354	18.0 <1>	150	97	247
4A0031	31	295	161	455	24 <1>	208	115	323
4A0038	38	340	182	521	31 <1>	263	141	403
4A0044	44	390	209	599	39 <1>	330	179	509
4A0058	58	471	215	686	45 <1>	349	170	518
4A0072	72	605	265	870	60 <1>	484	217	701

Drive Model	Normal Duty				Heavy Duty			
	Rated Amps (A) <3>	Heatsink Loss (W)	Interior Unit Loss (W)	Total Loss (W)	Rated Amps (A)	Heatsink Loss (W)	Interior Unit Loss (W)	Total Loss (W)
4A0088	88	684	308	993	75 <1>	563	254	817
4A0103	103	848	357	1205	91 <1>	723	299	1022
4A0139	139	1215	534	1749	112 <2>	908	416	1325
4A0165	165	1557	668	2224	150 <2>	1340	580	1920
4A0208	208	1800	607	2408	180 <2>	1771	541	2313
4A0250	250	2379	803	3182	216 <2>	2360	715	3075
4A0296	296	2448	905	3353	260 <2>	2391	787	3178
4A0362	362	3168	1130	4298	304 <2>	3075	985	4060
4A0414	414	3443	1295	4738	370 <2>	3578	1164	4742
4A0515	515	4850	1668	6518	450 <3>	3972	1386	5358
4A0675	675	4861	2037	6898	605 <3>	4191	1685	5875
4A0930	930	8476	2952	11428	810 <3>	6912	2455	9367
4A1200	1200	8572	3612	12184	1090 <3>	7626	3155	10781

<1> Value assumes the carrier frequency is set to 8 kHz or less.
<2> Value assumes the carrier frequency is set to 5 kHz or less.
<3> Value assumes the carrier frequency is set to 2 kHz.

Table A.13 Watt Loss Three-Phase 600 V Class Three-Phase Models

Drive Model	Normal Duty				Heavy Duty			
	Rated Amps (A) <3>	Heatsink Loss (W)	Interior Unit Loss (W)	Total Loss (W)	Rated Amps (A)	Heatsink Loss (W)	Interior Unit Loss (W)	Total Loss (W)
5A0003	2.7	23.3	21.5	44.8	1.7 <2>	28.9	19.8	48.7
5A0004	3.9	33.6	27.5	61.1	3.5 <2>	54.3	27.6	81.9
5A0006	6.1	43.7	28.1	71.8	4.1 <2>	53.0	27.0	80.0
5A0009	9.0	68.9	43.4	112.3	6.3 <2>	78.7	36.4	115.1
5A0011	11	88.0	56.1	144.0	9.8 <2>	110.9	49.5	160.3
5A0017	17	146.7	96.6	243.2	12.5 <2>	144.7	67.5	212.2
5A0022	22	178.3	99.4	277.7	17 <2>	203.8	81.1	284.8
5A0027	27	227.2	132.1	359.3	22 <1>	267.2	113.8	381.1
5A0032	32	279.9	141.6	421.5	27 <1>	332.9	132.2	465.1
5A0041	41	330.8	136.2	467.0	32 <1>	405.9	127.6	533.5
5A0052	52	427.8	166.2	594.0	41 <1>	527.2	161.4	688.5
5A0062	62	791.2	279.0	1070.2	52 <1>	1271.5	335.0	1606.5
5A0077	77	959.1	329.4	1288.6	62 <1>	1457.0	379.5	1836.5
5A0099	99	1253.2	411.7	1664.9	77 <2>	1267.0	352.0	1619.0
5A0125	125	1641	537	2178	99 <3>	1328	422	1750
5A0145	145	1860	603	2463	130 <3>	1638	508	2146
5A0192	192	2420	769	3189	172 <3>	2114	648	2762
5A0242	242	3100	1131	4231	200 <3>	2526	896	3422

<1> Value assumes the carrier frequency is set to 8 kHz or less.
<2> Value assumes the carrier frequency is set to 5 kHz or less.
<3> Value assumes the carrier frequency is set to 2 kHz.

A.5 Drive Derating Data

The drive can be operated at above the rated temperature, altitude, and default carrier frequency by derating the drive capacity.

◆ Single-Phase Derating

A1000 drives are optimized and compatible for use with both three-phase and single-phase input power supplies. The A1000 output to the motor is fixed at three-phase.

A1000 output capacity to the motor is reduced or derated when single-phase input power is used.

Selection of larger A1000 models always results in greater output capacity to the motor when the A1000 is supplied with three-phase input power. Conversely, selection of larger A1000 models does not always yield greater output capacity when the A1000 is used with single-phase input power. Several factors affect the amount of derated drive output capacity when single-phase input power is supplied to the A1000, such as:

- single-phase input voltage level
- motor voltage rating
- amount of input impedance.

The tables in this section assist in A1000 model selection by considering factors that affect the amount of A1000 derating in single-phase input power applications.

The continuous output current listed in the tables allows for a 120% overload for 60 seconds.

Contact Yaskawa if assistance is needed in selecting A1000 drive models for heavy duty/single-phase applications with higher overload requirements.

Table A.14 240 V Single-Phase Input (-5% to +10%), 230 V Three-Phase Motor

Drive Model	Without Additional Impedance			With Additional Impedance (use either DC type or AC type)				
	Output Capacity		Single Phase Input Load	Yaskawa Reactor Part Number		Output Capacity		Single Phase Input Load
	Motor Power (HP)	Motor FLA	Continuous Input Current (A)	DC Type	AC Type	Motor Power (HP)	Motor FLA	Continuous Input Current (A)
2A0004	0.33	1.52	4.3	URX000043	URX000303	0.5	2.2	4.1
2A0006	0.5	2.2	5.7	URX000043	URX000303	0.75	3.2	5.7
2A0008	0.75	3.2	7.7	05P00620-0113	URX000307	1	4.2	7.2
2A0010	0.75	3.2	7.7	05P00620-0113	URX000311	1	4.2	7.8
2A0012	1	4.2	10	URX000048	URX000316	2	7.5	13
2A0018	2	6.8	19	05P00620-0120	URX000319	3	9.6	19
2A0021	2	6.8	19	05P00620-0120	URX000323	3	9.6	19
2A0030	2	6.8	20	05P00620-0120	URX000323	3	9.6	19
2A0040	3	9.6	27	05P00620-0124	URX000323	5	15.2	30
2A0056	5	15.2	43	URX000059	URX000326	7.5	22	42
2A0069	5	15.2	45	URX000063	URX000332	10	28	56
2A0081	10	28	79	URX000072	URX000338	15	42	84
2A0110	10	28	60	DC Link Choke Built-in	Do Not Use AC Reactor	10	28	60
2A0138	15	42	87			15	42	87
2A0169	20	54	114			20	54	114
2A0211	20	54	116			20	54	116
2A0250	25	68	143			25	68	143
2A0312	30	80	170			30	80	170
2A0360	40	104	224			40	104	224
2A0415	50	130	275			50	130	275

Table A.15 240 V Single-Phase Input (-5% to +10%), 208 V Three-Phase Motor

Drive Model	Without Additional Impedance			With Additional Impedance (use either DC type or AC type)				
	Output Capacity		Single Phase Input Load	Yaskawa Reactor Part Number		Output Capacity		Single Phase Input Load
	Motor Power (HP)	Motor FLA	Continuous Input Current (A)	DC Type	AC Type	Motor Power (HP)	Motor FLA	Continuous Input Current (A)
2A0004	0.33	1.7	4.3	URX000043	URX000303	0.5	2.4	4.1
2A0006	0.5	2.4	5.7	URX000043	URX000303	0.75	3.5	5.7
2A0008	0.75	3.5	7.7	05P00620-0113	URX000307	1	4.6	7.2
2A0010	0.75	3.5	7.7	05P00620-0113	URX000311	1	4.6	7.8
2A0012	1	4.6	10	05P00620-0115	URX000315	2	7.5	13
2A0018	2	7.5	19	05P00620-0120	URX000319	3	10.6	19
2A0021	2	7.5	19	05P00620-0120	URX000323	3	10.6	19
2A0030	2	7.5	20	05P00620-0120	URX000323	3	10.6	19
2A0040	3	10.6	27	05P00620-0124	URX000323	5	17	30
2A0056	5	17	43	URX000059	URX000326	7.5	24	42
2A0069	5	17	45	URX000063	URX000332	10	31	56
2A0081	10	31	79	URX000072	URX000339	15	46	84
2A0110	10	31	60	DC Link Choke Built-in	URX000340	15	46	76
2A0138	15	46	87		URX000343	15	46	77
2A0169	20	59	114		URX000342	20	59	102
2A0211	20	59	116		URX000344	25	75	129
2A0250	25	75	143		URX000347	30	88	156
2A0312	30	88	170		URX000350	40	114	204
2A0360	40	114	224		URX000353	50	143	252
2A0415	50	143	275		URX000356	60	169	301

Table A.16 480 V Single-Phase Input (-5% to +10%), 460 V Three-Phase Motor

Drive Model	Without Additional Impedance			With Additional Impedance (use either DC type or AC type)				
	Output Capacity		Single Phase Input Load	Yaskawa Reactor Part Number		Output Capacity		Single Phase Input Load
	Motor Power (HP)	Motor FLA	Continuous Input Current (A)	DC Type	AC Type	Motor Power (HP)	Motor FLA	Continuous Input Current (A)
4A0002	0.33	0.76	2.4	URX000041	URX000295	0.5	1.1	2.1
4A0004	0.75	1.6	4.2	URX000041	URX000299	1	2.1	3.8
4A0005	1	2.1	5.1	05P00620-0110	URX000303	1.5	3	5.5
4A0007	1	2.1	5.6	05P00652-0213	URX000308	2	3.4	6.7
4A0009	2	3.4	10	URX000048	URX000312	3	4.8	9.5
4A0011	2	3.4	10	URX000053	URX000316	3	4.8	10
4A0018	2	3.4	9.7	URX000052	URX000316	3	4.8	10
4A0023	3	4.8	14	URX000052	URX000316	5	7.6	15
4A0031	5	7.6	22	URX000055	URX000324	7.5	11	22
4A0038	7.5	11	31	05P00620-0123	URX000327	10	14	31
4A0044	7.5	11	31	URX000061	URX000327	10	14	28

Drive Model	Without Additional Impedance			With Additional Impedance (use either DC type or AC type)				
	Output Capacity		Single Phase Input Load	Yaskawa Reactor Part Number		Output Capacity		Single Phase Input Load
	Motor Power (HP)	Motor FLA	Continuous Input Current (A)	DC Type	AC Type	Motor Power (HP)	Motor FLA	Continuous Input Current (A)
4A0058	10	14	30	DC Link Choke Built-in	URX000332	15	21	41
4A0072	15	21	43		Do Not Use AC Reactor	15	21	43
4A0088	15	21	44			15	21	44
4A0103	15	21	45		URX000335	20	27	54
4A0139	30	40	84		URX000341	30	40	80
4A0165	30	40	85		URX000341	30	40	81
4A0208	50	65	136		URX000347	50	65	130
4A0250	60	77	162		URX000347	60	77	154
4A0296	60	77	165		URX000350	75	96	192
4A0362	75	96	205		URX000353	100	124	251
4A0414	100	124	267		URX000356	125	156	314
4A0515	100	124	275		URX000353	100	124	255
4A0675	125	156	345		Do Not Use	125	156	345

Table A.17 480 V Single-Phase Input (-5% to +10%), 400 V Three-Phase Motor

Drive Model	Without Additional Impedance			With Additional Impedance (use either DC type or AC type)				
	Output Capacity		Single Phase Input Load	Yaskawa Reactor Part Number		Output Capacity		Single Phase Input Load
	Motor Power (HP)	Motor FLA	Continuous Input Current (A)	DC Type	AC Type	Motor Power (HP)	Motor FLA	Continuous Input Current (A)
4A0002	0.33	0.88	2.4	URX000041	URX000295	0.5	1.26	2.1
4A0004	0.75	1.8	4.2	URX000041	URX000299	1	2.4	3.8
4A0005	1	2.4	5.1	05P00620-0110	URX000303	1.5	3.4	5.5
4A0007	1	2.4	5.6	05P00652-0213	URX000308	2	3.9	6.7
4A0009	2	3.9	10	URX000048	URX000312	3	5.5	9.5
4A0011	2	3.9	10	URX000053	URX000316	3	5.5	10
4A0018	2	3.9	9.7	URX000052	URX000316	3	5.5	10
4A0023	3	5.5	14	URX000052	URX000316	5	8.7	15
4A0031	5	8.7	22	URX000055	URX000324	7.5	12.7	22
4A0038	7.5	12.7	31	05P00620-0123	URX000327	10	16	31
4A0044	7.5	12.7	31	URX000061	URX000327	10	16	28
4A0058	10	16	30	DC Link Choke Built-in	URX000332	15	24	41
4A0072	15	24	43		URX000336	20	31	52
4A0088	15	24	44		URX000336	20	31	52
4A0103	15	24	45		URX000335	20	31	54
4A0139	30	46	84		URX000341	30	46	80
4A0165	30	46	85		URX000341	30	46	81
4A0208	50	75	136		URX000347	50	75	130
4A0250	60	89	162		URX000347	60	89	154
4A0296	60	89	165		URX000350	75	110	192
4A0362	75	110	205		URX000353	100	143	251
4A0414	100	143	267		URX000356	125	179	314
4A0515	100	143	275		URX000353	100	143	255
4A0675	125	179	345		URX000360	150	207	371

Table A.18 600 V Single-Phase Input (-5% to +10%), 575 V Three-Phase Motor

Drive Model	Without Additional Impedance			With Additional Impedance (use either DC type or AC type)				
	Output Capacity		Single Phase Input Load	Yaskawa Reactor Part Number		Output Capacity		Single Phase Input Load
	Motor Power (HP)	Motor FLA	Continuous Input Current (A)	DC Type	AC Type	Motor Power (HP)	Motor FLA	Continuous Input Current (A)
5A0003	1	1.7	3.5	05P00620-0110	URX000303	1.5	2.4	4.6
5A0004	1.5	2.4	4.8	URX000044	URX000306	2	2.7	5
5A0006	2	2.7	7	05P00652-0213	URX000308	3	3.9	7.6
5A0009	3	3.9	9.5	URX000049	URX000313	5	6.1	11
5A0011	2	2.7	7.1	05P00652-0213	URX000308	3	3.9	7.7
5A0017	5	6.1	16	URX000048	URX000316	5	6.1	12
5A0022	5	6.1	16	URX000053	URX000320	7.5	9	18
5A0027	7.5	9	24	URX000055	URX000324	10	11	23
5A0032	7.5	9	24	URX000055	URX000324	10	11	23
5A0041	10	11	24	DC Link Choke Built-in	URX000326	15	17	32
5A0052	15	17	34		URX000326	15	17	32
5A0062	20	22	47		URX000335	25	27	54
5A0077	25	27	57		URX000338	30	32	64
5A0099	30	32	66		URX000338	30	32	64
5A0125	40	41	86		URX000344	50	52	102
5A0145	40	41	86		URX000344	50	52	102
5A0192	60	62	130		URX000347	75	77	152
5A0242	75	77	159		URX000347	75	77	152

■ Rated Current Depending on Carrier Frequency

The table below shows the drive output current depending on the carrier frequency settings.

Normal Duty Rating (ND)

The 2 kHz values shown for ND in *Table A.21* are equal to the drive rated current shown on the drive nameplate. Increasing the carrier frequency above 2 kHz will reduce the ND rated output current of the drive as shown in *Table A.21*.

Heavy Duty Rating (HD)

A carrier frequency setting of 8 kHz or lower is equal to the drive rated current shown on the drive nameplate. The factory default setting for carrier frequency in HD mode is 2 kHz. Increasing the carrier frequency above 8 kHz will reduce the HD rated output current of the drive as shown in the following tables.

Use the data in the following tables to linearly calculate output current values for carrier frequencies not listed.

Refer to *Table A.22* when using AOLV/PM control mode.

Table A.19 Three-Phase 200 V Class Carrier Frequency and Current Derating

Three-Phase 200 V Class						
Drive Model	Rated Current [A]					
	Normal Duty Rating (ND)			Heavy Duty Rating (HD)		
	2 kHz	8 kHz	15 kHz	2 kHz	8 kHz	15 kHz
2A0004	3.5	3.2	2.56	3.2	3.2	2.56
2A0006	6	5	4	5	5	4
2A0008	8	6.9	5.5	6.9	6.9	5.5
2A0010	9.6	8	6.4	8	8	6.4
2A0012	12	11	8.8	11	11	8.8
2A0018	17.5	14	11.2	14	14	11.2
2A0021	21	17.5	14	17.5	17.5	14
2A0030	30	25	20	25	25	20

Three-Phase 200 V Class						
Drive Model	Rated Current [A]					
	Normal Duty Rating (ND)			Heavy Duty Rating (HD)		
	2 kHz	8 kHz	15 kHz	2 kHz	8 kHz	15 kHz
2A0040	40	33	26.4	33	33	26.4
2A0056	56	47	37.6	47	47	37.6
2A0069	69	60	48	60	60	48
2A0081	81	75	53	75	75	53
2A0110	110	85	60	85	85	60
2A0138	138	115	81	115	115	81

Three-Phase 200 V Class						
Drive Model	Rated Current [A]					
	Normal Duty Rating (ND)			Heavy Duty Rating (HD)		
	2 kHz	5 kHz	10 kHz	2 kHz	5 kHz	10 kHz
2A0169	169	145	116	145	145	116
2A0211	211	180	144	180	180	144
2A0250	250	215	172	215	215	172
2A0312	312	283	226	283	283	226
2A0360	360	346	277	346	346	277
2A0415	415	415	332	415	415	332

Table A.20 Three-Phase 400 V Class Carrier Frequency and Current Derating

Three-Phase 400 V Class						
Drive Model	Rated Current [A]					
	Normal Duty Rating (ND)			Heavy Duty Rating (HD)		
	2 kHz	8 kHz	15 kHz	2 kHz	8 kHz	15 kHz
4A0002	2.1	1.8	1.1	1.8	1.8	1.1
4A0004	4.1	3.4	2	3.4	3.4	2
4A0005	5.4	4.8	2.9	4.8	4.8	2.9
4A0007	6.9	5.5	3.3	5.5	5.5	3.3
4A0009	8.8	7.2	4.3	7.2	7.2	4.3
4A0011	11.1	9.2	5.5	9.2	9.2	5.5
4A0018	17.5	14.8	8.9	14.8	14.8	8.9
4A0023	23	18	10.8	18	18	10.8
4A0031	31	24	14.4	24	24	14.4
4A0038	38	31	18.6	31	31	18.6
4A0044	44	39	23.4	39	39	23.4
4A0058	58	45	27	45	45	27
4A0072	72	60	36	60	60	36
4A0088	88	75	45	75	75	45
4A0103	103	91	55	91	91	55

Three-Phase 400 V Class						
Drive Model	Rated Current [A]					
	Normal Duty Rating (ND)			Heavy Duty Rating (HD)		
	2 kHz	5 kHz	10 kHz	2 kHz	5 kHz	10 kHz
4A0139	139	112	78	112	112	78
4A0165	165	150	105	150	150	105
4A0208	208	180	126	180	180	126
4A0250	250	216	151	216	216	151
4A0296	296	260	182	260	260	182

Three-Phase 400 V Class						
Drive Model	Rated Current [A]					
	Normal Duty Rating (ND)			Heavy Duty Rating (HD)		
	2 kHz	5 kHz	10 kHz	2 kHz	5 kHz	10 kHz
4A0362	362	304	213	304	304	213
4A0414	414	370	259	370	370	259
4A0515	515	397	–	450	375	–
4A0675	675	528	–	605	504	–
4A0930	930	449	–	810	506	–
4A1200	1200	610	–	1090	681	–

Table A.21 Three-Phase 600 V Class Carrier Frequency and Current Derating

Three-Phase 600 V Class								
Drive Model	Rated Current [A]							
	Normal Duty Rating (ND)				Heavy Duty Rating (HD)			
	2 kHz	8 kHz	10 kHz	15 kHz	2 kHz	8 kHz	10 kHz	15 kHz
5A0003	2.7	2.2	2.0	1.3	1.7	1.7	1.5	1.0
5A0004	3.9	3.4	3.1	2.1	3.5	3.5	3.1	2.1
5A0006	6.1	4.9	4.3	2.9	4.1	4.1	3.6	2.5
5A0009	9	7.5	6.6	4.5	6.3	6.3	5.6	3.8
5A0011	11	9.3	8.2	5.6	9.8	9.8	8.7	5.9
5A0017	17	12	8.8	–	12.5	12.5	10	–
5A0022	22	17.0	13.6	–	17	17	13.6	–
5A0027	27	21.3	17.6	–	22	22	17.6	–
5A0032	32	26.8	21.6	–	27	27	21.6	–

Three-Phase 600 V Class								
Drive Model	Rated Current [A]							
	Normal Duty Rating (ND)				Heavy Duty Rating (HD)			
	2 kHz	5 kHz	8 kHz	10 kHz	2 kHz	5 kHz	8 kHz	10 kHz
5A0041	41.0	39.7	33.5	29.4	32.0	32.0	32.0	28.3
5A0052	52.0	50.3	42.5	37.3	41.0	41.0	41.0	36.2
5A0062	62.0	61.3	49.7	41.9	52.0	52.0	52.0	43.8
5A0077	77.0	76.2	61.7	52.0	62.0	62.0	62.0	52.2
5A0099	99.0	80.0	55.0	–	77.0	77.0	53.9	–

Three-Phase 600 V Class				
Drive Model	Rated Current [A]			
	Normal Duty Rating (ND)		Heavy Duty Rating (HD)	
	2 kHz	5 kHz	2 kHz	5 kHz
5A0125	125.0	85.2	99.0	75.3
5A0145	145.0	98.8	130.0	98.9
5A0192	192.0	137.9	172.0	149.5
5A0242	242.0	173.8	200.0	173.9

Table A.22 Three-Phase 200 V Class Carrier Frequency and Current Derating (AOLV/PM)

Three-Phase 200 V Class						
Drive Model	Rated Current [A]					
	Normal Duty Rating (ND)			Heavy Duty Rating (HD)		
	2 kHz	4 kHz	12 kHz	2 kHz	4 kHz	12 kHz
2A0004	3.5	3.5	2.3	3.2	3.2	2.3
2A0006	6	5.6	3.5	5	5	3.6

Three-Phase 200 V Class						
Drive Model	Rated Current [A]					
	Normal Duty Rating (ND)			Heavy Duty Rating (HD)		
	2 kHz	4 kHz	12 kHz	2 kHz	4 kHz	12 kHz
2A0008	8	7.4	4.9	6.9	6.9	4.9
2A0010	9.6	8.8	5.6	8	8	5.7
2A0012	12	11.6	7.9	11	11	7.9
2A0018	17.5	15.9	9.6	14	14	10
2A0021	21	19.6	12.1	17.5	17.5	12.5
2A0030	30	27.5	17.5	25	25	17.9
2A0040	40	36.7	23.4	33	33	23.6
2A0056	56	51	33	47	47	33.6
2A0069	69	64	43	60	60	43
2A0081	81	80	43	75	75	43
2A0110	110	99	55	85	85	49
2A0138	138	124	66	115	115	66

Three-Phase 200 V Class						
Drive Model	Rated Current [A]					
	Normal Duty Rating (ND)			Heavy Duty Rating (HD)		
	2 kHz	4 kHz	10 kHz	2 kHz	4 kHz	10 kHz
2A0169	169	146	78	145	139	87
2A0211	211	182	96	180	173	108
2A0250	250	217	116	215	206	129
2A0312	312	275	165	283	272	170
2A0360	360	324	217	346	332	208
2A0415	415	379	273	415	398	249

Table A.23 Three-Phase 400 V Class Carrier Frequency and Current Derating (AOLV/PM)

Three-Phase 400 V Class						
Drive Model	Rated Current [A]					
	Normal Duty Rating (ND)			Heavy Duty Rating (HD)		
	2 kHz	4 kHz	12 kHz	2 kHz	4 kHz	12 kHz
4A0002	2.1	2	0.8	1.8	1.8	0.8
4A0004	4.1	3.8	1.5	3.4	3.4	1.5
4A0005	5.4	5.3	2.1	4.8	4.8	2.1
4A0007	6.9	6.1	2.4	5.5	5.5	2.4
4A0009	8.8	8	3.1	7.2	7.2	3.1
4A0011	11.1	10.3	3.9	9.2	9.2	3.9
4A0018	17.5	16.5	6.3	14.8	14.8	6.3
4A0023	23	20.1	7.7	18	18	7.7
4A0031	30.9	26.7	10.3	24	24	10.3
4A0038	38	34.5	13.3	31	31	13.3
4A0044	44	41.6	17.3	39	39	16.7
4A0058	58	50	19	45	45	19
4A0072	72	67	26	60	60	26
4A0088	88	83	32	75	75	32
4A0103	103	100	39	91	91	39

Three-Phase 400 V Class						
Drive Model	Rated Current [A]					
	Normal Duty Rating (ND)			Heavy Duty Rating (HD)		
	2 kHz	4 kHz	10 kHz	2 kHz	4 kHz	10 kHz
4A0139	139	113	35	112	105	45
4A0165	165	139	62	150	141	60
4A0208	208	173	67	180	169	72
4A0250	250	208	81	216	203	86
4A0296	296	247	101	260	244	104
4A0362	362	298	106	304	286	122
4A0414	414	348	148	370	348	148
4A0515	515	338	–	450	338	–
4A0675	675	454	–	605	454	–
4A0930	930	609	–	810	608	–
4A1200	1200	807	–	1090	818	–

◆ Carrier Frequency Derating

Derate the drive according to *Figure A.1* to *Figure A.11* as the carrier frequency increases above the factory default setting.

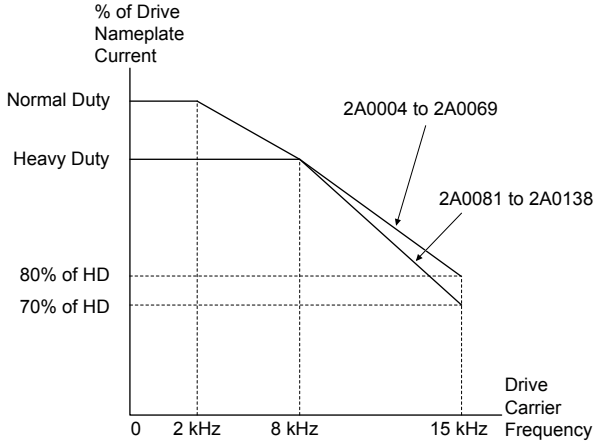

Figure A.1 Carrier Frequency Derating (Models 2A0004 to 2A0138)

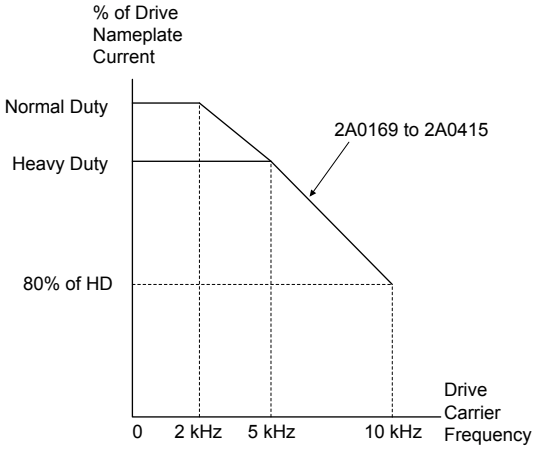

Figure A.2 Carrier Frequency Derating (Models 2A0169 to 2A0415)

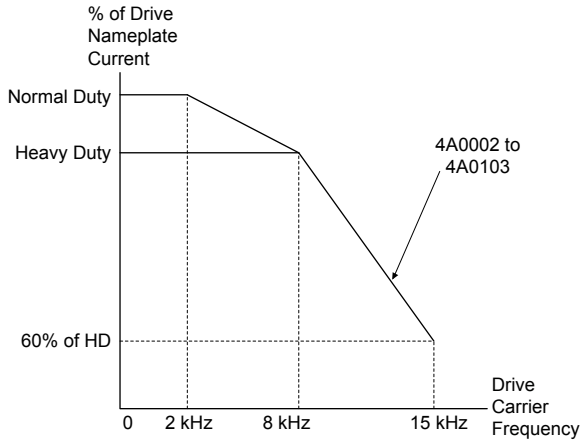

Figure A.3 Carrier Frequency Derating (Models 4A0002 to 4A0103)

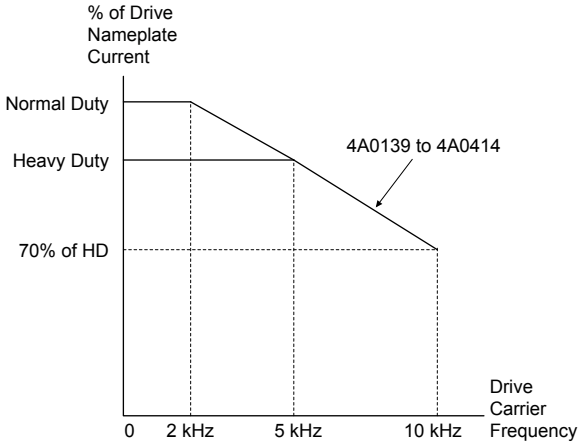

Figure A.4 Carrier Frequency Derating (Models 4A0139 to 4A0414)

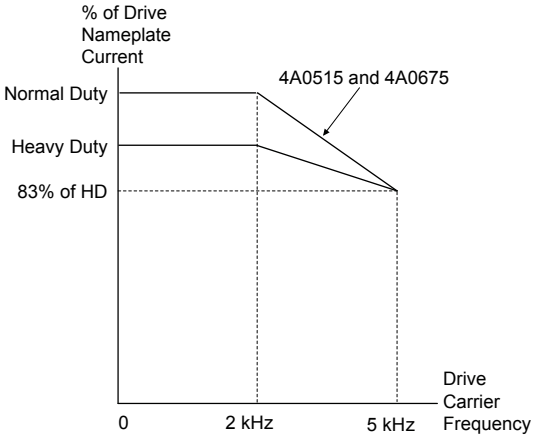

Figure A.5 Carrier Frequency Derating (Models 4A0515 and 4A0675)

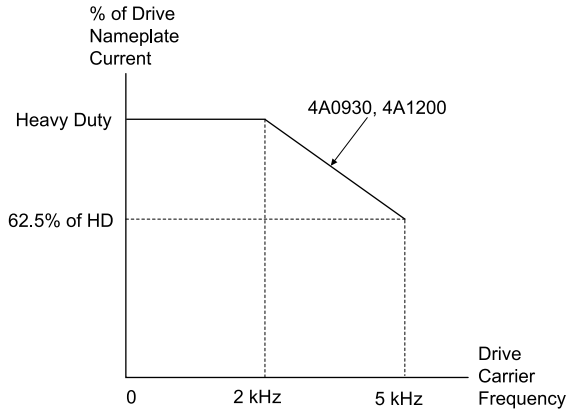

Figure A.6 Carrier Frequency Derating (Models 4A0930 and 4A1200 in Heavy Duty Rating Mode)

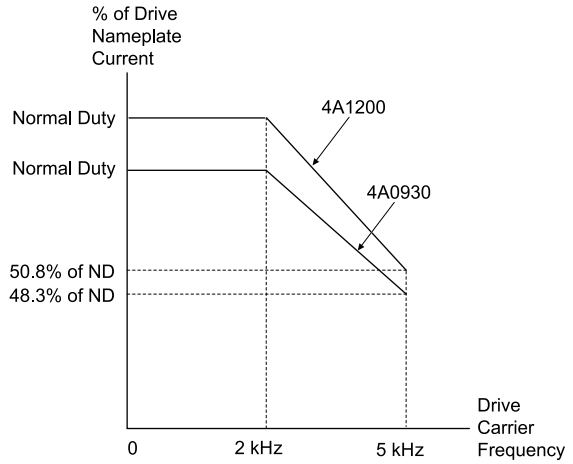

Figure A.7 Carrier Frequency Derating (Models 4A0930 and 4A1200 in Normal Duty Rating Mode)

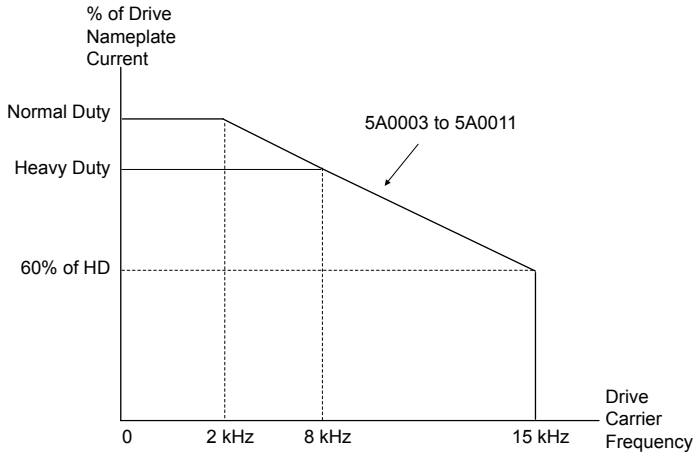

Figure A.8 Carrier Frequency Derating (Models 5A0003 to 5A0011)

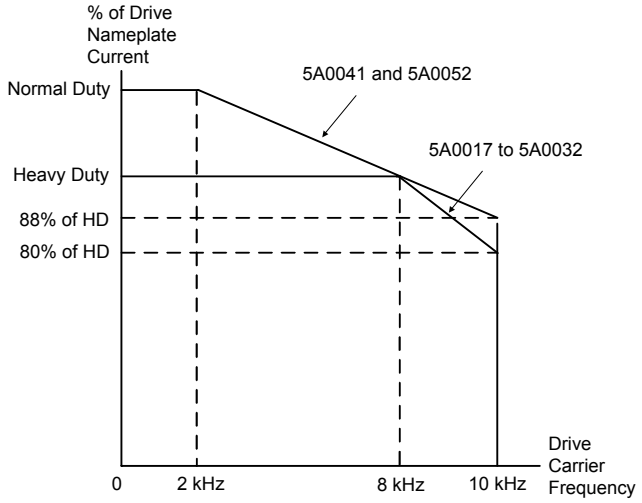

Figure A.9 Carrier Frequency Derating (Models 5A0017 to 5A0052)

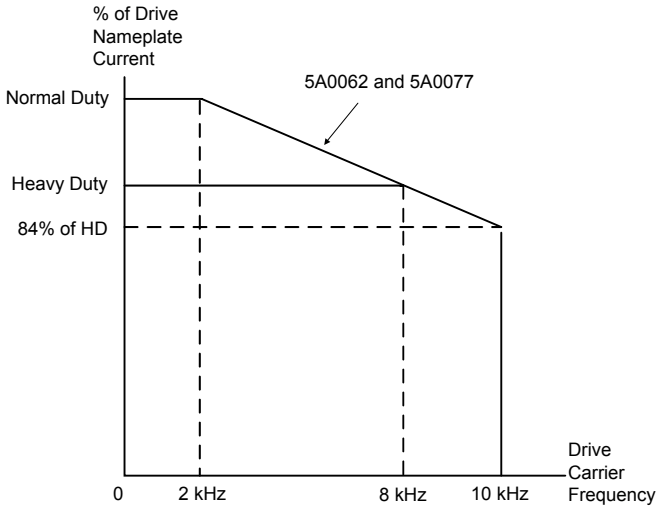

Figure A.10 Carrier Frequency Derating (Models 5A0062 and 5A0077)

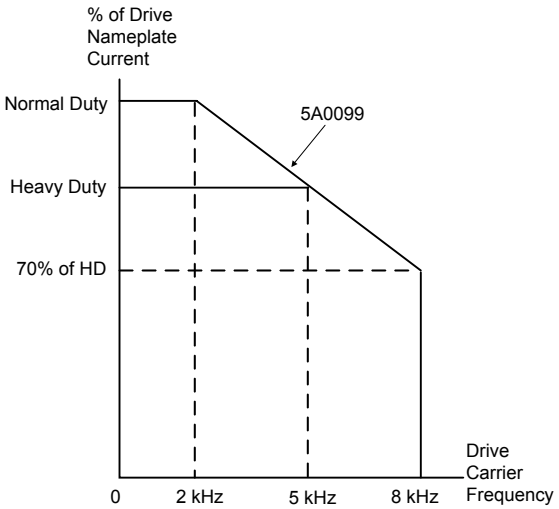

Figure A.11 Carrier Frequency Derating (Model 5A0099)

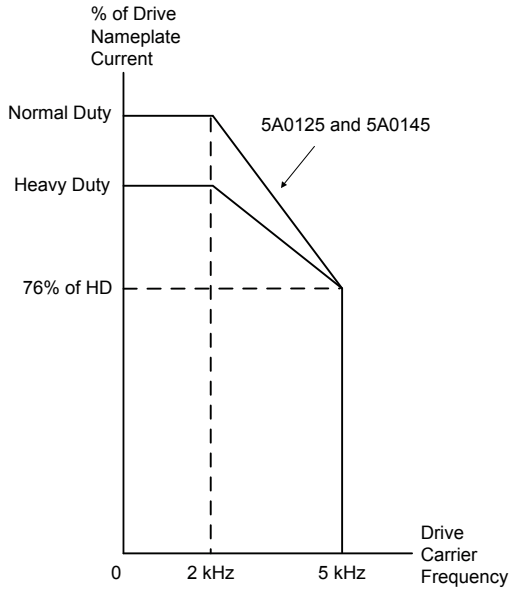

Figure A.12 Carrier Frequency Derating (Models 5A0125 and 5A0145)

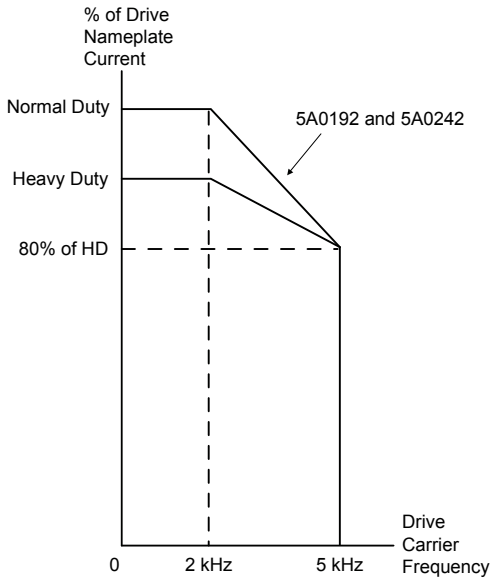

Figure A.13 Carrier Frequency Derating (Models 5A0192 and 5A0242)

◆ Temperature Derating

To ensure the maximum performance life, the drive output current must be derated as shown in *Figure A.14* when the drive is installed in areas with high ambient temperature or if drives are mounted side-by-side in a cabinet. In order to ensure reliable drive overload protection, set parameters L8-12 and L8-35 according to the installation conditions.

■ Parameter Settings

No.	Name	Description	Range	Def.
L8-12	Ambient Temperature Setting	Adjust the drive overload (oL2) protection level when the drive is installed in an environment that exceeds its ambient temperature rating.	-10 to +50	+40 °C
L8-35	Installation Method Selection	0: IP00/Open-Chassis Enclosure 1: Side-by-Side Mounting 2: IP20/NEMA 1, UL Type 1 Enclosure 3: External Heatsink Installation	0 to 3	<1>

<1> Default setting is determined by drive model.
Setting 0: (Models 2A0250 to 2A0415 and 4A0208 to 4A1200)

Setting 2: (Models 2A0004 to 2A0211, 4A0002 to 4A0165, and 5A0003 to 5A0242).

Setting 0: IP00/Open-Chassis Enclosure

Drive operation between -10 °C and +50 °C allows 100% continuous current without derating.

Setting 1: Side-by-Side Mounting

Drive operation between -10 °C and +30 °C allows 100% continuous current without derating. Operation between +30 °C and +50 °C requires output current derating.

Setting 2: IP20/NEMA 1, UL Type 1 Enclosure

Drive operation between -10 °C and +40 °C allows 100% continuous current without derating. Operation between +40 °C and +50 °C requires output current derating.

Setting 3: External Heatsink Installation

Drive operation between -10 °C and +40 °C allows 100% continuous current without derating. Operation between +40 °C and +50 °C requires output current derating.

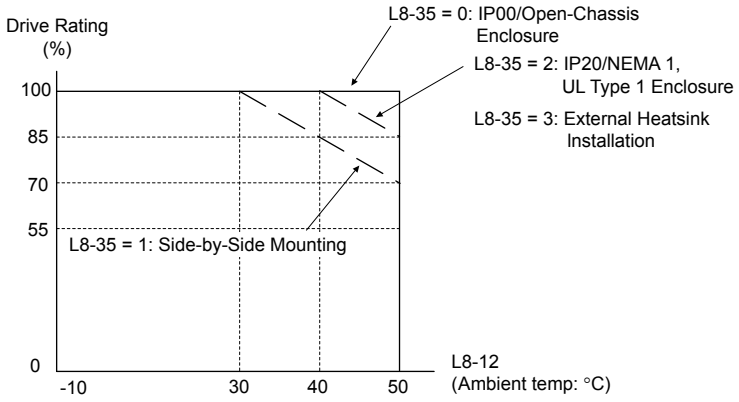

Figure A.14 Ambient Temperature and Installation Method Derating

◆ Altitude Derating

The drive standard ratings are valid for installation altitudes up to 1000 m. For installations from 1000 m to 3000 m, the drive rated voltage and the rated output current must be derated for 0.2% per 100 m.

Appendix: B

Parameter List

This appendix contains a full listing of all parameters and settings available in the drive.

B.1 UNDERSTANDING PARAMETER DESCRIPTIONS....556
B.2 PARAMETER GROUPS....557
B.3 A: INITIALIZATION PARAMETERS....559
B.4 B: APPLICATION....561
B.5 C: TUNING....571
B.6 D: REFERENCES....578
B.7 E: MOTOR PARAMETERS....584
B.8 F: OPTION SETTINGS....591
B.9 H PARAMETERS: MULTI-FUNCTION TERMINALS....603
B.10 L: PROTECTION FUNCTION....619
B.11 N: SPECIAL ADJUSTMENT....630
B.12 O: OPERATOR-RELATED SETTINGS....636
B.13 DRIVEWORKSEZ PARAMETERS....640
B.14 T: MOTOR TUNING....641
B.15 U: MONITORS....646
B.16 CONTROL MODE DEPENDENT PARAMETER DEFAULT VALUES....657
B.17 V/F PATTERN DEFAULT VALUES....661
B.18 DEFAULTS BY DRIVE MODEL AND DUTY RATING ND/HD....663
B.19 PARAMETERS CHANGED BY MOTOR CODE SELECTION (FOR PM MOTORS)....680

B.1 Understanding Parameter Descriptions

◆ Control Modes, Symbols, and Terms

The table below lists terms and symbols used in this section to indicate which parameters are available in which control modes.

Note: *Refer to Control Mode Selection on page 32* for detailed instructions on each control mode.

Table B.1 Symbols and Icons Used in Parameter Descriptions

Symbol	Description
All Modes	Parameter is available in all control modes.
V/f	Parameter is available when operating the drive with V/f Control.
V/f w PG	Parameter is available when operating the drive with V/f with PG Control.
OLV	Parameter is available when operating the drive with Open Loop Vector.
CLV	Parameter is available when operating the drive with Closed Loop Vector.
OLV/PM	Parameter is available when operating the drive with Open Loop Vector for PM motors.
AOLV/PM	Parameter is available when operating the drive with Advanced Open Loop Vector for PM motors.
CLV/PM	Parameter is available when operating the drive with Closed Loop Vector for PM motors.
□□□□□	Parameter is NOT available when operating the drive in the control mode.
RUN	Parameter can be changed during run.
Motor 2	Refers to a second motor when the drive is operating two motors. Switch between these motors using the multi-function input terminals.

B.2 Parameter Groups

Table B.2 Parameter Groups

Parameter Group	Name	Page
A1 <1>	Initialization Parameters	559
A2	User Parameters	560
b1 <1>	Operation Mode Selection	561
b2 <1>	DC Injection Braking and Short Circuit Braking	562
b3 <1>	Speed Search	563
b4 <1>	Timer Function	565
b5 <1>	PID Control	566
b6	Dwell Function	568
b7	Droop Control	569
b8 <1>	Energy Saving	569
b9	Zero Servo	570
C1	Acceleration and Deceleration Times	571
C2	S-Curve Characteristics	572
C3 <1>	Slip Compensation	572
C4	Torque Compensation	573
C5 <1>	Automatic Speed Regulator (ASR)	574
C6 <1>	Carrier Frequency	576
d1	Frequency Reference	578
d2	Frequency Upper/Lower Limits	580
d3	Jump Frequency	580
d4	Frequency Reference Hold and Up/Down 2 Function	580
d5	Torque Control	581
d6	Field Weakening and Field Forcing	582
d7	Offset Frequency	582
E1	V/f Pattern for Motor 1	584
E2 <1>	Motor 1 Parameters	586
E3	V/f Pattern for Motor 2	587
E4 <1>	Motor 2 Parameters	588
E5 <1>	PM Motor Settings	589
F1 <1>	PG Speed Control Card (PG-B3, PG-X3, PG-RT3, PG-F3)	591
F2	Analog Input Card (AI-A3)	594
F3	Digital Input Card (DI-A3)	594
F4	Analog Monitor Card (AO-A3)	595
F5	Digital Output Card (DO-A3)	595
F6	Communication Option Card (SI-C3, SI-S3, SI-N3, SI-P3, SI-T3, SI-EP3, SI-ES3, SI-B3, SI-W3)	596
F7	Communication Option Card (SI-EN3, SI-EM3, SI-EP3)	599

Parameter Group	Name	Page
H1	Multi-Function Digital Inputs	603
H2 <1>	Multi-Function Digital Outputs	608
H3 <1>	Multi-Function Analog Inputs	613
H4	Multi-Function Analog Outputs	615
H5 <1>	MEMOBUS/Modbus Serial Communication	616
H6	Pulse Train Input/Output	617
L1 <1>	Motor Protection	619
L2	Momentary Power Loss Ride-Thru	621
L3 <1>	Stall Prevention	622
L4	Speed Detection	624
L5	Fault Restart	624
L6	Torque Detection	625
L7	Torque Limit	626
L8 <1>	Drive Protection	627
L9 <1>	Drive Protection 2	629
n1	Hunting Prevention	630
n2	Speed Feedback Detection Control (AFR) Tuning	630
n3	High Slip Braking (HSB) and Overexcitation Braking	631
n5	Feed Forward Control	632
n6	Online Tuning	632
n8 <1>	PM Motor Control Tuning	632
o1	Digital Operator Display Selection	636
o2	Digital Operator Keypad Functions	637
o3	Copy Function	638
o4	Maintenance Monitor Settings	638
q	DriveWorksEZ Parameters	640
r	DriveWorksEZ Connection Parameters	640
T1 <1>	Induction Motor Auto-Tuning	641
T2 <1>	PM Motor Auto-Tuning	643
T3	ASR and Inertia Tuning	645
U1 <1>	Operation Status Monitors	646
U2 <1>	Fault Trace	649
U3	Fault History	650
U4 <1>	Maintenance Monitors	651
U5	PID Monitors	653
U6	Operation Status Monitors	654
U8	DriveWorksEZ Monitors	656

<1> Specifications differ for models 4A0930 and 4A1200. *Refer to Parameter Differences for Drive Models 4A0930 and 4A1200 on page 558* for details.

◆ Parameter Differences for Drive Models 4A0930 and 4A1200

Table B.3 Overview of 4A0930 and 4A1200 Parameter Differences by Parameter Group

Parameter Group	Name	Differences
A1	Initialization Parameters	Setting range differs for A1-00. *Refer to A1: Initialization on page 559* for details.
b1	Operation Mode Selection	b1-21 is not available.
b2	DC Injection Braking and Short Circuit Braking	b2-02, b2-03, and b2-04 are not available in OLV/PM control mode.
b3	Speed Search	• b3-04 is available in V/f and OLV control modes.*Refer to b3: Speed Search on page 563* for details. • b3-07, b3-12, and b3-26 are available. • b3-29 and b3-33 are not available.
b4	Timer Function	b4-03 to b4-08 are not available.
b5	PID Control	Setting range of b5-01 is 0 to 4.
b8	Energy Saving	b8-27 is not available.
C3	Slip Compensation	• C3-05 is available in OLV, CLV, AOLV/PM, and CLV/PM control modes. *Refer to C3: Slip Compensation on page 572* for details. • C3-16 to C3-18 are available.
C5	Automatic Speed Regulator (ASR)	C5-39 is not available.
C6	Carrier Frequency	• The setting range of C6-02 is 1, 2, or F • The setting range of C6-03 and C6-04 is 1.0 to 5.0 Hz. *Refer to C6: Carrier Frequency on page 576* for details. • C6-09 is not available.
E2	Motor 1 Parameters	Setting units differ for E2-05. *Refer to E2: Motor 1 Parameters on page 586* for details.
E4	Motor 2 Parameters	Setting units differ for E4-05. *Refer to E4: Motor 2 Parameters on page 588* for details.
E5	PM Motor Settings	Depends on the E5-25 setting. *Refer to E5: PM Motor Settings on page 589* for details.
F1	PG Speed Control Card (PG-B3, PG-X3, PG-RT3, PG-F3)	F1-50 to F1-53 are not available.
H2	Multi-Function Digital Outputs	• H2-07 to H2-10 are not available • H2-□□ cannot be set to D, 4E, 4F, 62, or 63.
H3	Multi-Function Digital Inputs	H3-□□ = 17 is available.
H5	MEMOBUS/Modbus Serial Communication	H5-18 is not available.
L1	Motor Protection	• L1-08 and L1-09 are not available. • L1-15 to L1-20 are available.
L3	Stall Prevention	• *Refer to L3: Stall Prevention on page 622* for details. • L3-04, L3-34, and L3-35 are not available.
L8	Drive Protection	• L8-01 and L8-55 are not available. • Setting range of L8-29 is 0 and 1. • L8-78 is available.
L9	Drive Protection 2	L9-03 is not available.
n8	PM Motor Control Timing	• n8-03, n8-04, n8-11 to n8-21, n8-36 to n8-39, and n8-72 are not available. • n8-02 is not available in CLV/PM control mode.
T1	Induction Motor Auto-Tuning	The setting range of T1-01 is 0 to 4, 8, or 9.
T2	PM Motor Auto-Tuning	The setting range of T2-01 is 0 to 11.
U1	Operation Status Monitors	• Setting units differ for U1-03. *Refer to U1: Operation Status Monitors on page 646* for details. • U1-29 is available.
U2	Fault Trace	• Setting units differ for U2-05. *Refer to U2: Fault Trace on page 649* for details. • U2-27 and U2-28 are available.
U4	Maintenance Monitors	• The setting unit for U4-13 is 1 A. *Refer to U4: Maintenance Monitors on page 651* for details. • U4-32, U4-37, U4-38, and U4-39 are available.

B.3 A: Initialization Parameters

The A parameter group creates the operating environment for the drive. This includes the parameter Access Level, Motor Control Method, Password, User Parameters and more.

◆ A1: Initialization

No. (Addr. Hex)	Name	LCD Display	Description	Values	Page
A1-00 (0100) RUN <1>	Language Selection	Select Language 0: English 1: ニホンゴ (Japanese) 2: Deutsch 3: Français 4: Italiano 5: Español 6: Português 7: 中文 8: Czech 9: Russian 10: Turkish 11: Polish 12: Greek	All Modes 0: English 1: Japanese 2: German 3: French 4: Italian 5: Spanish 6: Portuguese 7: Chinese 8: Czech 9: Russian 10: Turkish 11: Polish 12: Greek **Note:** Settings 8 to 12 can only be selected from an LCD operator with version REV: F or later. The version is listed on the back of the operator.	Default: 0 Range: 0 to 12 <2>	198
A1-01 (0101) RUN <3>	Access Level Selection	Access Level 0: Operation Only 1: User Parameters 2: Advanced Level	All Modes 0: View and set A1-01 and A1-04. U□-□□ parameters can also be viewed. 1: User Parameters (access to a set of parameters selected by the user, A2-01 to A2-32) 2: Advanced Access (access to view and set all parameters)	Default: 2 Range: 0 to 2	198
A1-02 (0102) <1>	Control Method Selection	Control Method 0: V/f Control 1: V/f with PG 2: Open Loop Vector 3: Closed Loop Vect 5: PM OpenLoop Vect 6: PM AdvOpLoopVect 7: PM ClosedLoopVct	All Modes 0: V/f Control 1: V/f Control with PG 2: Open Loop Vector Control 3: Closed Loop Vector Control 5: Open Loop Vector Control for PM 6: Advanced Open Loop Vector Control for PM 7: Closed Loop Vector Control for PM	Default: 2 Range: 0 to 3; 5 to7	199
A1-03 (0103)	Initialize Parameters	Init Parameters 0: No Initialize 1110: User Initialize 2220: 2-Wire Initial 3330: 3-Wire Initial 5550: Term->Cntrl Int	All Modes 0: No initialization 1110: User Initialize (parameter values must be stored using parameter o2-03) 2220: 2-Wire initialization 3330: 3-Wire initialization 5550: oPE04 error reset	Default: 0 Range: 0 to 3330; 5550	199
A1-04 (0104)	Password	Enter Password	All Modes When the value set into A1-04 does not match the value set into A1-05, parameters A1-01 through A1-03, A1-06, A1-07, and A2-01 through A2-32 cannot be changed.	Default: 0000 Min.: 0000 Max.: 9999	200
A1-05 (0105)	Password Setting	Select Password	All Modes When the value set into A1-04 does not match the value set into A1-05, parameters A1-01 through A1-03, A1-06, A1-07, and A2-01 through A2-32 cannot be changed.	Default: 0000 Min.: 0000 Max.: 9999	200
A1-06 (0127)	Application Preset	Application Sel 0: General 1: Pump 2: Conveyor 3: Exhaust Fan 4: Supply Fan 5: Compressor	All Modes 0: General-purpose 1: Water supply pump 2: Conveyor 3: Exhaust fan 4: HVAC fan 5: Air compressor	Default: 0 Range: 0 to 5	203
A1-07 (0128)	DriveWorksEZ Function Selection	DWEZ Func Sel 0: Disabled 1: Enabled 2: Terminal Control	All Modes 0: DWEZ Disabled 1: DWEZ Enabled 2: Digital input (enabled when H1-□□ = 9F)	Default: 0 Range: 0 to 2	203

<1> Parameter setting value is not reset to the default value when the drive is initialized.
<2> Setting range is 0 to 7 in models 4A0930 and 4A1200.
<3> Default setting value is determined by he Application Preset selected in parameter A1-06.

◆ A2: User Parameters

No. (Addr. Hex)	Name	LCD Display	Description	Values	Page
A2-01 to A2-32 (0106 to 0125)	User Parameters 1 to 32	User Param 1 - 32	**All Modes** Recently edited parameters are listed here. The user can also select parameters to appear here for quicker access.	Default: <1> Range: b1-01 to o4-13	203
A2-33 (0126)	User Parameter Automatic Selection	User Parms Sel 0: Disabled 1: Enabled	**All Modes** 0: Parameters A2-01 to A2-32 are reserved for the user to create a list of User Parameters. 1: Save history of recently viewed parameters. Recently edited parameters will be saved to A2-17 through A2-32 for quicker access.	Default: 1 <2> Range: 0, 1	203

<1> Default setting value is determined by the Application Preset selected in parameter A1-06.
<2> Default setting value is determined by parameter A1-06. Default is 0 when A1-06 = 0, and 1 when A1-06 ≠ 0.

B.4 b: Application

Application parameters configure the source of the Run command, DC Injection Braking, Speed Search, timer functions, PID control, the Dwell function, Energy Savings, and a variety of other application-related settings.

◆ b1: Operation Mode Selection

No. (Addr. Hex)	Name	LCD Display	Description	Values	Page
b1-01 (0180)	Frequency Reference Selection 1	Ref Source 1 0: Operator 1: Analog Input 2: Serial Com 3: Option PCB 4: Pulse Input	**All Modes** 0: Digital operator 1: Analog input terminals 2: MEMOBUS/Modbus communications 3: Option PCB 4: Pulse input (terminal RP)	Default: 1 Range: 0 to 4	205
b1-02 (0181)	Run Command Selection 1	Run Source 1 0: Operator 1: Digital Inputs 2: Communication 3: Option PCB	**All Modes** 0: Digital operator 1: Digital input terminals 2: MEMOBUS/Modbus communications 3: Option PCB	Default: 1 Range: 0 to 3	206
b1-03 (0182)	Stopping Method Selection	Stopping Method 0: Ramp to Stop 1: Coast to Stop 2: DCInj to Stop 3: Coast w/Timer	**All Modes** 0: Ramp to stop 1: Coast to stop 2: DC Injection Braking to stop 3: Coast with timer	Default: 0 Range: 0 to 3 <I>	207
b1-04 (0183)	Reverse Operation Selection	Reverse Oper 0: Reverse Enabled 1: Reverse Disabled	**All Modes** 0: Reverse enabled. 1: Reverse disabled.	Default: 0 Range: 0, 1	210
b1-05 (0184)	Action Selection below Minimum Output Frequency	Zero-Speed Oper 0: RUN at Freq Ref 1: STOP 2: RUN at Min Freq RUN at Zero PRM	V/f, V/f w PG, OLV, **CLV**, OLV/PM, AOLV/PM, **CLV/PM** 0: Operates according to frequency reference (E1-09 is disabled). 1: Output shuts off (coast to stop if less than E1-09). 2: Operates according to E1-09 (frequency reference set to E1-09). 3: Zero speed (frequency reference becomes zero when less than E1-09).	Default: 0 Range: 0 to 3	210
b1-06 (0185)	Digital Input Reading	Cntl Input Scans 0: 1 Scan 1: 2 Scans	**All Modes** 0: Input status is read once and processed immediately (for quicker response) 1: Input is read twice and processed only if the status is the same in both readings (robust against noisy signals)	Default: 1 Range: 0, 1	211
b1-07 (0186)	LOCAL/REMOTE Run Selection	LOC/REM Dur Run 0: Cycle Extrn RUN 1: Accept Extrn RUN	**All Modes** 0: An external Run command must be cycled at the new source in order to be activated. 1: An external Run command at the new source is accepted immediately.	Default: 0 Range: 0, 1	212
b1-08 (0187)	Run Command Selection in Programming Mode	RUN dur PRG Mode 0: Run Disabled@PRG 1: Run Enabled@PRG 2: Prg only @ Stop	**All Modes** 0: Run command is not accepted while in Programming Mode. 1: Run command is accepted while in Programming Mode. 2: Prohibit entering Programming Mode during run.	Default: 0 Range: 0 to 2	212
b1-14 (01C3)	Phase Order Selection	Rotation Sel 0: Standard 1: SwitchPhaseOrder	**V/f**, **V/f w PG**, **OLV**, **CLV**, **OLV/PM**, **AOLV/PM**, CLV/PM 0: Standard 1: Switch phase order (reverses the direction of the motor)	Default: 0 Range: 0, 1	212

No. (Addr. Hex)	Name	LCD Display	Description	Values	Page
b1-15 (01C4)	Frequency Reference Selection 2	Ref Source 2 0: Operator 1: Analog Input 2: Serial Com 3: Option PCB 4: Pulse Input	All Modes Enabled when an input terminal set for "External reference" (H1-□□ = 2) closes. 0: Digital operator 1: Terminals (analog input terminals) 2: MEMOBUS/Modbus communications 3: Option card 4: Pulse train input	Default: 0 Range: 0 to 4	213
b1-16 (01C5)	Run Command Selection 2	Run Source 2 0: Operator 1: Digital Inputs 2: Communication 3: Option PCB	All Modes Enabled when a terminal set for "External reference" (H1-□□ = 2) closes. 0: Digital operator 1: Digital input terminals 2: MEMOBUS/Modbus communications 3: Option card	Default: 0 Range: 0 to 3	213
b1-17 (01C6)	Run Command at Power Up	Run Cmd @ Pwr On 0: Cycle Ext Run 1: Accept Ext Run	All Modes 0: Disregarded. A new Run command must be issued after power up. 1: Allowed. Motor will start immediately after power up if a Run command is already enabled.	Default: 0 Range: 0, 1	213
b1-21 (0748) <2>	Start Condition Selection at Closed Loop Vector Control	PG Start Sel 0: RejectRunCmd 1: AcceptRunCmd	V/f, V/f w PG, OLV, CLV, OLV/PM, AOLV/PM, CLV/PM Selects a condition to start CLV control. There is normally no need to change this parameter from the default value. 0: Run command is not accepted when b2-01 ≤ motor speed < E1-09 1: Run command is accepted when b2-01 ≤ motor speed < E1-09 **Note:** This parameter is not available in models 4A0930 and 4A1200.	Default: 0 Range: 0, 1	213

<1> Setting range is 0, 1, 3 in CLV, OLV/PM, AOLV/PM, and CLV/PM control modes.

<2> Available in drive software versions PRG: 1018 and later.

◆ b2: DC Injection Braking and Short Circuit Braking

No. (Addr. Hex)	Name	LCD Display	Description	Values	Page
b2-01 (0189)	DC Injection Braking Start Frequency	DCInj Start Freq	All Modes Sets the frequency at which DC Injection Braking starts when "Ramp to stop" (b1-03 = 0) is selected.	Default: <1> Min.: 0.0 Hz Max.: 10.0 Hz	213
b2-02 (018A)	DC Injection Braking Current	DCInj Current	V/f, V/f w PG, OLV, CLV, OLV/PM, AOLV/PM, CLV/PM Sets the DC Injection Braking current as a percentage of the drive rated current. **Note:** This parameter is not available in AOLV/PM in models 4A0930 and 4A1200.	Default: 50% Min.: 0 Max.: 100	214
b2-03 (018B)	DC Injection Braking Time at Start	DCInj Time@Start	All Modes Sets DC Injection Braking (Zero Speed Control when in CLV and CLV/PM) time at start. Disabled when set to 0.00 seconds. **Note:** This parameter is not available in AOLV/PM in models 4A0930 and 4A1200.	Default: 0.00 s Min.: 0.00 Max.: 10.00	214
b2-04 (018C)	DC Injection Braking Time at Stop	DCInj Time@Stop	All Modes Sets DC Injection Braking (Zero Speed Control when in CLV and CLV/PM) time at stop. **Note:** This parameter is not available in AOLV/PM in models 4A0930 and 4A1200.	Default: <1> Min.: 0.00 s Max.: 10.00 s	215

No. (Addr. Hex)	Name	LCD Display	Description	Values	Page
b2-08 (0190)	Magnetic Flux Compensation Value	Field Comp	V/f, V/f w PG, **OLV**, CLV, OLV/PM, AOLV/PM, CLV/PM Sets the magnetic flux compensation as a percentage of the no-load current value (E2-03).	Default: 0% Min.: 0 Max.: 1000	215
b2-12 (01BA)	Short Circuit Brake Time at Start	SC Brake T@Start	V/f, V/f w PG, OLV, CLV, **OLV/PM**, **AOLV/PM**, CLV/PM Sets the time for Short Circuit Braking operation at start. <2>	Default: 0.00 s Min.: 0.00 Max.: 25.50	215
b2-13 (01BB)	Short Circuit Brake Time at Stop	SC Brake T@Stop	V/f, V/f w PG, OLV, CLV, **OLV/PM**, **AOLV/PM**, CLV/PM Sets the Short Circuit Braking operation time at stop. <2>	Default: 0.50 s Min.: 0.00 Max.: 25.50	215
b2-18 (0177)	Short Circuit Braking Current	Shrt Cir Brk I	V/f, V/f w PG, OLV, CLV, **OLV/PM**, **AOLV/PM**, CLV/PM Determines the current level for Short Circuit Braking. Set as a percentage of the motor rated current.	Default: 100.0% Min.: 0.0 Max.: 200.0	216

<1> Default setting is determined by parameter A1-02, Control Method Selection.

<2> A coasting motor may require a braking resistor circuit to bring the motor to a stop in the required time.

◆ b3: Speed Search

No. (Addr Hex.)	Name	LCD Display	Description	Values	Page
b3-01 (0191)	Speed Search Selection at Start	SpdSrch at Start 0: Disabled 1: Enabled	**V/f**, **V/f w PG**, **OLV**, CLV, **OLV/PM**, **AOLV/PM**, CLV/PM 0: Disabled 1: Enabled	Default: <1> Range: 0, 1	219
b3-02 (0192)	Speed Search Deactivation Current	SpdSrch DeactCur	**V/f**, V/f w PG, **OLV**, CLV, OLV/PM, AOLV/PM, CLV/PM Sets the current level at which the speed is assumed to be detected and Speed Search is ended. Set as a percentage of the drive rated current.	Default: <1> Min.: 0% Max.: 200%	219
b3-03 (0193)	Speed Search Deceleration Time	SpdSrch Dec Time	**V/f**, V/f w PG, **OLV**, CLV, OLV/PM, AOLV/PM, CLV/PM Sets output frequency reduction time during Speed Search.	Default: 2.0 s Min.: 0.1 Max.: 10.0	219
b3-04 (0194)	V/f Gain during Speed Search	SpdSrch V/f	**V/f**, V/f w PG, OLV, CLV, OLV/PM, AOLV/PM, CLV/PM Determines how much to lower the V/f ratio during Speed Search. Output voltage during Speed Search equals the V/f setting multiplied by b3-04. **Note:** Available control mode for parameter b3-04 varies by drive model: Models 2A0004 to 2A0415, 4A0002 to 4A0675, and 5A0003 to 5A0242: Available when A1-02 = 0 Models 4A0930 and 4A1200: Available when A1-02 = 0, 2	Default: <2> Min.: 10% Max.: 100%	219
b3-05 (0195)	Speed Search Delay Time	Search Delay	**All Modes** When using an external contactor on the output side, b3-05 delays executing Speed Search after a momentary power loss to allow time for the contactor to close.	Default: 0.2 s Min.: 0.0 Max.: 100.0	219
b3-06 (0196)	Output Current 1 during Speed Search	Srch Im Lvl1	**V/f**, **V/f w PG**, **OLV**, CLV, OLV/PM, AOLV/PM, CLV/PM Sets the current injected to the motor at the beginning of Speed Estimation Speed Search. Set as a coefficient for the motor rated current.	Default: <2> Min.: 0.0 Max.: 2.0	220

No. (Addr Hex.)	Name	LCD Display	Description	Values	Page
b3-07 (0197)	Output Current 2 during Speed Search (Speed Estimation Type)	Srch Im Lvl2	**V/f** **V/f w PG** **OLV** CLV OLV/PM AOLV/PM CLV/PM Sets the amount of output current during Speed Estimation Speed Search as a coefficient for the no-load current. **Note:** This parameter is only available in models 4A0930 and 4A1200.	Default: <2> Min.: 0.0 Max.: 5.0	220
b3-08 (0198)	Current Control Gain during Speed Search (Speed Estimation Type)	Srch ACR P Gain	**V/f** **V/f w PG** **OLV** **CLV** **OLV/PM** **AOLV/PM** CLV/PM Sets the proportional gain for the current controller to adjust responsiveness during Speed Estimation Speed Search. There is normally no need to change this parameter from the default setting.	Default: <3> Min.: 0.00 Max.: 6.00	220
b3-09 (0199)	Current Control Integral Time during Speed Search (Speed Estimation Type)	Srch ACR I Time	**V/f** **V/f w PG** **OLV** **CLV** **OLV/PM** **AOLV/PM** CLV/PM Sets the integral time for the current controller during to adjust responsiveness during Speed Estimation Speed Search. There is normally no need to change this parameter from the default value.	Default: <1> Min.: 0.0 ms Max.: 1000.0 ms	220
b3-10 (019A)	Speed Search Detection Compensation Gain	Srch Detect Comp	**V/f** V/f w PG **OLV** CLV OLV/PM AOLV/PM CLV/PM Sets the gain which is applied to the speed detected by Speed Estimation Speed Search before the motor is reaccelerated. Increase this setting if ov occurs when performing Speed Search after a relatively long period of baseblock.	Default: 1.05 Min.: 1.00 Max.: 1.20	220
b3-12 (019C)	Minimum Current Detection Level during Speed Search	Srch I Deadband	**V/f** **V/f w PG** **OLV** CLV OLV/PM AOLV/PM CLV/PM Sets the minimum current detection level during Speed Search. **Note:** This parameter is only available in models 4A0930 and 4A1200.	Default: 6.0 Min.: 2.0 Max.: 10.0	220
b3-14 (019E)	Bi-Directional Speed Search Selection	Bidir Search Sel 0: Disabled 1: Enabled	**V/f** **V/f w PG** **OLV** CLV OLV/PM AOLV/PM CLV/PM 0: Disabled (uses the direction of the frequency reference) 1: Enabled (drive detects which way the motor is rotating)	Default: <1> Range: 0, 1	221
b3-17 (01F0)	Speed Search Restart Current Level	SrchRestart Lvl	**V/f** V/f w PG **OLV** CLV OLV/PM AOLV/PM CLV/PM Sets the Speed Search restart current level as a percentage of the drive rated current.	Default: 150% Min.: 0 Max.: 200	221
b3-18 (01F1)	Speed Search Restart Detection Time	SrchRestart Time	**V/f** V/f w PG **OLV** CLV OLV/PM AOLV/PM CLV/PM Sets the time to detect Speed Search restart.	Default: 0.10 s Min.: 0.00 Max.: 1.00	221
b3-19 (01F2)	Number of Speed Search Restarts	Num of SrchRestr	**V/f** V/f w PG **OLV** CLV **OLV/PM** **AOLV/PM** CLV/PM Sets the number of times the drive can attempt to restart when performing Speed Search.	Default: 3 Min.: 0 Max.: 10	221
b3-24 (01C0)	Speed Search Method Selection	SpdSrch Method 0: CurrentDetection 1: Speed Estimation	**V/f** **V/f w PG** **OLV** CLV OLV/PM AOLV/PM CLV/PM 0: Current Detection 1: Speed Estimation	Default: 0 Range: 0, 1	221
b3-25 (01C8)	Speed Search Wait Time	SpdSrch WaitTime	**V/f** V/f w PG **OLV** CLV **OLV/PM** **AOLV/PM** CLV/PM Sets the time the drive must wait between each Speed Search restart attempt.	Default: 0.5 s Min.: 0.0 Max.: 30.0	221

No. (Addr Hex.)	Name	LCD Display	Description	Values	Page
b3-26 (01C7)	Direction Determining Level	Spd Search Meth	V/f, V/f w PG, OLV, CLV, OLV/PM, AOLV/PM, CLV/PM Sets the level that determines the direction of motor rotation. **Note:** This parameter is only available in models 4A0930 and 4A1200.	Default: <2> Min.: 40 Max.: 60000	221
b3-27 (01C9)	Start Speed Search Select	SPD Search By AI 0: start from 0 1: start SPD	V/f, V/f w PG, OLV, CLV, OLV/PM, AOLV/PM, CLV/PM Selects a condition to activate Speed Search Selection at Start (b3-01) or External Speed Search Command 1 or 2 from the multi-function input. 0: Triggered when a Run command is issued (normal). 1: Triggered when an external baseblock is released.	Default: 0 Range: 0, 1	222
b3-29 (077C) <4>	Speed Search Induced Voltage Level	SpdSrch Ind Vlvl	V/f, V/f w PG, OLV, CLV, OLV/PM, AOLV/PM, CLV/PM Performs Speed Search when the motor induced voltage exceeds the set level. There is normally no need to change this parameter from the default value, but if changes are necessary, try lowering this value in small increments. When set too low, the drive will not perform Speed Search. **Note:** This parameter is not available in models 4A0930 and 4A1200.	Default: 10% Min.: 0 Max.: 10	222
b3-33 (0B3F) <5>	Speed Search Selection when Run Command is Given during Uv	SpdSrch Start UV 0: Disabled 1: Enabled	All Modes Activates and deactivates Speed Search at start in accordance with whether a Run command was issued during an undervoltage (Uv) condition. Function is active when a momentary power loss (L2-01 = 1 or 2), Speed Search at start (b3-01 = 1), and coasting to a stop (b1-03 = 1) are enabled. 0: Disabled 1: Enabled **Note:** This parameter is not available in models 4A0930 and 4A1200.	Default: 0 Range: 0, 1	222

<1> Default setting is determined by parameter A1-02, Control Method Selection.
<2> Default setting is determined by parameter o2-04, Drive Model Selection.
<3> Default setting is determined by parameters A1-02, Control Method Selection, and o2-04, Drive Model Selection.
<4> Available in drive software versions PRG: 1018 and later.
<5> Available in drive software versions PRG: 1019 and later.

◆ b4: Timer Function

No. (Addr. Hex)	Name	LCD Display	Description	Values	Page
b4-01 (01A3)	Timer Function On-Delay Time	Delay-ON Timer	All Modes Sets the on-delay and off-delay times for a digital timer output (H2-□□ = 12). The output is triggered by a digital input programmed to H1-□□ = 18).	Default: 0.0 s Min.: 0.0 Max.: 3000.0	222
b4-02 (01A4)	Timer Function Off-Delay Time	Delay-OFF Timer		Default: 0.0 s Min.: 0.0 Max.: 3000.0	222

No. (Addr. Hex)	Name	LCD Display	Description	Values	Page
b4-03 (0B30) <1>	H2-01 ON Delay Time	H2-01 ON Delay	All Modes Sets the length of the delay time for contact outputs to open or close for the related functions set in H2-□□. **Note:** This parameter is not available in models 4A0930 and 4A1200.	Default: 0 ms Min.: 0 Max.: 65535	223
b4-04 (0B31) <1>	H2-01 OFF Delay Time	H2-01 OFF Delay			
b4-05 (0B32) <1>	H2-02 ON Delay Time	H2-02 ON Delay			
b4-06 (0B33) <1>	H2-02 OFF Delay Time	H2-02 OFF Delay			
b4-07 (0B34) <1>	H2-03 ON Delay Time	H2-03 ON Delay			
b4-08 (0B35) <1>	H2-03 OFF Delay Time	H2-03 OFF Delay			

<1> Available in drive software versions PRG: 1019 and later.

◆ b5: PID Control

No. (Addr. Hex)	Name	LCD Display	Description	Values	Page
b5-01 (01A5)	PID Function Setting	PID Mode 0: Disabled 1: Enabled D=Fdbk 2: Enabled D=Fdfwd 3: Fref+PID D=Fdbk 4: Fref+PID D=Fdfwd 5: Enabled D=Fdbk2 6: Enabled D=Fdfwd2 7: Fref+PID D=Fdbk2 8: Fref +PIDD=Fdfwd2	All Modes 0: Disabled 1: Enabled (PID output becomes output frequency reference, deviation D controlled) 2: Enabled (PID output becomes output frequency reference, feedback D controlled) 3: Enabled (PID output added to frequency reference, deviation D controlled) 4: Enabled (PID output added to frequency reference, feedback D controlled) 5: Mode compatible with setting 1 of similar products from a previous product line 6: Mode compatible with setting 2 of similar products from a previous product line 7: Mode compatible with setting 3 of similar products from a previous product line 8: Mode compatible with setting 4 of similar products from a previous product line **Note:** 1. If the drive is replaced with Varispeed F7 drive or a similar product from a previous product line, use settings 5 to 8 instead of settings 1 to 4. 2. Settings 5 to 8 are not available in models 4A0930 and 4A1200.	Default: 0 <1> Range: 0 to 8 <2>	227
b5-02 (01A6) RUN	Proportional Gain Setting (P)	PID Gain	All Modes Sets the proportional gain of the PID controller.	Default: 1.00 Min.: 0.00 Max.: 25.00	227
b5-03 (01A7) RUN	Integral Time Setting (I)	PID I Time	All Modes Sets the integral time for the PID controller.	Default: 1.0 s Min.: 0.0 Max.: 360.0	227
b5-04 (01A8) RUN	Integral Limit Setting	PID I Limit	All Modes Sets the maximum output possible from the integrator as a percentage of the maximum output frequency.	Default: 100.0% Min.: 0.0 Max.: 100.0	227
b5-05 (01A9) RUN	Derivative Time (D)	PID D Time	All Modes Sets D control derivative time.	Default: 0.00 s Min.: 0.00 Max.: 10.00	227

No. (Addr. Hex)	Name	LCD Display	Description	Values	Page
b5-06 (01AA) RUN	PID Output Limit	PID Limit	All Modes Sets the maximum output possible from the entire PID controller as a percentage of the maximum output frequency.	Default: 100.0% Min.: 0.0 Max.: 100.0	228
b5-07 (01AB) RUN	PID Offset Adjustment	PID Offset	All Modes Applies an offset to the PID controller output. Set as a percentage of the maximum output frequency.	Default: 0.0% Min.: -100.0 Max.: 100.0	228
b5-08 (01AC) RUN	PID Primary Delay Time Constant	PID Delay Time	All Modes Sets a low pass filter time constant on the output of the PID controller.	Default: 0.00 s Min.: 0.00 Max.: 10.00	228
b5-09 (01AD)	PID Output Level Selection	Output Level Sel 0: Normal Character 1: Rev Character	All Modes 0: Normal output (direct acting) 1: Reverse output (reverse acting)	Default: 0 Range: 0, 1	228
b5-10 (01AE) RUN	PID Output Gain Setting	Output Gain	All Modes Sets the gain applied to the PID output.	Default: 1.00 Min.: 0.00 Max.: 25.00	228
b5-11 (01AF)	PID Output Reverse Selection	Output Rev Sel 0: 0 limit 1: Reverse	All Modes 0: Negative PID output triggers zero limit. 1: Rotation direction reverses with negative PID output. **Note:** When using setting 1, make sure reverse operation is permitted by b1-04.	Default: 0 Range: 0, 1	228
b5-12 (01B0)	PID Feedback Loss Detection Selection	Fb loss Det Sel 0: Disabled 1: Alarm @ PID Enbl 2: Fault @ PID Enbl 3: DO Only - Always 4: Alarm - Always 5: Fault - Always	All Modes 0: No fault. Digital output only. 1: Fault detection. Alarm output, drive continues operation. 2: Fault detection. Fault output, drive output is shut off. 3: No fault. Digital output only. No fault detection when PID control is disabled. 4: Fault detection. Alarm is triggered and drive continues to run. Fault detection even when PID is disabled. 5: Fault detection. Drive output shuts off. No fault detection when PID control is disabled.	Default: 0 Range: 0 to 5	229
b5-13 (01B1)	PID Feedback Loss Detection Level	Fb loss Det Lvl	All Modes Sets the PID feedback loss detection level as a percentage of the maximum output frequency.	Default: 0% Min.: 0 Max.: 100	229
b5-14 (01B2)	PID Feedback Loss Detection Time	Fb loss Det Time	All Modes Sets a delay time for PID feedback loss.	Default: 1.0 s Min.: 0.0 Max.: 25.5	230
b5-15 (01B3)	PID Sleep Function Start Level	PID Sleep Level	All Modes Sets the frequency level that triggers the sleep function.	Default: <3> Min.: 0.0 Hz Max.: 400.0 Hz	230
b5-16 (01B4)	PID Sleep Delay Time	PID Sleep Time	All Modes Sets a delay time before the sleep function is triggered.	Default: 0.0 s Min.: 0.0 Max.: 25.5	230
b5-17 (01B5)	PID Accel/Decel Time	PID Acc/Dec Time	All Modes Sets the acceleration and deceleration time to PID setpoint.	Default: 0.0 s Min.: 0.0 Max.: 6000.0	231
b5-18 (01DC)	PID Setpoint Selection	PID Setpoint Sel 0: Disabled 1: Enabled	All Modes 0: Disabled 1: Enabled	Default: 0 Range: 0, 1	231
b5-19 (01DD) RUN	PID Setpoint Value	PID Setpoint	All Modes Sets the PID target value when b5-18 = 1. Set as a percentage of the maximum PID feedback.	Default: 0.00% Min.: 0.00 Max.: 100.00	231
b5-20 (01E2)	PID Setpoint Scaling	PID Disp Scaling 0: 0.01Hz units 1: 0.01% units 2: r/min 3: User Units	All Modes Sets the units for setting/display b5-19. 0: 0.01 Hz units 1: 0.01% units (100% = max PID feedback) 2: r/min (number of motor poles must entered) 3: User-set (set scaling to b5-38 and b5-39)	Default: 1 Range: 0 to 3	231

No. (Addr. Hex)	Name	LCD Display	Description	Values	Page
b5-34 (019F) RUN	PID Output Lower Limit	PID Out Low Lim	All Modes Sets the minimum output possible from the PID controller as a percentage of the maximum output frequency.	Default: 0.00% Min.: -100.00 Max.: 100.00	231
b5-35 (01A0) RUN	PID Input Limit	PID Input Limit	All Modes Limits the PID control input (deviation signal) as a percentage of the maximum output frequency. Acts as a bipolar limit.	Default: 1000.0% Min.: 0.0 Max.: 1000.0	232
b5-36 (01A1)	PID Feedback High Detection Level	Fb High Det Lvl	All Modes Sets the PID feedback high detection level as a percentage of the maximum output frequency.	Default: 100% Min.: 0 Max.: 100	230
b5-37 (01A2)	PID Feedback High Detection Time	Fb High Dly Time	All Modes Sets the PID feedback high level detection delay time.	Default: 1.0 s Min.: 0.0 Max.: 25.5	230
b5-38 (01FE)	PID Setpoint User Display	PID UsrDspMaxVal	All Modes Sets the display value of U5-01 and U5-04 when the maximum frequency is output.	Default: <4> Min.: 1 Max.: 60000	232
b5-39 (01FF)	PID Setpoint Display Digits	PID UsrDspDigits 0: No Dec (XXXXX) 1: 1 Dec (XXXX.X) 2: 2 Dec (XXX.XX) 3: 3 Dec (XX.XXX)	All Modes 0: No decimal places 1: One decimal place 2: Two decimal places 3: Three decimal places	Default: <4> Range: 0 to 3	232
b5-40 (017F)	Frequency Reference Monitor Content during PID	Fref Mon Sel@PID 0: Fref Mon w PID 1: Fref Mon w/o PID	All Modes 0: Display the frequency reference (U1-01) after PID compensation has been added. 1: Display the frequency reference (U1-01) before PID compensation has been added.	Default: 0 Range: 0, 1	232
b5-47 (017D) <5>	Reverse Operation Selection 2 by PID Output	Output Rev Sel2 0: 0 limit 1: Reverse	All Modes Reverse operation selection when b5-01 = 3 or 4. 0: Zero limit when PID output is a negative value. 1: Reverse operation when PID output is a negative value (Zero limit if the reverse operation is prohibited by b1-04).	Default: 1 Range: 0, 1	232

<1> Default setting is determined by parameter o2-04, Drive Model Selection.
<2> Settings 5 to 8 are available in drive software versions PRG: 1019 and later.
<3> Default setting is determined by parameter A1-02, Control Method Selection.
<4> Default setting is determined by parameter b5-20, PID Setpoint Scaling.
<5> Available in drive software versions PRG: 1015 and later.

◆ b6: Dwell Function

No. (Addr. Hex)	Name	LCD Display	Description	Values	Page
b6-01 (01B6)	Dwell Reference at Start	Dwell Ref @Start	All Modes Parameters b6-01 and b6-02 set the frequency to hold and the time to maintain that frequency at start.	Default: 0.0 Hz Min.: 0.0 Max.: 400.0	234
b6-02 (01B7)	Dwell Time at Start	Dwell Time@Start		Default: 0.0 s Min.: 0.0 Max.: 10.0	234
b6-03 (01B8)	Dwell Reference at Stop	Dwell Ref @Stop	All Modes Parameters b6-03 and b6-04 set the frequency to hold and the time to maintain that frequency at stop.	Default: 0.0 Hz Min.: 0.0 Max.: 400.0	234
b6-04 (01B9)	Dwell Time at Stop	Dwell Time @Stop		Default: 0.0 s Min.: 0.0 Max.: 10.0	234

◆ b7: Droop Control

No. (Addr. Hex)	Name	LCD Display	Description	Values	Page
b7-01 (01CA) RUN	Droop Control Gain	DROOP Quantity	V/f, V/f w PG, OLV, **CLV**, OLV/PM, AOLV/PM, **CLV/PM** Sets the speed reduction gain applied at a torque reference of 100%. Set as a percentage of motor base speed.	Default: 0.0% Min.: 0.0 Max.: 100.0	234
b7-02 (01CB) RUN	Droop Control Delay Time	DROOP Delay Time	V/f, V/f w PG, OLV, **CLV**, OLV/PM, AOLV/PM, **CLV/PM** Adjusts the responsiveness of Droop Control.	Default: 0.05 s Min.: 0.03 Max.: 2.00	235
b7-03 (017E) <1>	Droop Control Limit Selection	Droop Limit Sel 0: Disabled 1: Enabled	V/f, V/f w PG, OLV, **CLV**, OLV/PM, AOLV/PM, **CLV/PM** 0: Disabled 1: Enabled	Default: 1 Range: 0, 1	235

<1> Available in drive software versions PRG: 1015 and later.

◆ b8: Energy Saving

No. (Addr. Hex)	Name	LCD Display	Description	Values	Page
b8-01 (01CC)	Energy Saving Control Selection	Energy Save Sel 0: Disabled 1: Enabled	**V/f**, **V/f w PG**, **OLV**, **CLV**, OLV/PM, **AOLV/PM**, **CLV/PM** 0: Disabled 1: Enabled	Default: <1> Range: 0, 1	235
b8-02 (01CD) RUN	Energy Saving Gain	Energy Save Gain	V/f, V/f w PG, **OLV**, **CLV**, OLV/PM, AOLV/PM, CLV/PM Sets the gain used for Energy Saving.	Default: <1> Min.: 0.0 Max.: 10.0	235
b8-03 (01CE) RUN	Energy Saving Control Filter Time Constant	Energy Save F.T	V/f, V/f w PG, **OLV**, **CLV**, OLV/PM, AOLV/PM, CLV/PM Sets a time constant for Energy Saving.	Default: <2> Min.: 0.00 s Max.: 10.00 s	236
b8-04 (01CF)	Energy Saving Coefficient Value	Energy Save COEF	**V/f**, **V/f w PG**, OLV, CLV, OLV/PM, AOLV/PM, CLV/PM Determines the level of maximum motor efficiency. Setting range is 0.0 to 2000.0 for drives 3.7 kW and smaller. The display resolution depends on the rated output current after the Drive Duty has been set in parameter C6-01. *Refer to Model Number and Nameplate Check on page 35*.	Default: <3> <4> Min.: 0.00 Max.: 655.00	236
b8-05 (01D0)	Power Detection Filter Time	kW Filter Time	**V/f**, **V/f w PG**, OLV, CLV, OLV/PM, AOLV/PM, CLV/PM Sets a time constant filter for output power detection.	Default: 20 ms Min.: 0 Max.: 2000	236
b8-06 (01D1)	Search Operation Voltage Limit	Search V Limit	**V/f**, **V/f w PG**, OLV, CLV, OLV/PM, AOLV/PM, CLV/PM Sets the limit for the voltage search operation as a percentage of the motor rated voltage.	Default: 0% Min.: 0 Max.: 100	236
b8-16 (01F8) <5>	Energy Saving Parameter (Ki) for PM Motors	PM Enrgy Save Ki	V/f, V/f w PG, OLV, CLV, OLV/PM, **AOLV/PM**, **CLV/PM** Coefficient to adjust torque linearity. Set to the Ki value on the motor nameplate. When parameter E5-01, Motor Code Selection (for PM Motors), is set to 1□□□ or 2□□□, the automatically calculated value will be set. This set value cannot be changed.	Default: 1.00 Min.: 0.00 Max.: 3.00 <6>	236

No. (Addr. Hex)	Name	LCD Display	Description	Values	Page
b8-17 (01F9) <5>	Energy Saving Parameter (Kt) for PM Motors	PM Enrgy Save Kt	V/f, V/f w PG, OLV, CLV, OLV/PM, **AOLV/PM**, **CLV/PM** Coefficient to adjust torque linearity. Set to the Kt value on the motor nameplate. When parameter E5-01, Motor Code Selection (for PM Motors), is set to 1□□□ or 2□□□, the automatically calculated value will be set. This set value cannot be changed.	Default: 1.00 Min.: 0.00 Max.: 3.00 <6>	236
b8-27 (0B52)	q-Axis Current Compensation Method when Output Voltage is Limited	Iq Comp Method 0: Priority OutVolt 1: Priority Iq	V/f, V/f w PG, OLV, CLV, OLV/PM, **AOLV/PM**, **CLV/PM** Sets a compensation method for the q-Axis current when output voltage is limited. There is normally no need to change this parameter from the default value. 0: Output Voltage Limit Priority 1: q-Axis Current Priority **Note:** This parameter is not available in models 4A0930 and 4A1200.	Default: 0 Range.: 0, 1	237

<1> Default setting is determined by parameter A1-02, Control Method Selection.
<2> Default setting is determined by parameters A1-02, Control Method Selection, and o2-04, Drive Model Selection.
<3> Default setting is determined by parameters o2-04, Drive Model Selection, and C6-01, Drive Duty Selection.
<4> Parameter value changes automatically if E2-11 is manually changed or changed by Auto-Tuning.
<5> Available in drive software versions PRG: 1015 and later.
<6> The maximum value is 2.00 in drive software versions PRG: 1018 and earlier.

◆ b9: Zero Servo

No. (Addr. Hex)	Name	LCD Display	Description	Values	Page
b9-01 (01DA)	Zero Servo Gain	Zero Servo Gain	V/f, V/f w PG, OLV, **CLV**, OLV/PM, AOLV/PM, **CLV/PM** Sets the position loop gain for the Zero Servo function.	Default: 5 Min.: 0 Max.: 100	238
b9-02 (01DB)	Zero Servo Completion Width	Zero Servo Count	V/f, V/f w PG, OLV, **CLV**, OLV/PM, AOLV/PM, **CLV/PM** Sets the range to trigger an output terminal set for “Zero Servo Complete” during Zero Servo operation.	Default: 10 Min.: 0 Max.: 16383	238

B.5 C: Tuning

C parameters are used to adjust the acceleration and deceleration times, S-curves, torque compensation, and carrier frequency selections.

◆ C1: Acceleration and Deceleration Times

No. (Addr. Hex)	Name	LCD Display	Description	Values	Page
C1-01 (0200) RUN	Acceleration Time 1	Accel Time 1	All Modes Sets the time to accelerate from 0 to maximum frequency.	Default: 10.0 s Min.: 0.0 Max.: 6000.0 <1>	239
C1-02 (0201) RUN	Deceleration Time 1	Decel Time 1	All Modes Sets the time to decelerate from maximum frequency to 0.		239
C1-03 (0202) RUN	Acceleration Time 2	Accel Time 2	All Modes Sets the time to accelerate from 0 to maximum frequency.	Default: 10.0 s Min.: 0.0 Max.: 6000.0 <1>	239
C1-04 (0203) RUN	Deceleration Time 2	Decel Time 2	All Modes Sets the time to decelerate from maximum frequency to 0.		239
C1-05 (0204) RUN	Acceleration Time 3 (Motor 2 Accel Time 1)	Accel Time 3	All Modes Sets the time to accelerate from 0 to maximum frequency.	Default: 10.0 s Min.: 0.0 Max.: 6000.0 <1>	239
C1-06 (0205) RUN	Deceleration Time 3 (Motor 2 Decel Time 1)	Decel Time 3	All Modes Sets the time to decelerate from maximum frequency to 0.		239
C1-07 (0206) RUN	Acceleration Time 4 (Motor 2 Accel Time 2)	Accel Time 4	All Modes Sets the time to accelerate from 0 to maximum frequency.	Default: 10.0 s Min.: 0.0 Max.: 6000.0 <1>	239
C1-08 (0207) RUN	Deceleration Time 4 (Motor 2 Decel Time 2)	Decel Time 4	All Modes Sets the time to decelerate from maximum frequency to 0.		239
C1-09 (0208) RUN	Fast Stop Time	Fast Stop Time	All Modes Sets the time for the Fast Stop function.	Default: 10.0 s Min.: 0.0 Max.: 6000.0 <1>	240
C1-10 (0209)	Accel/Decel Time Setting Units	Acc/Dec Units 0: 0.01 Seconds 1: 0.1 Seconds	All Modes 0: 0.01 s (0.00 to 600.00 s) 1: 0.1 s (0.0 to 6000.0 s)	Default: 1 Range: 0, 1	240
C1-11 (020A)	Accel/Decel Time Switching Frequency	Acc/Dec SW Freq	All Modes Sets the frequency to switch between accel/decel time settings	Default: 0.0 Hz Min.: 0.0 Max.: 400.0	241

<1> Setting range value is determined by parameter C1-10, Accel/Decel Time Setting Units. When C1-10 = 0 (units of 0.01 seconds), the setting range becomes 0.00 to 600.00 seconds.

◆ C2: S-Curve Characteristics

No. (Addr. Hex)	Name	LCD Display	Description	Values	Page
C2-01 (020B)	S-Curve Characteristic at Accel Start	SCrv Acc @ Start	**All Modes** The S-curve can be controlled at the four points shown below. 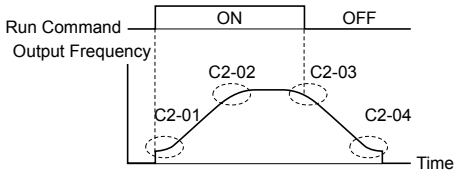 	Default: 0.20 s <1> Min.: 0.00 Max.: 10.00	241
C2-02 (020C)	S-Curve Characteristic at Accel End	SCrv Acc @ End		Default: 0.20 s Min.: 0.00 Max.: 10.00	241
C2-03 (020D)	S-Curve Characteristic at Decel Start	SCrv Dec @ Start		Default: 0.20 s Min.: 0.00 Max.: 10.00	241
C2-04 (020E)	S-Curve Characteristic at Decel End	SCrv Dec @ End		Default: 0.00 s Min.: 0.00 Max.: 10.00	241

<1> Default setting is determined by parameter A1-02, Control Method Selection.

◆ C3: Slip Compensation

No. (Addr. Hex)	Name	LCD Display	Description	Values	Page
C3-01 (020F) RUN	Slip Compensation Gain	Slip Comp Gain	**V/f** V/f w PG **OLV** **CLV** OLV/PM AOLV/PM CLV/PM Sets the gain for the motor slip compensation function used for motor 1.	Default: <1> Min.: 0.0 Max.: 2.5	241
C3-02 (0210) RUN	Slip Compensation Primary Delay Time	Slip Comp Time	**V/f** V/f w PG **OLV** CLV OLV/PM AOLV/PM CLV/PM Adjusts the slip compensation function delay time used for motor 1.	Default: <1> Min.: 0 ms Max.: 10000 ms	242
C3-03 (0211)	Slip Compensation Limit	Slip Comp Limit	**V/f** V/f w PG **OLV** CLV OLV/PM AOLV/PM CLV/PM Sets an upper limit for the slip compensation function as a percentage of motor rated slip for motor 1 (E2-02).	Default: 200% Min.: 0 Max.: 250	242
C3-04 (0212)	Slip Compensation Selection during Regeneration	Slip Comp Regen	**V/f** V/f w PG **OLV** CLV OLV/PM AOLV/PM CLV/PM 0: Disabled. 1: Enabled above 6 Hz. 2: Enabled whenever slip compensation is possible.	Default: 0 Range: 0 to 2	242
C3-05 (0213)	Output Voltage Limit Operation Selection	Output V Lim Sel	V/f V/f w PG **OLV** **CLV** OLV/PM AOLV/PM CLV/PM 0: Disabled. 1: Enabled. Automatically decreases motor flux when output voltage saturation is reached. **Note:** The available control modes for parameter C3-05 vary by drive model: Models 2A0004 to 2A0415, 4A0002 to 4A0675, and 5A0003 to 5A0242: Available when A1-02 = 2, 3. Models 4A0930 and 4A1200: Available when A1-02 = 2, 3, 6, 7.	Default: 0 Range: 0, 1	243
C3-16 (0261)	Output Voltage Limit Operation Start Level (Percentage Modulation)	Output V Lim Sta	V/f V/f w PG **OLV** **CLV** OLV/PM AOLV/PM CLV/PM Sets the output voltage limit operation start level (percentage modulation) when C3-05 is enabled. **Note:** This parameter is only available in models 4A0930 and 4A1200.	Default: 85.0% Min.: 70.0 Max.: 90.0	243

No. (Addr. Hex)	Name	LCD Display	Description	Values	Page
C3-17 (0262)	Maximum Output Voltage Limit Level (Percentage Modulation)	Output V Lim Max	V/f, V/f w PG, **OLV**, **CLV**, OLV/PM, AOLV/PM, CLV/PM Sets the output voltage limit operation determined by C3-18 (percentage modulation) when C3-05 is enabled. **Note:** This parameter is only available in models 4A0930 and 4A1200.	Default: 90.0% Min.: 85.0 Max.: 100.0	243
C3-18 (0263)	Output Voltage Limit Level	Output V Lim lev	V/f, V/f w PG, **OLV**, **CLV**, OLV/PM, AOLV/PM, CLV/PM Sets the maximum percentage of output voltage reduction when C3-05 is enabled. **Note:** This parameter is only available in models 4A0930 and 4A1200.	Default: 90.0% Min.: 30.0 Max.: 100.0	243
C3-21 (033E) RUN	Motor 2 Slip Compensation Gain	SlpCmp Gain Mtr2	**V/f**, V/f w PG, **OLV**, **CLV**, OLV/PM, AOLV/PM, CLV/PM Sets the slip compensation gain used for motor 2.	Default: <2> Min.: 0.0 Max.: 2.5	243
C3-22 (0241) RUN	Motor 2 Slip Compensation Primary Delay Time	Slip Comp Time 2	**V/f**, V/f w PG, **OLV**, CLV, OLV/PM, AOLV/PM, CLV/PM Sets the slip compensation delay time used for motor 2.	Default: <2> Min.: 0 ms Max.: 10000 ms	243
C3-23 (0242)	Motor 2 Slip Compensation Limit	Silp Comp Limit2	**V/f**, V/f w PG, **OLV**, CLV, OLV/PM, AOLV/PM, CLV/PM Sets the upper limit for the slip compensation function for motor 2. Set as a percentage of the motor rated slip (E4-02).	Default: 200% Min.: 0 Max.: 250	244
C3-24 (0243)	Motor 2 Slip Compensation Selection During Regeneration	RegenSlpComp2 0: Disabled 1: Above 6 Hz 2: Lowst possbl spd	**V/f**, V/f w PG, **OLV**, CLV, OLV/PM, AOLV/PM, CLV/PM 0: Disabled. 1: Enabled above 6 Hz. 2: Enabled whenever slip compensation is possible.	Default: 0 Range: 0 to 2	244

<1> Default setting is determined by parameter A1-02, Control Method Selection.

<2> Default setting is determined by parameter E3-01, Motor 2 Control Mode Selection.

◆ C4: Torque Compensation

No. (Addr. Hex)	Name	LCD Display	Description	Values	Page
C4-01 (0215) RUN	Torque Compensation Gain	Torq Comp Gain	**V/f**, **V/f w PG**, **OLV**, CLV, **OLV/PM**, AOLV/PM, CLV/PM Sets the gain for the automatic torque (voltage) boost function and helps to produce better starting torque. Used for motor 1.	Default: <1> Min.: 0.00 Max.: 2.50	244
C4-02 (0216) RUN	Torque Compensation Primary Delay Time 1	Torq Comp Time	**V/f**, **V/f w PG**, **OLV**, CLV, **OLV/PM**, AOLV/PM, CLV/PM Sets the torque compensation filter time.	Default: <2> Min.: 0 ms Max.: 60000 ms	245
C4-03 (0217)	Torque Compensation at Forward Start	F TorqCmp@start	V/f, V/f w PG, **OLV**, CLV, OLV/PM, AOLV/PM, CLV/PM Sets torque compensation at forward start as a percentage of motor torque.	Default: 0.0% Min.: 0.0 Max.: 200.0	245
C4-04 (0218)	Torque Compensation at Reverse Start	R TorqCmp@start	V/f, V/f w PG, **OLV**, CLV, OLV/PM, AOLV/PM, CLV/PM Sets torque compensation at reverse start as a percentage of motor torque.	Default: 0.0% Min.: -200.0 Max.: 0.0	245
C4-05 (0219)	Torque Compensation Time Constant	TorqCmp Delay T	V/f, V/f w PG, **OLV**, CLV, OLV/PM, AOLV/PM, CLV/PM Sets the time constant for torque compensation at forward start and reverse start (C4-03 and C4-04).	Default: 10 ms Min.: 0 Max.: 200	245

No. (Addr. Hex)	Name	LCD Display	Description	Values	Page
C4-06 (021A)	Torque Compensation Primary Delay Time 2	Start Torq Time	V/f, V/f w PG, **OLV**, CLV, OLV/PM, AOLV/PM, CLV/PM Sets the torque compensation time 2.	Default: 150 ms Min.: 0 Max.: 10000	245
C4-07 (0341) RUN	Motor 2 Torque Compensation Gain	TrqCmp Gain Mtr2	**V/f**, **V/f w PG**, **OLV**, CLV, OLV/PM, AOLV/PM, CLV/PM Sets the torque compensation gain used for motor 2.	Default: 1.00 Min.: 0.00 Max.: 2.50	245

<1> Default setting is determined by parameter A1-02, Control Method Selection.

<2> Default setting is determined by parameters A1-02, Control Method Selection, and o2-04, Drive Model Selection.

◆ C5: Automatic Speed Regulator (ASR)

No. (Addr. Hex)	Name	LCD Display	Description	Values	Page
C5-01 (021B) RUN	ASR Proportional Gain 1	ASR P Gain 1	V/f, **V/f w PG**, OLV, **CLV**, OLV/PM, **AOLV/PM**, **CLV/PM** Sets the proportional gain of the speed control loop (ASR).	Default: <1> Min.: 0.00 Max.: 300.00 <2>	248
C5-02 (021C) RUN	ASR Integral Time 1	ASR I Time 1	V/f, **V/f w PG**, OLV, **CLV**, OLV/PM, **AOLV/PM**, **CLV/PM** Sets the integral time of the speed control loop (ASR).	Default: <1> Min.: 0.000 s Max.: 10.000 s	248
C5-03 (021D) RUN	ASR Proportional Gain 2	ASR P Gain 2	V/f, **V/f w PG**, OLV, **CLV**, OLV/PM, **AOLV/PM**, **CLV/PM** Sets the speed control gain 2 of the speed control loop (ASR).	Default: <1> Min.: 0.00 Max.: 300.00 <2>	248
C5-04 (021E) RUN	ASR Integral Time 2	ASR I Time 2	V/f, **V/f w PG**, OLV, **CLV**, OLV/PM, **AOLV/PM**, **CLV/PM** Sets the integral time 2 of the speed control loop (ASR).	Default: <1> Min.: 0.000 s Max.: 10.000 s	248
C5-05 (021F)	ASR Limit	ASR Limit	V/f, **V/f w PG**, OLV, CLV, OLV/PM, AOLV/PM, CLV/PM Sets the upper limit for the speed control loop (ASR) as a percentage of the maximum output frequency (E1-04).	Default: 5.0% Min.: 0.0 Max.: 20.0	249
C5-06 (0220)	ASR Primary Delay Time Constant	ASR Delay Time	V/f, V/f w PG, OLV, **CLV**, OLV/PM, **AOLV/PM**, **CLV/PM** Sets the filter time constant for the time from the speed loop to the torque command output.	Default: <1> Min.: 0.000 s Max.: 0.500 s	249
C5-07 (0221)	ASR Gain Switching Frequency	ASR Gain Switch	V/f, V/f w PG, OLV, **CLV**, OLV/PM, **AOLV/PM**, **CLV/PM** Sets the frequency for switching between proportional gain 1, 2 and integral time 1, 2.	Default: 0.0 Hz Min.: 0.0 Max.: 400.0	249
C5-08 (0222)	ASR Integral Limit	ASR I Limit	V/f, V/f w PG, OLV, **CLV**, OLV/PM, **AOLV/PM**, **CLV/PM** Sets the ASR integral upper limit as a percentage of rated load torque.	Default: 400% Min.: 0 Max.: 400	249
C5-12 (0386)	Integral Operation during Accel/Decel	Acc/Dec I Sel	V/f, **V/f w PG**, OLV, CLV, OLV/PM, AOLV/PM, CLV/PM 0: Disabled. Integral functions are enabled only during constant speed. 1: Enabled. Integral functions are always enabled, during accel/decel and during constant speed.	Default: 0 Range: 0, 1	249
C5-17 (0276)	Motor Inertia	Motor Inertia	V/f, V/f w PG, OLV, **CLV**, OLV/PM, AOLV/PM, **CLV/PM** Sets the motor inertia. This value is automatically set during ASR or Inertia Auto-Tuning.	Default: <3> <4> Min.: 0.0001 kgm^2 Max.: 600.00 kgm^2	249

No. (Addr. Hex)	Name	LCD Display	Description	Values	Page
C5-18 (0277)	Load Inertia Ratio	Load Inertia	V/f, V/f w PG, OLV, **CLV**, OLV/PM, AOLV/PM, **CLV/PM** Sets the ratio between the motor and load inertia. This value is automatically set during ASR or Inertia Auto-Tuning.	Default: 1.0 Min.: 0.0 Max.: 6000.0	249
C5-21 (0356) RUN	Motor 2 ASR Proportional Gain 1	ASR P Gain1 Mtr2	V/f, **V/f w PG**, OLV, **CLV**, OLV/PM, AOLV/PM, CLV/PM Sets the proportional gain of the speed control loop (ASR) for motor 2.	Default: <5> Min.: 0.00 Max.: 300.00 <2>	250
C5-22 (0357) RUN	Motor 2 ASR Integral Time 1	ASR I Time1 Mtr2	V/f, **V/f w PG**, OLV, **CLV**, OLV/PM, AOLV/PM, CLV/PM Sets the integral time of the speed control loop (ASR) for motor 2.	Default: <5> Min.: 0.000 s Max.: 10.000 s	250
C5-23 (0358) RUN	Motor 2 ASR Proportional Gain 2	ASR P Gain2 Mtr2	V/f, **V/f w PG**, OLV, **CLV**, OLV/PM, AOLV/PM, CLV/PM Sets the speed control gain 2 of the speed control loop (ASR) for motor 2.	Default: <5> Min.: 0.00 Max.: 300.00 <2>	250
C5-24 (0359) RUN	Motor 2 ASR Integral Time 2	ASR I Time2 Mtr2	V/f, **V/f w PG**, OLV, **CLV**, OLV/PM, AOLV/PM, CLV/PM Sets the integral time 2 of the speed control loop (ASR) for motor 2.	Default: <5> Min.: 0.000 s Max.: 10.000 s	250
C5-25 (035A)	Motor 2 ASR Limit	ASR Limit Mtr2	V/f, **V/f w PG**, OLV, CLV, OLV/PM, AOLV/PM, CLV/PM Sets the upper limit for the speed control loop (ASR) for motor 2 as a percentage of the maximum output frequency (E3-04).	Default: 5.0% Min.: 0.0 Max.: 20.0	250
C5-26 (035B)	Motor 2 ASR Primary Delay Time Constant	ASR Dly Time 2	V/f, V/f w PG, OLV, **CLV**, OLV/PM, AOLV/PM, CLV/PM Sets the filter time constant for the time from the speed loop to the torque command output used for motor 2.	Default: <5> Min.: 0.000 s Max.: 0.500 s	250
C5-27 (035C)	Motor 2 ASR Gain Switching Frequency	ASRGainSwitch2	V/f, V/f w PG, OLV, **CLV**, OLV/PM, **AOLV/PM**, **CLV/PM** Sets the frequency for motor 2 used to switch between proportional gain 1 and 2, and between the integral time 1 and 2.	Default: 0.0 Hz Min.: 0.0 Max.: 400.0	250
C5-28 (035D)	Motor 2 ASR Integral Limit	ASR I limit 2	V/f, V/f w PG, OLV, **CLV**, OLV/PM, AOLV/PM, CLV/PM Sets the ASR integral upper limit for motor 2 as a percentage of rated load torque.	Default: 400% Min.: 0 Max.: 400	250
C5-32 (0361)	Integral Operation during Accel/Decel for Motor 2	Acc/Dec I Sel 2 0: Disabled 1: Enabled	V/f, **V/f w PG**, OLV, CLV, OLV/PM, AOLV/PM, CLV/PM 0: Disabled. Integral functions for motor 2 are enabled only during constant speed. 1: Enabled. Integral functions are always enabled for motor 2, during accel/decel and during constant speed.	Default: 0 Range: 0, 1	250
C5-37 (0278)	Motor 2 Inertia	Motor Inertia 2	V/f, V/f w PG, OLV, **CLV**, OLV/PM, AOLV/PM, CLV/PM Sets the inertia of motor 2 alone without the load. This value is automatically set during ASR or Inertia Auto-Tuning.	Default: <3> <4> Min.: 0.0001 kgm^2 Max.: 600.00 kgm^2	251
C5-38 (0279)	Motor 2 Load Inertia Ratio	Load Inertia 2	V/f, V/f w PG, OLV, **CLV**, OLV/PM, AOLV/PM, CLV/PM Sets the ratio between the motor 2 and machine inertia. This value is automatically set during ASR or Inertia Auto-Tuning.	Default: 1.0 Min.: 0.0 Max.: 6000.0	251

No. (Addr. Hex)	Name	LCD Display	Description	Values	Page
C5-39 (030D)	ASR Primary Delay Time Constant 2	ASR Delay Time 2	V/f, V/f w PG, OLV, CLV, OLV/PM, **AOLV/PM**, **CLV/PM** Sets the filter time constant in seconds for the time from the speed loop to the torque reference output when the Power KEB Ride-Thru is enabled (L2-29 = 1). **Note:** This parameter is not available in models 4A0930 and 4A1200.	Default: 0.000 s Min.: 0.000 Max.: 0.500	*251*

<1> Default setting is determined by parameter A1-02, Control Method Selection.
<2> The setting range is 1.00 to 300.00 in CLV and AOLV/PM control modes.
<3> Default setting is dependent on parameter E5-01, Motor Code Selection.
<4> Default setting is dependent on parameters C6-01, Drive Duty Selection, and o2-04, Drive Model Selection.
<5> Default setting is determined by parameter E3-01, Motor 2 Control Mode Selection.

◆ C6: Carrier Frequency

No. (Addr. Hex)	Name	LCD Display	Description	Values	Page
C6-01 (0223)	Drive Duty Selection	Heavy/NormalDuty 0: Heavy Duty 1: Normal Duty	**All Modes** 0: Heavy Duty (HD) Overload capability: 150% of drive rated Heavy Duty current for 60 s Default Carrier Frequency: 2 kHz 1: Normal Duty (ND) Overload capability: 120% of drive rated Normal Duty current for 60 s Default Carrier Frequency: 2 kHz Swing PWM	Default: 1 Range: 0, 1	*251*
C6-02 (0224)	Carrier Frequency Selection	CarrierFreq Sel 1: Fc=2.0 kHz 2: Fc=5.0 kHz 3: Fc=8.0 kHz 4: Fc=10.0 kHz 5: Fc=12.5 kHz 6: Fc=15.0 kHz 7: Swing PWM1 8: Swing PWM2 9: Swing PWM3 A: Swing PWM4 F: Program	**All Modes** 1: 2.0 kHz 2: 5.0 kHz (4.0 kHz) 3: 8.0 kHz (6.0 kHz) 4: 10.0 kHz (8.0 kHz) 5: 12.5 kHz (10.0 kHz) 6: 15.0 kHz (12.0 kHz) 7: Swing PWM1 (Audible sound 1) 8: Swing PWM2 (Audible sound 2) 9: Swing PWM3 (Audible sound 3) A: Swing PWM4 (Audible sound 4) B to E: No setting possible F: User-defined (determined by C6-03 through C6-05) **Note:** 1. The available settings are 1, 2, and F for models 4A0930 and 4A1200. 2. The value in parenthesis indicates the carrier frequency for AOLV/PM.	Default: <1> Range: 1 to 9; A, F	*253*

No. (Addr. Hex)	Name	LCD Display	Description	Values	Page
C6-03 (0225)	Carrier Frequency Upper Limit	CarrierFreq Max	All Modes **Note:** C6-04 and C6-05 are available only in V/f and V/f w/PG control modes. Determines the upper and lower limits for the carrier frequency. In OLV, C6-03 determines the upper limit of the carrier frequency. 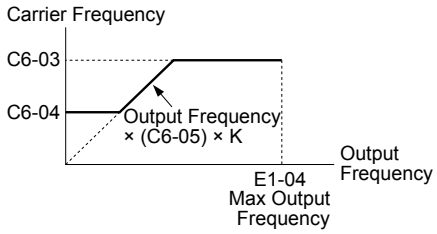 **Note:** The setting range is 1.0 to 5.0 kHz for models 4A0515 to 4A1200.	Default: <2> Min.: 1.0 kHz Max.: 15.0 kHz	*253*
C6-04 (0226)	Carrier Frequency Lower Limit	CarrierFreq Min		Default: <2> Min.: 1.0 kHz Max.: 15.0 kHz	*253*
C6-05 (0227)	Carrier Frequency Proportional Gain	CarrierFreq Gain		Default: <2> Min.: 0 Max.: 99	*253*
C6-09 (022B)	Carrier Frequency during Rotational Auto-Tuning	Carrier in tune 0: Fc = 5kHz 1: Fc = C6-03	V/f V/f w PG OLV CLV OLV/PM AOLV/PM CLV/PM 0: Carrier Frequency = 5 kHz. In PM control modes, this value is 2 kHz. 1: Setting value for C6-03. In PM control modes, this value is the carrier frequency set in C6-02. **Note:** This parameter is not available in models 4A0930 and 4A1200.	Default: 0 Range: 0, 1	*254*

<1> Default setting value is determined by parameters A1-02, Control Method Selection, C6-01, Drive Duty Selection, and o2-04, Drive Model Selection.

<2> Default setting value is determined by parameter C6-02, Carrier Frequency Selection.

B.6 d: References

Reference parameters set the various frequency reference values during operation.

◆ d1: Frequency Reference

No. (Addr. Hex)	Name	LCD Display	Description	Values	Page
d1-01 (0280) RUN	Frequency Reference 1	Reference 1	**All Modes** Sets the frequency reference for the drive. Setting units are determined by parameter o1-03. **Note:** The value set to o1-03 is changed to 1 and the unit is changed to percentage automatically when A1-02 is set to 6 or 7.	Default: 0.00 Hz Min.: 0.00 Max.: 400.00 <1> <2>	255
d1-02 (0281) RUN	Frequency Reference 2	Reference 2	**All Modes** Sets the frequency reference for the drive. Setting units are determined by parameter o1-03. **Note:** The value set to o1-03 is changed to 1 and the unit is changed to percentage automatically when A1-02 is set to 6 or 7.	Default: 0.00 Hz Min.: 0.00 Max.: 400.00 <1> <2>	255
d1-03 (0282) RUN	Frequency Reference 3	Reference 3	**All Modes** Sets the frequency reference for the drive. Setting units are determined by parameter o1-03. **Note:** The value set to o1-03 is changed to 1 and the unit is changed to percentage automatically when A1-02 is set to 6 or 7.	Default: 0.00 Hz Min.: 0.00 Max.: 400.00 <1> <2>	255
d1-04 (0283) RUN	Frequency Reference 4	Reference 4	**All Modes** Sets the frequency reference for the drive. Setting units are determined by parameter o1-03. **Note:** The value set to o1-03 is changed to 1 and the unit is changed to percentage automatically when A1-02 is set to 6 or 7.	Default: 0.00 Hz Min.: 0.00 Max.: 400.00 <1> <2>	255
d1-05 (0284) RUN	Frequency Reference 5	Reference 5	**All Modes** Sets the frequency reference for the drive. Setting units are determined by parameter o1-03. **Note:** The value set to o1-03 is changed to 1 and the unit is changed to percentage automatically when A1-02 is set to 6 or 7.	Default: 0.00 Hz Min.: 0.00 Max.: 400.00 <1> <2>	255
d1-06 (0285) RUN	Frequency Reference 6	Reference 6	**All Modes** Sets the frequency reference for the drive. Setting units are determined by parameter o1-03. **Note:** The value set to o1-03 is changed to 1 and the unit is changed to percentage automatically when A1-02 is set to 6 or 7.	Default: 0.00 Hz Min.: 0.00 Max.: 400.00 <1> <2>	255
d1-07 (0286) RUN	Frequency Reference 7	Reference 7	**All Modes** Sets the frequency reference for the drive. Setting units are determined by parameter o1-03. **Note:** The value set to o1-03 is changed to 1 and the unit is changed to percentage automatically when A1-02 is set to 6 or 7.	Default: 0.00 Hz Min.: 0.00 Max.: 400.00 <1> <2>	255
d1-08 (0287) RUN	Frequency Reference 8	Reference 8	**All Modes** Sets the frequency reference for the drive. Setting units are determined by parameter o1-03. **Note:** The value set to o1-03 is changed to 1 and the unit is changed to percentage automatically when A1-02 is set to 6 or 7.	Default: 0.00 Hz Min.: 0.00 Max.: 400.00 <1> <2>	255

No. (Addr. Hex)	Name	LCD Display	Description	Values	Page
d1-09 (0288) RUN	Frequency Reference 9	Reference 9	All Modes Sets the frequency reference for the drive. Setting units are determined by parameter o1-03. **Note:** The value set to o1-03 is changed to 1 and the unit is changed to percentage automatically when A1-02 is set to 6 or 7.	Default: 0.00 Hz Min.: 0.00 Max.: 400.00 <1> <2>	255
d1-10 (028B) RUN	Frequency Reference 10	Reference 10	All Modes Sets the frequency reference for the drive. Setting units are determined by parameter o1-03. **Note:** The value set to o1-03 is changed to 1 and the unit is changed to percentage automatically when A1-02 is set to 6 or 7.	Default: 0.00 Hz Min.: 0.00 Max.: 400.00 <1> <2>	255
d1-11 (028C) RUN	Frequency Reference 11	Reference 11	All Modes Sets the frequency reference for the drive. Setting units are determined by parameter o1-03. **Note:** The value set to o1-03 is changed to 1 and the unit is changed to percentage automatically when A1-02 is set to 6 or 7.	Default: 0.00 Hz Min.: 0.00 Max.: 400.00 <1> <2>	255
d1-12 (028D) RUN	Frequency Reference 12	Reference 12	All Modes Sets the frequency reference for the drive. Setting units are determined by parameter o1-03. **Note:** The value set to o1-03 is changed to 1 and the unit is changed to percentage automatically when A1-02 is set to 6 or 7.	Default: 0.00 Hz Min.: 0.00 Max.: 400.00 <1> <2>	255
d1-13 (028E) RUN	Frequency Reference 13	Reference 13	All Modes Sets the frequency reference for the drive. Setting units are determined by parameter o1-03. **Note:** The value set to o1-03 is changed to 1 and the unit is changed to percentage automatically when A1-02 is set to 6 or 7.	Default: 0.00 Hz Min.: 0.00 Max.: 400.00 <1> <2>	255
d1-14 (028F) RUN	Frequency Reference 14	Reference 14	All Modes Sets the frequency reference for the drive. Setting units are determined by parameter o1-03. **Note:** The value set to o1-03 is changed to 1 and the unit is changed to percentage automatically when A1-02 is set to 6 or 7.	Default: 0.00 Hz Min.: 0.00 Max.: 400.00 <1> <2>	255
d1-15 (0290) RUN	Frequency Reference 15	Reference 15	All Modes Sets the frequency reference for the drive. Setting units are determined by parameter o1-03. **Note:** The value set to o1-03 is changed to 1 and the unit is changed to percentage automatically when A1-02 is set to 6 or 7.	Default: 0.00 Hz Min.: 0.00 Max.: 400.00 <1> <2>	255
d1-16 (0291) RUN	Frequency Reference 16	Reference 16	All Modes Sets the frequency reference for the drive. Setting units are determined by parameter o1-03. **Note:** The value set to o1-03 is changed to 1 and the unit is changed to percentage automatically when A1-02 is set to 6 or 7.	Default: 0.00 Hz Min.: 0.00 Max.: 400.00 <1> <2>	255
d1-17 (0292) RUN	Jog Frequency Reference	Jog Reference	All Modes Sets the Jog frequency reference. Setting units are determined by parameter o1-03. **Note:** Setting A1-02 to 6 or 7 will automatically change o1-03 to 1 and unit to %.	Default: 6.00 Hz Min.: 0.00 Max.: 400.00 <1> <2>	255

<1> Range upper limit is determined by parameters d2-01, Frequency Reference Upper Limit, and E1-04, Maximum Output Frequency.

<2> The value of o1-03 is changed to 1 and the unit is also changed to a percentage (%) when the control mode is set to CLV/PM or AOLV/PM.

◆ d2: Frequency Upper/Lower Limits

No. (Addr. Hex.)	Name	LCD Display	Description	Setting	Page
d2-01 (0289)	Frequency Reference Upper Limit	Ref Upper Limit	All Modes Sets the frequency reference upper limit as a percentage of the maximum output frequency.	Default: 100.0% Min.: 0.0 Max.: 110.0	257
d2-02 (028A)	Frequency Reference Lower Limit	Ref Lower Limit	All Modes Sets the frequency reference lower limit as a percentage of the maximum output frequency.	Default: 0.0% Min.: 0.0 Max.: 110.0	257
d2-03 (0293)	Master Speed Reference Lower Limit	Ref1 Lower Limit	All Modes Sets the lower limit for frequency references from analog inputs as a percentage of the maximum output frequency.	Default: 0.0% Min.: 0.0 Max.: 110.0	258

◆ d3: Jump Frequency

No. (Addr. Hex)	Name	LCD Display	Description	Values	Page
d3-01 (0294)	Jump Frequency 1	Jump Freq 1	All Modes Eliminates problems with resonant vibration of the motor/machine by avoiding continuous operation in predefined frequency ranges. The drive accelerates and decelerates the motor through the prohibited frequency ranges. Setting 0.0 disables this function. Parameters must be set so that d3-01 ≥ d3-02 ≥ d3-03.	Default: <1> <2> Min.: 0.0 <2> Max.: 400.0 <2>	258
d3-02 (0295)	Jump Frequency 2	Jump Freq 2	All Modes Eliminates problems with resonant vibration of the motor/machine by avoiding continuous operation in predefined frequency ranges. The drive accelerates and decelerates the motor through the prohibited frequency ranges. Setting 0.0 disables this function. Parameters must be set so that d3-01 ≥ d3-02 ≥ d3-03.	Default: <1> <2> Min.: 0.0 <2> Max.: 400.0 <2>	258
d3-03 (0296)	Jump Frequency 3	Jump Freq 3	All Modes Eliminates problems with resonant vibration of the motor/machine by avoiding continuous operation in predefined frequency ranges. The drive accelerates and decelerates the motor through the prohibited frequency ranges. Setting 0.0 disables this function. Parameters must be set so that d3-01 ≥ d3-02 ≥ d3-03.	Default: <1> <2> Min.: 0.0 <2> Max.: 400.0 <2>	258
d3-04 (0297)	Jump Frequency Width	Jump Bandwidth	All Modes Sets the dead-band width around each selected prohibited frequency reference point.	Default: <1> <3> Min.: 0.0 <3> Max.: 20.0 <3>	258

<1> Default setting is determined by parameter A1-02, Control Mode Setting.

<2> Default setting is 0.0% and setting range is 0.0 to 100.0% in AOLV/PM or CLV/PM.

<3> Default setting is 1.0% and setting range is 0.0 to 40.0% in AOLV/PM and CLV/PM.

◆ d4: Frequency Reference Hold and Up/Down 2 Function

No. (Addr. Hex)	Name	LCD Display	Description	Values	Page
d4-01 (0298)	Frequency Reference Hold Function Selection	Fref Hold Sel 0: Disabled 1: Enabled	All Modes 0: Disabled. Drive starts from zero when the power is switched on. 1: Enabled. At power up, the drive starts the motor at the Hold frequency that was saved.	Default: 0 Range: 0, 1	259
d4-03 (02AA) RUN	Frequency Reference Bias Step (Up/Down 2)	Up/Dn 2 Step Lvl	All Modes Sets the bias added to the frequency reference when the Up 2 and Down 2 digital inputs are enabled (H1-□□ = 75, 76).	Default: 0.00 Hz Min.: 0.00 Max.: 99.99	261

No. (Addr. Hex)	Name	LCD Display	Description	Values	Page
d4-04 (02AB) RUN	Frequency Reference Bias Accel/Decel (Up/Down 2)	Up/Dn 2 Ramp Sel 0: Sel Acc/Dec Time 1: Acc/Dec Time 4	All Modes 0: Use selected accel/decel time. 1: Use accel/decel time 4 (C1-07 and C1-08).	Default: 0 Range: 0, 1	262
d4-05 (02AC) RUN	Frequency Reference Bias Operation Mode Selection (Up/Down 2)	Up/Dn 2 Bias Sel 0: Hold Bias Value 1: Reset Bias Value	All Modes 0: Bias value is held if no input Up 2 or Down 2 is active. 1: When the Up 2 reference and Down 2 reference are both on or both off, the applied bias becomes 0. The specified accel/decel times are used for acceleration or deceleration.	Default: 0 Range: 0, 1	262
d4-06 (02AD)	Frequency Reference Bias (Up/Down 2)	Up/Dn 2 Bias Lvl	All Modes The Up/Down 2 bias value is saved in d4-06 when the frequency reference is not input by the digital operator. Set as a percentage of the maximum output frequency.	Default: 0.0% Min.: -99.9 Max.: 100.0	262
d4-07 (02AE) RUN	Analog Frequency Reference Fluctuation Limit (Up/Down 2)	Up/Dn 2 FluctLim	All Modes Limits how much the frequency reference is allowed to change while an input terminal set for Up 2 or Down 2 is enabled. If the frequency reference changes for more than the set value, then the bias value is held and the drive accelerates or decelerates to the frequency reference. Set as a percentage of the maximum output frequency.	Default: 1.0% Min.: 0.1 Max.: 100.0	263
d4-08 (02AF) RUN	Frequency Reference Bias Upper Limit (Up/Down 2)	Up/Dn 2 UpperLim	All Modes Sets the upper limit for the bias and the value that can be saved in d4-06. Set as a percentage of the maximum output frequency.	Default: 100.0% Min.: 0.0 Max.: 100.0	263
d4-09 (02B0) RUN	Frequency Reference Bias Lower Limit (Up/Down 2)	Up/Dn 2 LowerLim	All Modes Sets the lower limit for the bias and the value that can be saved in d4-06. Set as a percentage of the maximum output frequency.	Default: 0.0% Min.: -99.9 Max.: 0.0	263
d4-10 (02B6)	Up/Down Frequency Reference Limit Selection	Up/Dn LowLim Sel 0: D2-02 or Analog 1: D2-02 Only	All Modes 0: The lower limit is determined by d2-02 or an analog input. 1: The lower limit is determined by d2-02.	Default: 0 Range: 0, 1	263

◆ d5: Torque Control

No. (Addr. Hex)	Name	LCD Display	Description	Values	Page
d5-01 (029A)	Torque Control Selection	Torq Control Sel 0: Speed Control 1: Torque Control	V/f, V/f w PG, OLV, **CLV**, OLV/PM, AOLV/PM, **CLV/PM** 0: Speed Control 1: Torque Control Set to 0 when using a digital input to switch between Speed and Torque Control (H1-□□ = 71).	Default: 0 Range: 0, 1	267
d5-02 (029B)	Torque Reference Delay Time	Tq Ref Dly Time	V/f, V/f w PG, OLV, **CLV**, OLV/PM, AOLV/PM, **CLV/PM** Sets a delay time for the torque reference signal. Used to suppress effects by noisy or fluctuating torque reference signals.	Default: 0 ms Min.: 0 Max.: 1000	267
d5-03 (029C)	Speed Limit Selection	Speed Limit Sel 1: Fref Limit 2: Speed Limit Sel	V/f, V/f w PG, OLV, **CLV**, OLV/PM, AOLV/PM, **CLV/PM** 1: Limit set by the frequency reference in b1-01. 2: Limit set by d5-04.	Default: 1 Range: 1, 2	267
d5-04 (029D)	Speed Limit	Speed Limit Val	V/f, V/f w PG, OLV, **CLV**, OLV/PM, AOLV/PM, **CLV/PM** Sets the speed limit during Torque Control as a percentage of the maximum output frequency. Enabled when d5-03 = 2. A negative setting sets a limit in the opposite direction of the Run command.	Default: 0% Min.: -120 Max.: 120	268

No. (Addr. Hex)	Name	LCD Display	Description	Values	Page
d5-05 (029E)	Speed Limit Bias	Speed Limit Bias	V/f, V/f w PG, OLV, **CLV**, OLV/PM, AOLV/PM, **CLV/PM** Sets the speed limit bias as a percentage of the maximum output frequency. The bias is applied to the specified speed limit and can adjust the margin for the speed limit.	Default: 10% Min.: 0 Max.: 120	268
d5-06 (029F)	Speed/Torque Control Switchover Time	Spd/Trq Sw Timer	V/f, V/f w PG, OLV, **CLV**, OLV/PM, AOLV/PM, **CLV/PM** Sets the delay time for switching between Speed and Torque Control using an input terminal (H1-□□ = 71). Reference values are held during this switch delay time.	Default: 0 ms Min.: 0 Max.: 1000	268
d5-08 (02B5)	Unidirectional Speed Limit Bias	UnidirSpdLimBias 0: Disabled 1: Enabled	V/f, V/f w PG, OLV, **CLV**, OLV/PM, AOLV/PM, **CLV/PM** 0: Disabled 1: Enabled	Default: 1 Range: 0, 1	268

◆ d6: Field Weakening and Field Forcing

No. (Addr Hex.)	Name	LCD Display	Description	Values	Page
d6-01 (02A0)	Field Weakening Level	Field-Weak Lvl	**V/f**, **V/f w PG**, OLV, CLV, OLV/PM, AOLV/PM, CLV/PM Sets the drive output voltage for the Field Weakening function as a percentage of the maximum output voltage. Enabled when a multi-function input is set for Field Weakening (H1-□□ = 63).	Default: 80% Min.: 0 Max.: 100	268
d6-02 (02A1)	Field Weakening Frequency Limit	Fiel-Weak Freq	**V/f**, **V/f w PG**, OLV, CLV, OLV/PM, AOLV/PM, CLV/PM Sets the lower limit of the frequency range where Field Weakening control is valid. The Field Weakening command is valid only at frequencies above this setting and only when the output frequency matches the frequency reference (speed agree).	Default: 0.0 Hz Min.: 0.0 Max.: 400.0	268
d6-03 (02A2)	Field Forcing Selection	Field Force Sel 0: Disabled 1: Enabled	V/f, V/f w PG, **OLV**, **CLV**, OLV/PM, AOLV/PM, CLV/PM 0: Disabled 1: Enabled	Default: 0 Range: 0, 1	269
d6-06 (02A5)	Field Forcing Limit	FieldForce Limit	V/f, V/f w PG, **OLV**, **CLV**, OLV/PM, AOLV/PM, CLV/PM Sets the upper limit of the excitation current command during magnetic field forcing. A setting of 100% is equal to motor no-load current. Disabled only during DC Injection Braking.	Default: 400% Min.: 100 Max.: 400	269

◆ d7: Offset Frequency

No. (Addr. Hex)	Name	LCD Display	Description	Setting	Page
d7-01 (02B2) RUN	Offset Frequency 1	Offset Freq 1	**All Modes** Added to the frequency reference when the digital input "Frequency offset 1" (H1-□□ = 44) is switched on. A setting of 100% is equal to the drive maximum output current.	Default: 0.0% Min.: -100.0 Max.: 100.0	269
d7-02 (02B3) RUN	Offset Frequency 2	Offset Freq 2	**All Modes** Added to the frequency reference when the digital input "Frequency offset 2" (H1-□□ = 45) is switched on. A setting of 100% is equal to the drive maximum output current.	Default: 0.0% Min.: -100.0 Max.: 100.0	269

No. (Addr. Hex)	Name	LCD Display	Description	Setting	Page
d7-03 (02B4) RUN	Offset Frequency 3	Offset Freq 3	All Modes Added to the frequency reference when the digital input "Frequency offset 3" (H1-□□ = 46) is switched on. A setting of 100% is equal to the drive maximum output current.	Default: 0.0% Min.: -100.0 Max.: 100.0	269

B.7 E: Motor Parameters

◆ E1: V/f Pattern for Motor 1

No. (Addr. Hex)	Name	LCD Display	Description	Values	Page
E1-01 (0300)	Input Voltage Setting	Input Voltage	All Modes This parameter must be set to the power supply voltage. **WARNING!** *Electrical Shock Hazard. Drive input voltage (not motor voltage) must be set in E1-01 for the protective features of the drive to function properly. Failure to do so may result in equipment damage and/or death or personal injury.*	Default: 230 V <1> Min.: 155 Max.: 255 <1>	270
E1-03 (0302)	V/f Pattern Selection	V/F Selection 0: 50 Hz 1: 60 Hz Saturation 2: 50 Hz Saturation 3: 72 Hz 4: 50 Hz VT1 5: 50 Hz VT2 6: 60 Hz VT1 7: 60 Hz VT2 8: 50 Hz HST1 9: 50 Hz HST2 A: 60 Hz HST1 B: 60 Hz HST2 C: 90 Hz D: 120 Hz E: 180 Hz F: Custom V/F	V/f V/f w PG OLV CLV OLV/PM AOLV/PM CLV/PM 0: 50 Hz, Constant torque 1 1: 60 Hz, Constant torque 2 2: 60 Hz, Constant torque 3 (50 Hz base) 3: 72 Hz, Constant torque 4 (60 Hz base) 4: 50 Hz, Variable torque 1 5: 50 Hz, Variable torque 2 6: 60 Hz, Variable torque 1 7: 60 Hz, Variable torque 2 8: 50 Hz, High starting torque 1 9: 50 Hz, High starting torque 2 A: 60 Hz, High starting torque 3 B: 60 Hz, High starting torque 4 C: 90 Hz (60 Hz base) D: 120 Hz (60 Hz base) E: 180 Hz (60 Hz base) F: Custom V/f, E1-04 through E1-13 settings define the V/f pattern **Note:** Setting F is only available in vector control modes.	Default: F <2> Range: 0 to 9; A to F	270

No. (Addr. Hex)	Name	LCD Display	Description	Values	Page
E1-04 (0303)	Maximum Output Frequency	Max Frequency	**All Modes** Parameters E1-04 and E1-06 to E1-13 can only be changed when E1-03 is set to F. To set linear V/f characteristics, set the same values for E1-07 and E1-09. In this case, the setting for E1-08 will be disregarded. Ensure that the five frequencies are set according to the following rules to prevent triggering an oPE10 fault: E1-09 ≤ E1-07 < E1-06 ≤ E1-11 ≤ E1-04 Setting E1-11 to 0 disables both E1-11 and E1-12 and the above conditions do not apply. 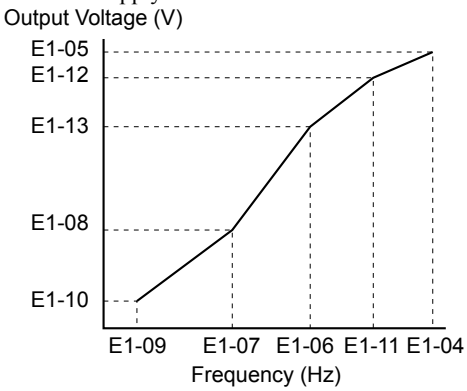 **Note:** Some parameters may not be available depending on the control mode. • E1-07, E1-08, and E1-10 are available only in the following control modes: V/f Control, V/f with PG, Open Loop Vector. • E1-11, E1-12, and E1-13 are available only in the following control modes: V/f Control, V/f with PG, Open Loop Vector, Closed Loop Vector.	Default: <3> <4> Min.: 40.0 Max.: 400.0 <5>	273
E1-05 (0304)	Maximum Voltage	Max Voltage		Default: <3> <4> Min.: 0.0 V Max.: 255.0 V <1>	273
E1-06 (0305)	Base Frequency	Base Frequency		Default: <3> <4> Min.: 0.0 Max.: E1-04 <5>	273
E1-07 (0306)	Middle Output Frequency	Mid Frequency A		Default: <3> Min.: 0.0 Max.: E1-04	273
E1-08 (0307)	Middle Output Frequency Voltage	Mid Voltage A		Default: <3> Min.: 0.0 V Max.: 255.0 V <1>	273
E1-09 (0308)	Minimum Output Frequency	Min Frequency		Default: <3> <4> Min.: 0.0 Max.: E1-04 <5>	273
E1-10 (0309)	Minimum Output Frequency Voltage	Min Voltage		Default: <3> Min.: 0.0 V Max.: 255.0 V <1>	273
E1-11 (030A) <7>	Middle Output Frequency 2	Mid Frequency B		Default: 0.0 Hz Min.: 0.0 Max.: E1-04	273
E1-12 (030B) <7>	Middle Output Frequency Voltage 2	Mid Voltage B		Default: 0.0 V Min.: 0.0 Max.: 255.0 V <1>	273
E1-13 (030C) <6>	Base Voltage	Base Voltage		Default: 0.0 V <6> Min.: 0.0 Max.: 255.0 V <1>	273

<1> Values shown are specific to 200 V class drives. Double the value for 400 V class drives. Multiply the value by 2.875 for 600 V class drives.

<2> Parameter setting value is not reset to the default value when the drive is initialized.

<3> Default setting is determined by parameters A1-02, Control Method Selection, C6-01, Drive Duty Selection, and o2-04, Drive Model Selection.

<4> Default setting is determined by parameter E5-01, Motor Code Selection.

<5> In OLV/PM, setting range varies according to the motor code entered to E5-01. The setting range is 0.0 to 400.0 Hz when E5-01 is set to FFFF.

<6> When E1-13, Base Voltage, is set to 0.0, output voltage is controlled with E1-05, Maximum Voltage, = E1-13. When Auto-Tuning is performed, E1-05 and E1-13 are automatically set to the same value.

<7> Parameter ignored when E1-11 (Motor 1 Mid Output Frequency 2) and E1-12 (Motor 1 Mid Output Frequency Voltage 2) are set to 0.0.

◆ E2: Motor 1 Parameters

No. (Addr. Hex)	Name	LCD Display	Description	Values	Page
E2-01 (030E)	Motor Rated Current	Motor Rated FLA	**V/f** **V/f w PG** **OLV** **CLV** OLV/PM AOLV/PM CLV/PM Sets the motor nameplate full load current in amps. Automatically set during Auto-Tuning.	Default: <1> Min.: 10% of drive rated current Max.: 200% of drive rated current <2>	274
E2-02 (030F)	Motor Rated Slip	Motor Rated Slip	**V/f** **V/f w PG** **OLV** **CLV** OLV/PM AOLV/PM CLV/PM Sets the motor rated slip. Automatically set during Auto-Tuning.	Default: <1> Min.: 0.00 Hz Max.: 20.00 Hz	274
E2-03 (0310)	Motor No-Load Current	No-Load Current	**V/f** **V/f w PG** **OLV** **CLV** OLV/PM AOLV/PM CLV/PM Sets the no-load current for the motor. Automatically set during Auto-Tuning.	Default: <1> Min.: 0 A Max.: E2-01 <2>	275
E2-04 (0311)	Number of Motor Poles	Number of Poles	**V/f** **V/f w PG** **OLV** **CLV** OLV/PM AOLV/PM CLV/PM Sets the number of motor poles. Automatically set during Auto-Tuning.	Default: 4 Min.: 2 Max.: 48	275
E2-05 (0312)	Motor Line-to-Line Resistance	Term Resistance	**V/f** **V/f w PG** **OLV** **CLV** OLV/PM AOLV/PM CLV/PM Sets the phase-to-phase motor resistance. Automatically set during Auto-Tuning. **Note:** The units are expressed in mΩ in models 4A0930 and 4A1200.	Default: <1> Min.: 0.000 Ω Max.: 65.000 Ω	275
E2-06 (0313)	Motor Leakage Inductance	Leak Inductance	**V/f** **V/f w PG** **OLV** **CLV** OLV/PM AOLV/PM CLV/PM Sets the voltage drop due to motor leakage inductance as a percentage of motor rated voltage. Automatically set during Auto-Tuning.	Default: <1> Min.: 0.0% Max.: 40.0%	275
E2-07 (0314)	Motor Iron-Core Saturation Coefficient 1	Saturation Comp1	V/f V/f w PG **OLV** **CLV** OLV/PM AOLV/PM CLV/PM Sets the motor iron saturation coefficient at 50% of magnetic flux. Automatically set during Auto-Tuning.	Default: 0.50 Min.: 0.00 Max.: 0.50	275
E2-08 (0315)	Motor Iron-Core Saturation Coefficient 2	Saturation Comp2	V/f V/f w PG **OLV** **CLV** OLV/PM AOLV/PM CLV/PM Sets the motor iron saturation coefficient at 75% of magnetic flux. Automatically set during Auto-Tuning.	Default: 0.75 Min.: E2-07 Max.: 0.75	275
E2-09 (0316)	Motor Mechanical Loss	Mechanical Loss	V/f V/f w PG **OLV** **CLV** OLV/PM AOLV/PM CLV/PM Sets the motor mechanical loss as a percentage of motor rated power (kW).	Default: 0.0% Min.: 0.0 Max.: 10.0	276
E2-10 (0317)	Motor Iron Loss for Torque Compensation	Motor Iron Loss	**V/f** **V/f w PG** OLV CLV OLV/PM AOLV/PM CLV/PM Sets the motor iron loss.	Default: <1> Min.: 0 W Max.: 65535 W	276
E2-11 (0318)	Motor Rated Power	Mtr Rated Power	**V/f** **V/f w PG** **OLV** **CLV** OLV/PM AOLV/PM CLV/PM Sets the motor rated power in kilowatts (1 HP = 0.746 kW). Automatically set during Auto-Tuning.	Default: <1> Min.: 0.00 kW Max.: 650.00 kW	276

<1> Default setting is dependent on parameters C6-01, Drive Duty Selection, and o2-04, Drive Model Selection.

<2> Display is in the following units:
2A0004 to 2A0040, 4A0002 to 4A0023, and 5A0007 to 5A0017: 0.01 A units.
2A0056 to 2A0415, 4A0031 to 4A0675, and 5A0022 to 5A0242: 0.1 A units.
4A0930 and 4A1200: 1 A units.

◆ E3: V/f Pattern for Motor 2

These parameters are hidden when a PM motor control mode has been selected for motor 1 (A1-02 = 5, 6, 7).

No. (Addr. Hex)	Name	LCD Display	Description	Values	Page
E3-01 (0319)	Motor 2 Control Mode Selection	Mot 1 Contr Meth 0: V/f Control 1: V/f with PG 2: Open Loop Vector 3: Closed Loop Vect	V/f V/f w PG OLV CLV OLV/PM AOLV/PM CLV/PM 0: V/f Control 1: V/f Control with PG 2: Open Loop Vector Control 3: Closed Loop Vector Control	Default: 0 Range: 0 to 3	277
E3-04 (031A)	Motor 2 Maximum Output Frequency	Max Frequency	V/f V/f w PG OLV CLV OLV/PM AOLV/PM CLV/PM To set linear V/f characteristics, set the same values for E3-07 and E3-09. In this case, the setting for E3-08 will be disregarded. Ensure that the five frequencies are set according to the following rules to prevent triggering an oPE10 fault: E3-09 ≤ E3-07 < E3-06 ≤ E3-11 ≤ E3-04 Setting E3-11 to 0 disables both E3-11 and E3-12 and the above conditions do not apply. 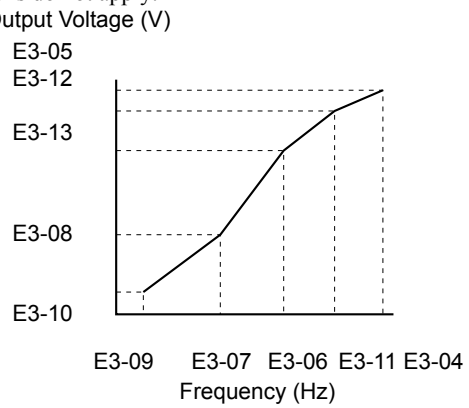 **Note:** E3-07 and E3-08 are only available in the following control modes: V/f, V/f w/PG and OLV.	Default: <1> Min.: 40.0 Max.: 400.0	277
E3-05 (031B)	Motor 2 Maximum Voltage	Max Voltage		Default: <1> <4> Min.: 0.0 V Max.: 255.0 V <2>	277
E3-06 (031C)	Motor 2 Base Frequency	Base Frequency		Default: <1> Min.: 0.0 Max.: E3-04	277
E3-07 (031D)	Motor 2 Mid Output Frequency	Mid Frequency A		Default: <1> Min: 0.0 Max: E3-04	277
E3-08 (031E)	Motor 2 Mid Output Frequency Voltage	Mid Voltage B		Default: <1> Min: 0.0 V Max: 255.0 V <2>	277
E3-09 (031F)	Motor 2 Minimum Output Frequency	Min Frequency		Default: <1> Min.: 0.0 Max.: E3-04	277
E3-10 (0320)	Motor 2 Minimum Output Frequency Voltage	Min Voltage		Default: <1> Min: 0.0 V Max: 255.0 V <2>	277
E3-11 (0345) <3>	Motor 2 Mid Output Frequency 2	Mid Frequency B		Default: 0.0 Hz Min.: 0.0 Max.: E3-04	277
E3-12 (0346) <3>	Motor 2 Mid Output Frequency Voltage 2	Mid Voltage B		Default: 0.0 V Min.: 0.0 Max.: 255.0 <2>	277
E3-13 (0347) <4>	Motor 2 Base Voltage	Base Voltage		Default: 0.0 V <4> Min.: 0.0 Max.: 255.0 <2>	277

<1> Default setting is determined by parameter E3-01, Motor 2 Control Mode Selection. The value shown here is for V/f Control (0).

<2> Values shown are specific to 200 V class drives. Double the value for 400 V class drives. Multiply the value by 2.875 for 600 V class drives.

<3> Ignored when E3-11, Motor 2 Mid Output Frequency 2, and E3-12, Motor 2 Mid Output Frequency Voltage 2, are set to 0.

<4> When E3-13, Motor 2 Base Voltage, is set to 0.0, output voltage is controlled with E3-05, Motor 2 Maximum Voltage, = E3-13. When Auto-Tuning is performed, E3-05 and E3-13 are automatically set to the same value.

◆ E4: Motor 2 Parameters

These parameters are hidden when a PM motor control mode has been selected for motor 1 (A1-02 = 5, 6, 7).

No. (Addr. Hex)	Name	LCD Display	Description	Values	Page
E4-01 (0321)	Motor 2 Rated Current	Motor Rated FLA	**V/f** **V/f w PG** **OLV** **CLV** OLV/PM AOLV/PM CLV/PM Sets the full load current for motor 2. Automatically set during Auto-Tuning.	Default: <1> Min.: 10% of drive rated current Max.: 200% of drive rated current <2>	278
E4-02 (0322)	Motor 2 Rated Slip	Motor Rated Slip	**V/f** **V/f w PG** **OLV** **CLV** OLV/PM AOLV/PM CLV/PM Sets the rated slip for motor 2. Automatically set during Auto-Tuning.	Default: <1> Min.: 0.00 Hz Max.: 20.00 Hz	278
E4-03 (0323)	Motor 2 Rated No-Load Current	No-Load Current	**V/f** **V/f w PG** **OLV** **CLV** OLV/PM AOLV/PM CLV/PM Sets the no-load current for motor 2. Automatically set during Auto-Tuning.	Default: <1> Min.: 0 A Max.: E4-01 <2>	278
E4-04 (0324)	Motor 2 Motor Poles	Number of Poles	**V/f** **V/f w PG** **OLV** **CLV** OLV/PM AOLV/PM CLV/PM Sets the number of poles of motor 2. Automatically set during Auto-Tuning.	Default: 4 Min.: 2 Max.: 48	279
E4-05 (0325)	Motor 2 Line-to-Line Resistance	Term Resistance	**V/f** **V/f w PG** **OLV** **CLV** OLV/PM AOLV/PM CLV/PM Sets the phase-to-phase resistance for motor 2. Automatically set during Auto-Tuning. **Note:** The units are expressed in mΩ in models 4A0930 and 4A1200.	Default: <1> Min.: 0.000 Ω Max.: 65.000 Ω	279
E4-06 (0326)	Motor 2 Leakage Inductance	Leak Inductance	**V/f** **V/f w PG** **OLV** **CLV** OLV/PM AOLV/PM CLV/PM Sets the voltage drop for motor 2 due to motor leakage inductance as a percentage of rated voltage. Automatically set during Auto-Tuning.	Default: <1> Min: 0.0% Max: 40.0%	279
E4-07 (0343)	Motor 2 Motor Iron-Core Saturation Coefficient 1	Saturation Comp1	V/f V/f w PG **OLV** **CLV** OLV/PM AOLV/PM CLV/PM Set to the motor iron saturation coefficient at 50% of magnetic flux for motor 2. Automatically set during Auto-Tuning.	Default: 0.50 Min.: 0.00 Max.: 0.50	279
E4-08 (0344)	Motor 2 Motor Iron-Core Saturation Coefficient 2	Saturation Comp2	V/f V/f w PG **OLV** **CLV** OLV/PM AOLV/PM CLV/PM Set to the motor iron saturation coefficient at 75% of magnetic flux for motor 2. This value is automatically set during Auto-Tuning.	Default: 0.75 Min.: E4-07 Max.: 0.75	279
E4-09 (033F)	Motor 2 Mechanical Loss	Mechanical Loss	V/f V/f w PG **OLV** **CLV** OLV/PM AOLV/PM CLV/PM Sets the motor mechanical loss for motor 2 as a percentage of motor rated power (kW). There is normally no need to change this parameter from the default value.	Default: 0.0% Min.: 0.0 Max.: 10.0	279
E4-10 (0340)	Motor 2 Iron Loss	Motor Iron Loss	**V/f** **V/f w PG** OLV CLV OLV/PM AOLV/PM CLV/PM Sets the motor iron loss.	Default: <1> Min.: 0 W Max.: 65535 W	280
E4-11 (0327)	Motor 2 Rated Power	Mtr Rated Power	**V/f** **V/f w PG** **OLV** **CLV** OLV/PM AOLV/PM CLV/PM Sets the motor rated capacity in kW. Automatically set during Auto-Tuning.	Default: <1> Min.: 0.00 kW Max.: 650.00 kW	280

<1> Default setting is determined by parameters C6-01, Drive Duty Selection, and o2-04, Drive Model Selection.

<2> Display is in the following units:
2A0004 to 2A0040, 4A0002 to 4A0023, and 5A0007 to 5A0017: 0.01 A units.
2A0056 to 2A0415, 4A0031 to 4A0675, and 5A0022 to 5A0242: 0.1 A units.
4A0930 and 4A1200: 1 A units.

◆ E5: PM Motor Settings

No. (Addr. Hex)	Name	LCD Display	Description	Values	Page
E5-01 (0329) <1>	Motor Code Selection (for PM Motors)	PM Mtr Code Sel	V/f, V/f w PG, OLV, CLV, **OLV/PM**, **AOLV/PM**, **CLV/PM** Enter the Yaskawa motor code for the PM motor being used. Various motor parameters are automatically set based on the value of this parameter. Settings that were changed manually will be overwritten by the defaults of the selected motor code. **Note:** 1. Set to FFFF when using a non-Yaskawa PM motor or a special motor. 2. If an alarm or hunting occurs despite using a motor code, enter the value indicated on the nameplate. *Refer to Auto-Tuning for Permanent Magnet Motors on page 177* for details.	Default: <2> Min.: 0000 Max.: FFFF <3>	*280*
E5-02 (032A) <1>	Motor Rated Power (for PM Motors)	PM Mtr Capacity	V/f, V/f w PG, OLV, CLV, **OLV/PM**, **AOLV/PM**, **CLV/PM** Sets the rated capacity of the motor.	Default: <4> Min.: 0.10 kW Max.: 650.00 kW	*281*
E5-03 (032B) <1>	Motor Rated Current (for PM Motors)	PM Mtr Rated FLA	V/f, V/f w PG, OLV, CLV, **OLV/PM**, **AOLV/PM**, **CLV/PM** Sets the motor rated current.	Default: <4> Min: 10% of drive rated current Max: 200% of drive rated current <5>	*281*
E5-04 (032C) <1>	Number of Motor Poles (for PM Motors)	PM Motor Poles	V/f, V/f w PG, OLV, CLV, **OLV/PM**, **AOLV/PM**, **CLV/PM** Sets the number of motor poles.	Default: <4> Min.: 2 Max.: 48	*281*
E5-05 (032D) <1>	Motor Stator Resistance (for PM Motors)	PM Mtr Arm Ohms	V/f, V/f w PG, OLV, CLV, **OLV/PM**, **AOLV/PM**, **CLV/PM** Set the resistance for each motor phase.	Default: <4> Min.: 0.000 Ω Max.: 65.000 Ω	*281*
E5-06 (032E) <1>	Motor d-Axis Inductance (for PM Motors)	PM Mtr d Induct	V/f, V/f w PG, OLV, CLV, **OLV/PM**, **AOLV/PM**, **CLV/PM** Sets the d-Axis inductance for the PM motor.	Default: <4> Min.: 0.00 mH Max.: 300.00 mH	*281*
E5-07 (032F) <1>	Motor q-Axis Inductance (for PM Motors)	PM Mtr q Induct	V/f, V/f w PG, OLV, CLV, **OLV/PM**, **AOLV/PM**, **CLV/PM** Sets the q-Axis inductance for the PM motor.	Default: <4> Min.: 0.00 mH Max.: 600.00 mH	*281*
E5-09 (0331) <1>	Motor Induction Voltage Constant 1 (for PM Motors)	PM Mtr Ind V 1	V/f, V/f w PG, OLV, CLV, **OLV/PM**, **AOLV/PM**, **CLV/PM** Sets the induced phase peak voltage in units of 0.1 mV/(rad/s) [electrical angle]. Set this parameter when using a Yaskawa SSR1-Series PM motor with derated torque, or a Yaskawa SST4-Series motor with constant torque. Set E5-24 to 0 when setting this parameter.	Default: <4> Min.: 0.0 mV/(rad/s) Max.: 2000.0 mV/(rad/s)	*282*
E5-11 (0333)	Encoder Z Pulse Offset (for PM Motors)	Enc Z-Pulse Offs	V/f, V/f w PG, OLV, CLV, OLV/PM, AOLV/PM, **CLV/PM** Sets the offset between the rotor magnetic axis and the Z Pulse of an incremental encoder during Z Pulse offset tuning.	Default: 0.0 deg Min.: -180 Max.: 180	*282*
E5-24 (0353) <1>	Motor Induction Voltage Constant 2 (for PM Motors)	PM Mtr Ind V 2	V/f, V/f w PG, OLV, CLV, **OLV/PM**, **AOLV/PM**, **CLV/PM** Sets the induced phase-to-phase rms voltage in units of 0.1 mV/(r/min) [mechanical angle]. Set this parameter when using a Yaskawa SMRA-Series SPM motor.	Default: <4> Min.: 0.0 mV/(r/min) Max.: 6500.0 mV/(r/min)	*282*

No. (Addr. Hex)	Name	LCD Display	Description	Values	Page
E5-25 (035E)	Polarity Switch for Initial Polarity Estimation Timeout (for PM Motors)	RotPolarityInvrs 0: Disabled 1: Enabled	V/f V/f w PG OLV CLV OLV/PM AOLV/PM CLV/PM Switches polarity for initial polarity estimation. 0: Disabled 1: Enabled There is normally no need to change this parameter from the default value. If "Sd = 1" is listed on the nameplate or in a test report for a Yaskawa motor, this parameter should be set to 1. **Note:** Available control mode varies by drive model: 2A0004 to 2A0415 and 4A0002 to 4A0675: Available when A1-02 = 6, 7 4A0930 and 4A1200: Available when A1-02 = 5, 6, or 7.	Default: 0 Range: 0, 1	*282*

<1> Setting value is not reset to the default when drive is initialized.

<2> Default setting is determined by parameters A1-02, Control Method Selection, o2-04, Drive Model Selection, and C6-01, Drive Duty Selection.

<3> Selections may vary depending on the motor code entered to E5-01.

<4> Default setting is determined by parameter E5-01, Motor Code Selection.

<5> Display is in the following units:
2A0004 to 2A0040, 4A0002 to 4A0023, and 5A0007 to 5A0017: 0.01 A units.
2A0056 to 2A0415, 4A0031 to 4A0675, and 5A0022 to 5A0242: 0.1 A units.
4A0930 and 4A1200: 1 A units.

B.8 F: Option Settings

F parameters program the drive for PG feedback from the motor and to function with option cards.

◆ F1: PG Speed Control Card (PG-B3, PG-X3, PG-RT3, PG-F3)

Parameters F1-01, F1-05, F1-06, F1-12, F1-13, and F1-18 through F1-21 include “PG 1” in the parameter name and are used to set up a PG option card plugged into option port CN5-C of the drive.

Parameters F1-31 through F1-37 include “PG 2” in the parameter name and are used to set up a PG option card plugged into option port CN5-B of the drive.

Other parameters in the F1 group are used to set operation for PG options plugged into port CN5-C and CN5-B.

No. (Addr. Hex)	Name	LCD Display	Description	Values	Page
F1-01 (0380)	PG 1 Pulses Per Revolution	PG1 Pulses/Rev	V/f **V/f w PG** OLV **CLV** OLV/PM AOLV/PM **CLV/PM** Sets the number of PG (pulse generator or encoder) pulses. Sets the number of pulses per motor revolution. **Note:** Setting range is 0 to 15000 ppr when A1-02 = 7 (CLV/PM control mode).	Default: 1024 ppr Min.: 1 Max.: 60000	*283*
F1-02 (0381)	Operation Selection at PG Open Circuit (PGo)	PG Fdbk Loss Sel 0: Ramp to Stop 1: Coast to Stop 2: Fast-Stop 3: Alarm Only 4: Not Detect	V/f **V/f w PG** OLV **CLV** OLV/PM AOLV/PM **CLV/PM** 0: Ramp to stop. Decelerate to stop using the deceleration time in C1-02. 1: Coast to stop. 2: Fast Stop. Decelerate to stop using the deceleration time in C1-09. 3: Alarm only. 4: No alarm display **Note:** Depending on motor speed and load conditions, an error such as ov or oC may occur.	Default: 1 Range: 0 to 4	*283*
F1-03 (0382)	Operation Selection at Overspeed (oS)	PG Overspeed Sel 0: Ramp to Stop 1: Coast to Stop 2: Fast-Stop 3: Alarm Only	V/f **V/f w PG** OLV **CLV** OLV/PM AOLV/PM **CLV/PM** 0: Ramp to stop. Decelerate to stop using the deceleration time in C1-02. 1: Coast to stop. 2: Fast Stop. Decelerate to stop using the deceleration time in C1-09. 3: Alarm only. **Note:** In AOLV/PM, the motor will coast to a stop (F1-03 = 1). The setting for F1-03 cannot be changed to 0, 2, or 3.	Default: 1 Range: 0 to 3	*283*
F1-04 (0383)	Operation Selection at Deviation	PG Deviation Sel 0: Ramp to Stop 1: Coast to Stop 2: Fast-Stop 3: Alarm Only	V/f **V/f w PG** OLV **CLV** OLV/PM **AOLV/PM** **CLV/PM** 0: Ramp to stop. Decelerate to stop using the deceleration time in C1-02. 1: Coast to stop. 2: Fast Stop. Decelerate to stop using the deceleration time in C1-09. 3: Alarm only.	Default: 3 Range: 0 to 3	*284*
F1-05 (0384)	PG 1 Rotation Selection	PG1 Rotation Sel 0: Fwd = C.C.W 1: Fwd = C.W.	V/f **V/f w PG** OLV **CLV** OLV/PM AOLV/PM **CLV/PM** 0: Pulse A leads 1: Pulse B leads	Default: <1> Range: 0, 1	*284*

No. (Addr. Hex)	Name	LCD Display	Description	Values	Page
F1-06 (0385)	PG 1 Division Rate for PG Pulse Monitor	PG1 Output Ratio	V/f **V/f w PG** OLV **CLV** OLV/PM AOLV/PM **CLV/PM** Sets the division ratio for the pulse monitor used of the PG option card installed to port CN5-C. When setting for a three-digit number "xyz", the division ratio becomes = [(1 + x) / yz]. If only using the A pulse for one-track input, the input ratio will be 1:1 regardless of F1-06 setting. **Note:** Values 033 to 101 are not available.	Default: 001 Min.: 001 Max.: 132	*284*
F1-08 (0387)	Overspeed Detection Level	PG Overspd Level	V/f **V/f w PG** OLV **CLV** OLV/PM **AOLV/PM** **CLV/PM** Sets the overspeed detection level as a percentage of the maximum output frequency.	Default: 115% Min.: 0 Max.: 120	*283*
F1-09 (0388)	Overspeed Detection Delay Time	PG Overspd Time	V/f **V/f w PG** OLV **CLV** OLV/PM **AOLV/PM** **CLV/PM** Sets the time in seconds for an overspeed situation to trigger a fault (oS).	Default: <1> Min.: 0.0 s Max.: 2.0 s	*283*
F1-10 (0389)	Excessive Speed Deviation Detection Level	PG Deviate Level	V/f **V/f w PG** OLV **CLV** OLV/PM **AOLV/PM** **CLV/PM** Sets the speed deviation detection level as a percentage of the maximum output frequency.	Default: 10% Min.: 0 Max.: 50	*284*
F1-11 (038A)	Excessive Speed Deviation Detection Delay Time	PG Deviate Time	V/f **V/f w PG** OLV **CLV** OLV/PM **AOLV/PM** **CLV/PM** Sets the time in seconds for a speed deviation situation to trigger a fault (dEv).	Default: 0.5 s Min.: 0.0 Max.: 10.0	*284*
F1-12 (038B)	PG 1 Gear Teeth 1	PG1 Gear Teeth1	V/f **V/f w PG** OLV CLV OLV/PM AOLV/PM CLV/PM Sets the gear ratio between the motor shaft and the encoder (PG). A gear ratio of 1 will be used if F1-12 or F1-13 are set to 0.	Default: 0 Min.: 0 Max.: 1000	*284*
F1-13 (038C)	PG 1 Gear Teeth 2	PG1 Gear Teeth2	V/f **V/f w PG** OLV CLV OLV/PM AOLV/PM CLV/PM Sets the gear ratio between the motor shaft and the encoder (PG). A gear ratio of 1 will be used if F1-12 or F1-13 are set to 0.	Default: 0 Min.: 0 Max.: 1000	*284*
F1-14 (038D)	PG Open-Circuit Detection Time	PGO Detect Time	V/f **V/f w PG** OLV **CLV** OLV/PM AOLV/PM **CLV/PM** Sets the time required to trigger a PG Open fault (PGo).	Default: 2.0 s Min.: 0.0 Max.: 10.0	*283*
F1-18 (03AD)	dv3 Detection Selection	DV3 Det Sel	V/f V/f w PG OLV CLV OLV/PM AOLV/PM **CLV/PM** 0: Disabled n: Number of dv3 occurrences that must be detected to trigger a dv3 fault.	Default: 10 Min.: 0 Max.: 10	*285*
F1-19 (03AE)	dv4 Detection Selection	DV4 Det Sel	V/f V/f w PG OLV CLV OLV/PM AOLV/PM **CLV/PM** 0: Disabled n: Number of pulses that the A and B pulse are reversed that triggers dv4 detection.	Default: 128 Min.: 0 Max.: 5000	*285*
F1-20 (03B4)	PG Option Card Disconnect Detection 1	PGCardDisconDet1 0: Disabled 1: Enabled	V/f **V/f w PG** OLV **CLV** OLV/PM AOLV/PM **CLV/PM** 0: Disabled 1: Enabled	Default: 1 Range: 0, 1	*285*
F1-21 (03BC)	PG 1 Signal Selection	PG1 Signal Sel 1 0: A Phase Det 1: A,B Phase Det	V/f **V/f w PG** OLV CLV OLV/PM AOLV/PM CLV/PM 0: A pulse detection 1: AB pulse detection	Default: 0 Range: 0, 1	*285*

No. (Addr. Hex)	Name	LCD Display	Description	Values	Page
F1-30 (03AA)	PG Card Option Port for Motor 2 Selection	Mtr2 PG Port Sel 0: Port CN5-C 1: Port CN5-B	V/f, **V/f w PG**, OLV, **CLV**, OLV/PM, AOLV/PM, CLV/PM 0: CN5-C 1: CN5-B	Default: 1 Range: 0, 1	285
F1-31 (03B0)	PG 2 Pulses Per Revolution	PG2 Pulses/Rev	V/f, **V/f w PG**, OLV, **CLV**, OLV/PM, AOLV/PM, CLV/PM Sets the number of pulses for a PG option card connected to port CN5-B.	Default: 1024 ppr Min.: 1 Max.: 60000	283
F1-32 (03B1)	PG 2 Rotation Selection	PG2 Rotation Sel 0: Fwd = C.C.W 1: Fwd = C.W.	V/f, **V/f w PG**, OLV, **CLV**, OLV/PM, AOLV/PM, CLV/PM 0: Pulse A leads 1: Pulse B leads	Default: 0 Range: 0, 1	284
F1-33 (03B2)	PG 2 Gear Teeth 1	PG2 Gear Teeth1	V/f, **V/f w PG**, OLV, CLV, OLV/PM, AOLV/PM, CLV/PM Sets the gear ratio between the motor shaft and the encoder (PG). A gear ratio of 1 will be used if F1-33 or F1-34 are set to 0.	Default: 0 Min.: 0 Max.: 1000	284
F1-34 (03B3)	PG 2 Gear Teeth 2	PG2 Gear Teeth2	V/f, **V/f w PG**, OLV, CLV, OLV/PM, AOLV/PM, CLV/PM Sets the gear ratio between the motor shaft and the encoder (PG). A gear ratio of 1 will be used if F1-33 or F1-34 are set to 0.	Default: 0 Min.: 0 Max.: 1000	284
F1-35 (03BE)	PG 2 Division Rate for Pulse Monitor	PG2 Output Ratio	V/f, **V/f w PG**, OLV, **CLV**, OLV/PM, AOLV/PM, CLV/PM Sets the division ratio for the pulse monitor used of the PG option card 2 installed to port CN5-B. When setting for a three-digit number “xyz”, the division ratio becomes = [(1 + x) / yz]. **Note:** Values 033 to 101 are not available.	Default: 001 Min.: 001 Max.: 132	284
F1-36 (03B5)	PG Option Card Disconnect Detection 2	PGCardDisconDet1 0: Disabled 1: Enabled	V/f, **V/f w PG**, OLV, **CLV**, OLV/PM, AOLV/PM, CLV/PM 0: Disabled 1: Enabled	Default: 1 Range: 0, 1	285
F1-37 (03BD)	PG 2 Signal Selection	PG2 Signal Sel 0: A Phase Det 1: A,B Phase Det	V/f, **V/f w PG**, OLV, CLV, OLV/PM, AOLV/PM, CLV/PM 0: A pulse detection 1: AB pulse detection	Default: 0 Range: 0, 1	285
F1-50 (03D2) <2>	Encoder Selection	Encoder Select 0: EnDat Sin/Cos 1: EnDat SerialOnly 2: Hiperface	V/f, V/f w PG, OLV, CLV, OLV/PM, AOLV/PM, **CLV/PM** Selects the encoder connected the PG-F3 option. 0: EnDat 2.1/01, 2.2/01 Serial Communication + Sin/Cos 1: EnDat 2.2/22 Serial Communication 2: Hiperface **Note:** 1. Parameter is not available in models 4A0930 and 4A1200. 2. The use of EnDat2.2/22 encoders requires a PG-F3 option with software version 0102 or later. To identify the PG-F3 software version refer to the PG-F3 label in the field designated “C/N” (S + four digit number).	Default: 0 Range: 0 to 2	286
F1-51 (03D3) <2>	PGoH Detection Level	PGOH Det Level	V/f, V/f w PG, OLV, CLV, OLV/PM, AOLV/PM, **CLV/PM** Sets the level for detecting PG Hardware Fault (PGoH). Available when F1-20 = 1 **Note:** Parameter is not available in models 4A0930 and 4A1200.	Default: 80% Min.: 1 Max.: 100	286

No. (Addr. Hex)	Name	LCD Display	Description	Values	Page
F1-52 (03D4) <2>	Communication Speed of Serial Encoder Selection	Ser Enc Comm Spd 0: 1M/9600bps 1: 500k/19200bps 2: 1M/38400bps 3: 1M/38400bps	V/f V/f w PG OLV CLV OLV/PM AOLV/PM **CLV/PM** Selects the communication speed between the PG-F3 option and serial encoder. 0: 1M bps/9600 bps (EnDat 2.2/22 / Hiperface) 1: 500k bps/19200 bps (EnDat 2.2/22 / Hiperface) 2: 1M bps/38400 bps (EnDat 2.2/22 / Hiperface) 3: 1M bps/38400 bps (EnDat 2.2/22 / Hiperface) **Note:** Parameter is not available in models 4A0930 and 4A1200.	Default: 0 Range: 0 to 3	*286*

<1> Default setting is determined by parameter A1-02, Control Method Selection.

<2> Available in drive software versions PRG: 1018 and later.

◆ F2: Analog Input Card Settings (AI-A3)

No. (Addr. Hex)	Name	LCD Display	Description	Values	Page
F2-01 (038F)	Analog Input Option Card Operation Selection	AI Function Sel 0: 3ch Individual 1: 3ch Addition	**All Modes** 0: Option card input terminals V1, V2, and V3 replace drive input terminals A1, A2, and A3. 1: Input signals to terminals V1, V2, and V3 are added together to create the frequency reference.	Default: 0 Range: 0, 1	*286*
F2-02 (0368) RUN	Analog Input Option Card Gain	AI Input Gain	**All Modes** Sets the gain for the input signal to the analog card.	Default: 100.0% Min.: -999.9 Max.: 999.9	*287*
F2-03 (0369) RUN	Analog Input Option Card Bias	AI Input Bias	**All Modes** Sets the bias for the input signal to the analog card.	Default: 0.0% Min.: -999.9 Max.: 999.9	*287*

◆ F3: Digital Input Card Settings (DI-A3)

No. (Addr. Hex)	Name	LCD Display	Description	Values	Page
F3-01 (0390)	Digital Input Option Card Input Selection	DI Function Sel 0: BCD 1% 1: BCD 0.1% 2: BCD 0.01% 3: BCD 1 Hz 4: BCD 0.1 Hz 5: BCD 0.01 Hz 6: BCD(5DG) 0.01 Hz 7: Binary	**All Modes** 0: BCD, 1% units 1: BCD, 0.1% units 2: BCD, 0.01% units 3: BCD, 1 Hz units 4: BCD, 0.1 Hz units 5: BCD, 0.01 Hz units 6: BCD customized setting (5-digit), 0.02 Hz units 7: Binary input The unit and the setting range are determined by F3-03. F3-03 = 0: 255/100% (-255 to +255) F3-03 = 1: 40961/100% (-4095 to +4095) F3-03 = 2: 30000/100% (-33000 to +33000) When the digital operator units are set to be displayed in Hz or user-set units (o1-03 = 2 or 3), the units for F3-01 are determined by parameter o1-03.	Default: 0 Range: 0 to 7	*287*
F3-03 (03B9)	Digital Input Option DI-A3 Data Length Selection	Data length Sel 0: 8bit 1: 12bit 2: 16bit	**All Modes** 0: 8 bit 1: 12 bit 2: 16 bit	Default: 2 Range: 0 to 2	*287*

◆ F4: Analog Monitor Card Settings (AO-A3)

No. (Addr. Hex)	Name	LCD Display	Description	Values	Page
F4-01 (0391)	Terminal V1 Monitor Selection	AO Ch1 Select	All Modes Sets the monitor signal for output from terminal V1. Set this parameter to the last three digits of the desired U□-□□ monitor. Some U parameters are available only in certain control modes.	Default: 102 Range: 000 to 999 <1>	288
F4-02 (0392) RUN	Terminal V1 Monitor Gain	AO Ch1 Gain	All Modes Sets the gain for voltage output via terminal V1.	Default: 100.0% Min.: -999.9 Max.: 999.9	288
F4-03 (0393)	Terminal V2 Monitor Selection	AO Ch2 Select	All Modes Sets the monitor signal for output from terminal V2. Set this parameter to the last three digits of the desired U□-□□ monitor. Some U parameters are available only in certain control modes.	Default: 103 Range: 000 to 999 <1>	288
F4-04 (0394) RUN	Terminal V2 Monitor Gain	AO Ch2 Gain	All Modes Sets the gain for voltage output via terminal V2.	Default: 50.0% Min.: -999.9 Max.: 999.9	288
F4-05 (0395) RUN	Terminal V1 Monitor Bias	AO Ch1 Bias	All Modes Sets the amount of bias added to the voltage output via terminal V1.	Default: 0.0% Min.: -999.9 Max.: 999.9	288
F4-06 (0396) RUN	Terminal V2 Monitor Bias	AO Ch2 Bias	All Modes Sets the amount of bias added to the voltage output via terminal V2.	Default: 0.0% Min.: -999.9 Max.: 999.9	288
F4-07 (0397)	Terminal V1 Signal Level	AO Opt Level Ch1 0: 0-10 VDC 1: -10 +10 VDC	All Modes 0: 0 to 10 V 1: -10 to 10 V	Default: 0 Range: 0, 1	288
F4-08 (0398)	Terminal V2 Signal Level	AO Opt Level Ch2 0: 0-10 VDC 1: -10 +10 VDC	All Modes 0: 0 to 10 V 1: -10 to 10 V	Default: 0 Range: 0, 1	288

<1> Set to 000 or 031 when using the terminal in the through mode. This setting can adjust the V1 and V2 terminal output from PLC via MEMOBUS/Modbus communications or communications option.

◆ F5: Digital Output Card Settings (DO-A3)

No. (Addr. Hex)	Name	LCD Display	Description	Values	Page
F5-01 (0399)	Terminal P1-PC Output Selection	DO Ch1 Select	All Modes Sets the function for contact output terminals M1-M2, M3-M4, and photocoupler output terminals P1 through P6.	Default: 2 Range: 0 to 192	289
F5-02 (039A)	Terminal P2-PC Output Selection	DO Ch2 Select		Default: 4 Range: 0 to 192	289
F5-03 (039B)	Terminal P3-PC Output Selection	DO Ch3 Select		Default: 6 Range: 0 to 192	289
F5-04 (039C)	Terminal P4-PC Output Selection	DO Ch4 Select		Default: 37 Range: 0 to 192	289
F5-05 (039D)	Terminal P5-PC Output Selection	DO Ch5 Select		Default: F Range: 0 to 192	289
F5-06 (039E)	Terminal P6-PC Output Selection	DO Ch6 Select		Default: F Range: 0 to 192	289
F5-07 (039F)	Terminal M1-M2 Output Selection	DO Ch7 Select		Default: 0 Range: 0 to 192	289
F5-08 (03A0)	Terminal M3-M4 Output Selection	DO Ch8 Select		Default: 1 Range: 0 to 192	289

No. (Addr. Hex)	Name	LCD Display	Description	Values	Page
F5-09 (03A1)	DO-A3 Output Mode Selection	DO Function Sel	All Modes 0: Output terminals are each assigned separate output functions. 1: Binary code output. 2: Use output terminal functions selected by parameters F5-01 through F5-08.	Default: 0 Range: 0 to 2	289

◆ F6: Communication Option Card Settings (SI-B3, SI-C3, SI-ES3, SI-ET3, SI-N3, SI-P3, SI-S3, SI-T3, SI-W3)

Parameters F6-01 through F6-03, F6-06 through F6-08, F6-14, and F7-16 are used for CC-Link, CANopen, DeviceNet, EtherCAT, PROFINET, BACnet, LonWorks, PROFIBUS-DP, MECHATROLINK-II, and MECHATROLINK-III options. Other parameters in the F6 group are used for communication-protocol-specific settings. For more details on a specific option card, refer to the instruction manual for the option.

No. (Addr. Hex)	Name	LCD Display	Description	Values	Page
F6-01 (03A2)	Communications Error Operation Selection	Comm Bus Flt Sel 0: Ramp to Stop 1: Coast to Stop 2: Fast-Stop 3: Alarm Only 4: Alarm(d1-04) 5: Alm – Ramp Stop	All Modes 0: Ramp to stop. Decelerate to stop using the deceleration time in C1-02. 1: Coast to stop. 2: Fast Stop. Decelerate to stop using the deceleration time in C1-09. 3: Alarm only. 4: Alarm and Run at d1-04 5: Alarm and Ramp to stop (automatic recovery) **Note:** Take proper safety measures, such as installing an emergency stop switch, when setting F6-01 to 3 or 4.	Default: 1 Range: 0 to 5	290
F6-02 (03A3)	External Fault from Comm. Option Detection Selection	EF0 Detection 0: Always Detected 1: Only During Run	All Modes 0: Always detected. 1: Detection during run only.	Default: 0 Range: 0, 1	290
F6-03 (03A4)	External Fault from Comm. Option Operation Selection	EF0 Fault Action 0: Ramp to Stop 1: Coast to Stop 2: Fast-Stop 3: Alarm Only	All Modes 0: Ramp to stop. Decelerate to stop using the deceleration time in C1-02. 1: Coast to stop. 2: Fast Stop. Decelerate to stop using the deceleration time in C1-09. 3: Alarm only.	Default: 1 Range: 0 to 3	290
F6-04 (03A5)	bUS Error Detection Time	BUS Err Det Time	All Modes Sets the delay time for error detection if a bus error occurs.	Default: 2.0 s Min.: 0.0 Max.: 5.0	291
F6-06 (03A7)	Torque Reference/ Torque Limit Selection from Comm. Option	Torq Ref/Lmt Sel 0: Disabled 1: Enabled	V/f V/f w PG OLV CLV OLV/PM AOLV/PM CLV/PM 0: Disabled. Torque reference/limit from option board disabled. 1: Enabled. Torque reference/limit from option board enabled.	Default: 0 Range: 0, 1	290
F6-07 (03A8)	Multi-Step Speed Enable/Disable Selection when NefRef/ ComRef is Selected	Fref PrioritySel 0: Net/Com REF 1: MultiStep Speed	All Modes 0: Multi-step reference disabled (same as F7) 1: Multi-step reference enabled (same as V7)	Default: 0 Range: 0, 1	291
F6-08 (036A) <1>	Reset Communication Parameters	Com Prm Init Sel 0: Init Com Prms 1: No Init Com Prms	All Modes 0: Communication-related parameters (F6-□□/F7-□□) are not reset when the drive is initialized using A1-03. 1: Reset all communication-related parameters (F6-□□/F7-□□) when the drive is initialized using A1-03.	Default: 0 Range: 0, 1	291
F6-10 (03B6)	CC-Link Node Address	CC-Link Node Add	All Modes Sets the node address if a CC-Link option is installed.	Default: 0 Min.: 0 Max.: 64	292

No. (Addr. Hex)	Name	LCD Display	Description	Values	Page
F6-11 (03B7)	CC-Link Communication Speed	CC-Link Baud 0: 156 kbps 1: 625 kbps 2: 2.5 Mbps 3: 5 Mbps 4: 10 Mbps	All Modes 0: 156 Kbps 1: 625 Kbps 2: 2.5 Mbps 3: 5 Mbps 4: 10 Mbps	Default: 0 Range: 0 to 4	292
F6-14 (03BB)	bUS Error Auto Reset	Bus Err Auto Rst 0: Disabled 1: Enabled	All Modes 0: Disabled 1: Enabled	Default: 0 Range: 0, 1	291
F6-20 (036B)	MECHATROLINK Station Address	Station Address	All Modes Sets the station address when the MECHATROLINK option has been installed.	Default: 21 Min.: 20 <2> Max.: 3F <2>	292
F6-21 (036C)	MECHATROLINK Frame Size	Frame length	All Modes 0: 32-byte <3> 1: 17-byte <3>	Default: 0 Range: 0, 1	292
F6-22 (036D)	MECHATROLINK Link Speed	Link Speed 0: 10MHz 1: 4MHz	All Modes 0: 10 Mbps 1: 4 Mbps	Default: 0 Range: 0, 1	292
F6-23 (036E)	MECHATROLINK Monitor Selection (E)	Mon E register	All Modes Sets the MECHATROLINK monitor (E).	Default: 0 Min.: 0 Max.: FFFF	292
F6-24 (036F)	MECHATROLINK Monitor Selection (F)	Mon F register	All Modes Sets the MECHATROLINK monitor (F).	Default: 0 Min.: 0 Max.: FFFF	293
F6-25 (03C9)	Operation Selection at MECHATROLINK Watchdog Timer Error (E5)	SI-T WDTErr Sel 0: Ramp to Stop 1: Coast to Stop 2: Fast-Stop 3: Alarm Only	All Modes 0: Ramp to stop. Decelerate using the deceleration time in C1-02. 1: Coast to stop 2: Fast stop. Decelerate using the deceleration time in C1-09. 3: Alarm only	Default: 1 Range: 0 to 3	293
F6-26 (03CA)	MECHATROLINK bUS Errors Detected	Num of SI-T BUS	All Modes Sets the number of option communication errors (bUS).	Default: 2 Min.: 2 Max.: 10	293
F6-30 (03CB)	PROFIBUS-DP Node Address	PB Node Address	All Modes Sets the node address.	Default: 0 Min.: 0 Max.: 125	293
F6-31 (03CC)	PROFIBUS-DP Clear Mode Selection	PB Clear Select 0: Reset to Zero 1: Hold Prev Value	All Modes 0: Resets drive operation with a Clear mode command. 1: Maintains the previous operation state when Clear mode command is given.	Default: 0 Range: 0, 1	293
F6-32 (03CD)	PROFIBUS-DP Data Format Selection	PB Map Select 0: PPO Type 1: Conventional 2: PPO (bit0) 3: PPO (Enter) 4: Conv (Enter) 5: PPO (bit0,Enter)	All Modes 0: PPO Type 1: Conventional 2: PPO (w/bit 0) 3: PPO Type (Auto Enter) 4: Conventional (Auto Enter) 5: PPO (w/bit0, Auto Enter)	Default: 0 Range: 0 to 5	293
F6-35 (03D0)	CANopen Node ID Selection	CO Node Address	All Modes Sets the node address.	Default: 0 Min.: 0 Max.: 126	294
F6-36 (03D1)	CANopen Communication Speed	CO Baud Rate 0: Auto Detect 1: 10 kbps 2: 20 kbps 3: 50 kbps 4: 125 kbps 5: 250 kbps 6: 500 kbps 7: 800 kbps 8: 1Mbps	All Modes 0: Auto-detection 1: 10 kbps 2: 20 kbps 3: 50 kbps 4: 125 kbps 5: 250 kbps 6: 500 kbps 7: 800 kbps 8: 1 Mbps	Default: 6 Range: 0 to 8	294

No. (Addr. Hex)	Name	LCD Display	Description	Values	Page
F6-40 (03D5)	CompoNet Node Address	CN Node Adress	All Modes Reserved.	–	–
F6-41 (03D6)	CompoNet Communication Speed	CN Baud Rate	All Modes Reserved.	–	–
F6-45 (02FB)	BACnet Node Address	BAC Node Address	All Modes Sets BACnet physical node address.	Default: 1 Min.: 0 Max.: 127	294
F6-46 (02FC)	BACnet Baud Rate	BAC Baud Rate 0: 1200 bps 1: 2400 bps 2: 4800 bps 3: 9600 bps 4: 19.2 kbps 5: 38.4 kbps 6: 57.6 kbps 7: 76.8 kbps 8: 115.2 kbps	All Modes 0: 1200 1: 2400 2: 4800 3: 9600 4: 19200 5: 38400 6: 57600 7: 76800 8: 115200	Default: 3 Range: 0 to 8	294
F6-47 (02FD)	Rx to Tx Wait Time	Rx to Tx Wait T	All Modes Sets the wait time between receiving and sending for BACnet.	Default: 5 ms Min.: 5 Max.: 65	295
F6-48 (02FE)	BACnet Device Object Identifier 0	BAC Dev Obj Id 0	All Modes Sets the least significant word for BACnet.	Default: 0 Min.: 0 Max.: FFFF	295
F6-49 (02FF)	BACnet Device Object Identifier 1	BAC Dev Obj Id 1	All Modes Sets the most significant word for BACnet.	Default: 0 Min.: 0 Max.: 3F	295
F6-50 (03C1)	DeviceNet MAC Address	DN MAC Address	All Modes Selects the drive MAC address.	Default: 64 Min.: 0 Max.: 64	295
F6-51 (03C2)	DeviceNet Communication Speed	DN Baud Rate 0: 125 kbps 1: 250 kbps 2: 500 kbps 3: Set from Network 4: Auto Detect	All Modes 0: 125 kbps 1: 250 kbps 2: 500 kbps 3: Adjustable from network 4: Detect automatically	Default: 4 Range: 0 to 4	295
F6-52 (03C3)	DeviceNet PCA Setting	PCA Selection	All Modes Sets the format of the data set from the DeviceNet master to the drive.	Default: 21 Min.: 0 Max.: 255	295
F6-53 (03C4)	DeviceNet PPA Setting	PPA Selection	All Modes Sets the format of the data set from the drive to the DeviceNet master.	Default: 71 Min.: 0 Max.: 255	296
F6-54 (03C5)	DeviceNet Idle Mode Fault Detection	DN Idle Flt Det 0: Stop 1: Ignore 2: Vendor Specific 3: Run Fwd 4: Run Rev	All Modes 0: Enabled 1: Disabled, no fault detection 2: Vendor Specific 3: Forward 4: Reverse	Default: 0 Range: 0 to 4	296
F6-55 (03C6)	DeviceNet Baud Rate Monitor	DN BAUD RATE MEM 0: 125 kbps 1: 250 kbps 2: 500 kbps	All Modes Verifies the baud rate running on the network. 0: 125 kbps 1: 250 kbps 2: 500 kbps	Default: 0 Range: 0 to 2	296
F6-56 (03D7)	DeviceNet Speed Scaling	Speed Scale	All Modes Sets the scaling factor for the speed monitor in DeviceNet.	Default: 0 Min.: -15 Max.: 15	296
F6-57 (03D8)	DeviceNet Current Scaling	Current Scale	All Modes Sets the scaling factor for the output current monitor in DeviceNet.	Default: 0 Min.: -15 Max.: 15	296

No. (Addr. Hex)	Name	LCD Display	Description	Values	Page
F6-58 (03D9)	DeviceNet Torque Scaling	Torque Scale	All Modes Sets the scaling factor for the torque monitor in DeviceNet.	Default: 0 Min.: -15 Max.: 15	296
F6-59 (03DA)	DeviceNet Power Scaling	Power Scale	All Modes Sets the scaling factor for the power monitor in DeviceNet.	Default: 0 Min.: -15 Max.: 15	296
F6-60 (03DB)	DeviceNet Voltage Scaling	Voltage Scale	All Modes Sets the scaling factor for the voltage monitor in DeviceNet.	Default: 0 Min.: -15 Max.: 15	296
F6-61 (03DC)	DeviceNet Time Scaling	Time Scale	All Modes Sets the scaling factor for the time monitor in DeviceNet.	Default: 0 Min.: -15 Max.: 15	296
F6-62 (03DD)	DeviceNet Heartbeat Interval	DN Heart Beat	All Modes Sets the heartbeat interval for DeviceNet communications.	Default: 0 Min.: 0 Max.: 10	296
F6-63 (03DE)	DeviceNet Network MAC ID	DN MAC ID MEM	All Modes Saves and monitors settings 0 to 63 of F6-50 (DeviceNet MAC Address).	Default: 63 Min.: 0 Max.: 63	297
F6-64 to F6-71 (03DF to 03C8)	Reserved	–	All Modes Reserved for Dynamic I/O Assembly Parameters.	–	–
F6-72 (081B)	PowerLink Node Address	PowerLink NodeID	All Modes Reserved.	–	–

<1> Parameter setting value is not reset to the default value when the drive is initialized.

<2> Values shown are for the MECHATROLINK-II option (SI-T3). Values for MECHATROLINK-III option (SI-ET3) are: Min: 03, Max.: EF

<3> Values shown are for the MECHATROLINK-II option (SI-T3). Values for MECHATROLINK-III option (SI-ET3) are: 0: 64-byte, 1: 32-byte

◆ F7: Communication Option Card Settings (SI-EM3, SI-EN3, SI-EP3)

F7 parameters are used for EtherNet/IP, Modbus TCP/IP, and PROFINET options. Other parameters in the F7 group are used for communication-protocol-specific settings. For more details on a specific option card, refer to the instruction manual for the option.

No. (Addr. Hex)	Name	LCD Display	Description	Values	Page
F7-01 (03E5) <1>	IP Address 1	IP Address 1	All Modes Sets the most significant octet of network static IP address.	Default: 192 Range: 0 to 255	–
F7-02 (03E6) <1>	IP Address 2	IP Address 2	All Modes Sets the second most significant octet of network static IP address.	Default: 168 Range: 0 to 255	–
F7-03 (03E7) <1>	IP Address 3	IP Address 3	All Modes Sets the third most significant octet of network static IP address.	Default: 1 Range: 0 to 255	–
F7-04 (03E8) <1>	IP Address 4	IP Address 4	All Modes Sets the fourth most significant octet of network static IP address.	Default: 20 Range: 0 to 255	–
F7-05 (03E9)	Subnet Mask 1	Subnet Mask 1	All Modes Sets the most significant octet of network static Subnet Mask.	Default: 255 Range: 0 to 255	–
F7-06 (03EA)	Subnet Mask 2	Subnet Mask 2	All Modes Sets the second most significant octet of network static Subnet Mask.	Default: 255 Range: 0 to 255	–
F7-07 (03EB)	Subnet Mask 3	Subnet Mask 3	All Modes Sets the third most significant octet of network static Subnet Mask.	Default: 255 Range: 0 to 255	–

No. (Addr. Hex)	Name	LCD Display	Description	Values	Page
F7-08 (03EC)	Subnet Mask 4	Subnet Mask 4	All Modes Sets the fourth most significant octet of network static Subnet Mask.	Default: 0 Range: 0 to 255	–
F7-09 (03ED)	Gateway Address 1	Gateway IP Add 1	All Modes Sets the most significant octet of network Gateway address.	Default: 192 Range: 0 to 255	–
F7-10 (03EE)	Gateway Address 2	Gateway IP Add 2	All Modes Sets the second most significant octet of network Gateway address.	Default: 168 Range: 0 to 255	–
F7-11 (03EF)	Gateway Address 3	Gateway IP Add 3	All Modes Sets the third most significant octet of network Gateway address.	Default: 1 Range: 0 to 255	–
F7-12 (03F0)	Gateway Address 4	Gateway IP Add 4	All Modes Sets the fourth most significant octet of network Gateway address.	Default: 1 Range: 0 to 255	–
F7-13 (03F1)	Address Mode at Startup	IP Add Mode Sel 0: User Defined 1: BOOTP 2: DHCP	All Modes Select the option address setting method 0: Static <2> 1: BOOTP 2: DHCP	Default: 2 Range: 0 to 2	–
F7-14 (03F2)	Duplex Mode Selection	Duplex Select 0: Half/Half 1: Auto/Auto 2: Full/Full 3: Half/Auto 4: Half/Full 5: Auto/Half 6: Auto/Full 7: Full/Half 8: Full/Auto	All Modes Selects duplex mode setting. 0: Half duplex forced 1: Auto-negotiate duplex mode and communication speed 2: Full duplex forced 3: Half duplex forced (port 1)/Auto-negotiate duplex mode and communication speed (port 2) 4: Half duplex forced (port 1)/Full duplex forced (port 2) 5: Auto-negotiate duplex mode and communication speed (port 1)/Half duplex forced (port 2) 6: Auto-negotiate duplex mode and communication speed (port 1)/Full duplex forced (port 2) 7: Full duplex forced (port 1)/Half duplex forced (port 2) 8: Full duplex forced (port 1)/Auto-negotiate duplex mode and communication speed (port 2)	Default: 1 Range: 0 to 8	–
F7-15 (03F3)	Communication Speed Selection	Baud Rate 10: 10/10 Mbps 100: 100/100 Mbps 101: 10/100 Mbps 102: 100/10 Mbps	All Modes Sets the communication speed 10: 10 Mbps 100: 100 Mbps 101: 10 Mbps (port 1)/100 Mbps (port 2) 102: 100 Mbps (port 1)/10 Mbps (port 2)	Default: 10 Range: 10 to 102	–
F7-16 (03F4)	Communication Loss Time Out	CommLoss Tout	All Modes Sets the time out value for communication loss detection in tenths of a second. A value of 0 disables the connection time out. Example: An entered value of 100 represents 10.0 seconds.	Default: 0.0 s Min.: 0.0 Max.: 30.0	–
F7-17 (03F5)	EtherNet/IP Speed Scaling Factor	EN Speed Scale	All Modes Sets the scaling factor for the speed monitor in EtherNet/IP Class ID 2AH Object.	Default: 0 Min.: -15 Max.: 15	–
F7-18 (03F6)	EtherNet/IP Current Scaling Factor	EN Current Scale	All Modes Sets the scaling factor for the output current monitor in EtherNet/IP Class ID 2AH Object.	Default: 0 Min.: -15 Max.: 15	–
F7-19 (03F7)	EtherNet/IP Torque Scaling Factor	EN Torque Scale	All Modes Sets the scaling factor for the torque monitor in EtherNet/IP Class ID 2AH Object.	Default: 0 Min.: -15 Max.: 15	–
F7-20 (03F8)	EtherNet/IP Power Scaling Factor	EN Power Scale	All Modes Sets the scaling factor for the power monitor in EtherNet/IP Class ID 2AH Object.	Default: 0 Min.: -15 Max.: 15	–

No. (Addr. Hex)	Name	LCD Display	Description	Values	Page
F7-21 (03F9)	EtherNet/IP Voltage Scaling Factor	EN Voltage Scale	All Modes Sets the scaling factor for the voltage monitor in EtherNet/IP Class ID 2AH Object.	Default: 0 Min.: -15 Max.: 15	–
F7-22 (03FA)	EtherNet/IP Time Scaling	EN Time Scale	All Modes Sets the scaling factor for the time monitor in EtherNet/IP Class ID 2AH Object.	Default: 0 Min.: -15 Max.: 15	–
F7-23 to F7-27 (03FB to 03FF) F7-28 to F7-32 (0370 to 0374)	Dynamic Output Assembly Parameters	–	All Modes Parameters used in Output Assembly 116. Each parameter contains a MEMOBUS/Modbus address. The value received for Output Assembly 116 will be written to this corresponding MEMOBUS/Modbus address. A MEMOBUS/Modbus address value of 0 means that the value received for Output Assembly 116 will not be written to any MEMOBUS/Modbus register.	Default: 0	–
F7-33 to F7-42 (0375 to 037E)	Dynamic Input Assembly Parameters	–	All Modes Parameters used in Input Assembly 166. Each parameter contains a MEMOBUS/Modbus address. The value sent for Input Assembly 166 will be read from this corresponding MEMOBUS/Modbus address. A MEMOBUS/Modbus address value of 0 means that the value sent for Input Assembly 166 is not defined by the user, therefore the option default register value will be returned.	Default: 0	–
F7-60 (0780)	PZD1 Write	PZD1 Write	All Modes Sets MEMOBUS/Modbus address for PZD1 Write (PPO Write). Values 0 to 2 enable the PZD1 Write as STW.	Default: 0 Min.: 0 Max.: FFFF	–
F7-61 (0781)	PZD2 Write	PZD2 Write	All Modes Sets MEMOBUS/Modbus address for PZD2 Write (PPO Write). Values 0 to 2 enable the PZD2 Write as HSW.	Default: 0 Min.: 0 Max.: FFFF	–
F7-62 (0782)	PZD3 Write	PZD3 Write	All Modes Sets MEMOBUS/Modbus address for PZD3 Write (PPO Write). Values 0 to 2 disable the PZD3 Write.	Default: 0 Min.: 0 Max.: FFFF	–
F7-63 (0783)	PZD4 Write	PZD4 Write	All Modes Sets MEMOBUS/Modbus address for PZD4 Write (PPO Write). Values 0 to 2 disable the PZD4 Write.	Default: 0 Min.: 0 Max.: FFFF	–
F7-64 (0784)	PZD5 Write	PZD5 Write	All Modes Sets MEMOBUS/Modbus address for PZD5 Write (PPO Write). Values 0 to 2 disable the PZD5 Write.	Default: 0 Min.: 0 Max.: FFFF	–
F7-65 (0785)	PZD6 Write	PZD6 Write	All Modes Sets MEMOBUS/Modbus address for PZD6 Write (PPO Write). Values 0 to 2 disable the PZD6 Write.	Default: 0 Min.: 0 Max.: FFFF	–
F7-66 (0786)	PZD7 Write	PZD7 Write	All Modes Sets MEMOBUS/Modbus address for PZD7 Write (PPO Write). Values 0 to 2 disable the PZD7 Write.	Default: 0 Min.: 0 Max.: FFFF	–
F7-67 (0787)	PZD8 Write	PZD8 Write	All Modes Sets MEMOBUS/Modbus address for PZD8 Write (PPO Write). Values 0 to 2 disable the PZD8 Write.	Default: 0 Min.: 0 Max.: FFFF	–
F7-68 (0788)	PZD9 Write	PZD9 Write	All Modes Sets MEMOBUS/Modbus address for PZD9 Write (PPO Write). Values 0 to 2 disable the PZD9 Write.	Default: 0 Min.: 0 Max.: FFFF	–

No. (Addr. Hex)	Name	LCD Display	Description	Values	Page
F7-69 (0789)	PZD10 Write	PZD10 Write	All Modes Sets MEMOBUS/Modbus address for PZD10 Write (PPO Write). Values 0 to 2 disable the PZD10 Write.	Default: 0 Min.: 0 Max.: FFFF	–
F7-70 (078A)	PZD1 Read	PZD1 Read	All Modes Sets MEMOBUS/Modbus address for PZD1 Read (PPO Read). Values 0 to 2 enable the PZD1 Read as ZSW.	Default: 0 Min.: 0 Max.: FFFF	–
F7-71 (078B)	PZD2 Read	PZD2 Read	All Modes Sets MEMOBUS/Modbus address for PZD2 Read (PPO Read). Values 0 to 2 enable the PZD2 Read as HIW.	Default: 0 Min.: 0 Max.: FFFF	–
F7-72 (078C)	PZD3 Read	PZD3 Read	All Modes Sets MEMOBUS/Modbus address for PZD3 Read (PPO Read). Values 0 to 2 disable the PZD3 Read.	Default: 0 Min.: 0 Max.: FFFF	–
F7-73 (078D)	PZD4 Read	PZD4 Read	All Modes Sets MEMOBUS/Modbus address for PZD4 Read (PPO Read). Values 0 to 2 disable the PZD4 Read.	Default: 0 Min.: 0 Max.: FFFF	–
F7-74 (078E)	PZD5 Read	PZD5 Read	All Modes Sets MEMOBUS/Modbus address for PZD5 Read (PPO Read). Values 0 to 2 disable the PZD5 Read.	Default: 0 Min.: 0 Max.: FFFF	–
F7-75 (078F)	PZD6 Read	PZD6 Read	All Modes Sets MEMOBUS/Modbus address for PZD6 Read (PPO Read). Values 0 to 2 disable the PZD6 Read.	Default: 0 Min.: 0 Max.: FFFF	–
F7-76 (0790)	PZD7 Read	PZD7 Read	All Modes Sets MEMOBUS/Modbus address for PZD7 Read (PPO Read). Values 0 to 2 disable the PZD7 Read.	Default: 0 Min.: 0 Max.: FFFF	–
F7-77 (0791)	PZD8 Read	PZD8 Read	All Modes Sets MEMOBUS/Modbus address for PZD8 Read (PPO Read). Values 0 to 2 disable the PZD8 Read.	Default: 0 Min.: 0 Max.: FFFF	–
F7-78 (0792)	PZD9 Read	PZD9 Read	All Modes Sets MEMOBUS/Modbus address for PZD9 Read (PPO Read). Values 0 to 2 disable the PZD9 Read.	Default: 0 Min.: 0 Max.: FFFF	–
F7-79 (0793)	PZD10 Read	PZD10 Read	All Modes Sets MEMOBUS/Modbus address for PZD10 Read (PPO Read). Values 0 to 2 disable the PZD10 Read.	Default: 0 Min.: 0 Max.: FFFF	–

<1> Cycle power for setting changes to take effect.

<2> If F7-13 is set to 0, then all IP Addresses (as defined with parameters F7-01 to F7-04) must be unique.

B.9 H Parameters: Multi-Function Terminals

H parameters assign functions to the multi-function input and output terminals.

◆ H1: Multi-Function Digital Inputs

No. (Addr. Hex)	Name	LCD Display	Description	Values	Page
H1-01 (0438)	Multi-Function Digital Input Terminal S1 Function Selection	Term S1 Func Sel	All Modes Assigns a function to the multi-function digital inputs. Refer to pages 603 to 608 for descriptions of setting values. **Note:** Set unused terminals to F.	Default: 40 (F) <1> Min.: 1 Max.: 9F	298
H1-02 (0439)	Multi-Function Digital Input Terminal S2 Function Selection	Term S2 Func Sel	All Modes Assigns a function to the multi-function digital inputs. Refer to pages 603 to 608 for descriptions of setting values. **Note:** Set unused terminals to F.	Default: 41 (F) <1> Min.: 1 Max.: 9F	298
H1-03 (0400)	Multi-Function Digital Input Terminal S3 Function Selection	Term S3 Func Sel	All Modes Assigns a function to the multi-function digital inputs. Refer to pages 603 to 608 for descriptions of setting values. **Note:** Set unused terminals to F.	Default: 24 Min.: 0 Max.: 9F	298
H1-04 (0401)	Multi-Function Digital Input Terminal S4 Function Selection	Term S4 Func Sel	All Modes Assigns a function to the multi-function digital inputs. Refer to pages 603 to 608 for descriptions of setting values. **Note:** Set unused terminals to F.	Default: 14 Min.: 0 Max.: 9F	298
H1-05 (0402)	Multi-Function Digital Input Terminal S5 Function Selection	Term S5 Func Sel	All Modes Assigns a function to the multi-function digital inputs. Refer to pages 603 to 608 for descriptions of setting values. **Note:** Set unused terminals to F.	Default: 3 (0) <1> Min.: 0 Max.: 9F	298
H1-06 (0403)	Multi-Function Digital Input Terminal S6 Function Selection	Term S6 Func Sel	All Modes Assigns a function to the multi-function digital inputs. Refer to pages 603 to 608 for descriptions of setting values. **Note:** Set unused terminals to F.	Default: 4 (3) <1> Min.: 0 Max.: 9F	298
H1-07 (0404)	Multi-Function Digital Input Terminal S7 Function Selection	Term S7 Func Sel	All Modes Assigns a function to the multi-function digital inputs. Refer to pages 603 to 608 for descriptions of setting values. **Note:** Set unused terminals to F.	Default: 6 (4) <1> Min.: 0 Max.: 9F	298
H1-08 (0405)	Multi-Function Digital Input Terminal S8 Function Selection	Term S8 Func Sel	All Modes Assigns a function to the multi-function digital inputs. Refer to pages 603 to 608 for descriptions of setting values. **Note:** Set unused terminals to F.	Default: 8 Min.: 0 Max.: 9F	298

<1> Value in parenthesis is the default setting when a 3-Wire initialization is performed (A1-03 = 3330).

H1 Multi-Function Digital Input Selections				
H1-□□ Setting	Function	LCD Display	Description	Page
0	3-Wire sequence	3-Wire Control	All Modes Closed: Reverse rotation (only if the drive is set up for 3-Wire sequence) Terminals S1 and S2 are automatically set up for the Run command and Stop command.	299
1	LOCAL/REMOTE selection	Local/Remote Sel	All Modes Open: REMOTE (parameter settings determine the source of the frequency Reference 1 or 2 (b1-01, b1-02 or b1-15, b1-16) Closed: LOCAL, Frequency reference and Run command are input from the digital operator.	299

H1 Multi-Function Digital Input Selections				
H1-□□ Setting	Function	LCD Display	Description	Page
2	External reference 1/2 selection	Ext Ref Sel	All Modes Open: Run command and frequency reference source 1 (determined by b1-01 and b1-02) Closed: Run command and frequency reference source 2 (determined by b1-15 and b1-16)	300
3	Multi-Step Speed Reference 1	Multi-Step Ref 1	All Modes When input terminals are set to Multi-Step Speed References 1 through 3, switching combinations of those terminals will create a multi-step speed sequence using the frequency references set in d1-01 through d1-08.	300
4	Multi-Step Speed Reference 2	Multi-Step Ref 2	All Modes When input terminals are set to Multi-Step Speed References 1 through 3, switching combinations of those terminals will create a multi-step speed sequence using the frequency references set in d1-01 through d1-08.	300
5	Multi-Step Speed Reference 3	Multi-Step Ref 3	All Modes When input terminals are set to Multi-Step Speed References 1 through 3, switching combinations of those terminals will create a multi-step speed sequence using the frequency references set in d1-01 through d1-08.	300
6	Jog reference selection	Jog Freq Ref	All Modes Closed: Jog frequency reference (d1-17) selected. Jog has priority over all other reference sources.	300
7	Accel/decel time selection 1	Multi-Acc/Dec 1	All Modes Used to switch between accel/decel time 1 (set in C1-01, C1-02) and accel/decel time 2 (set in C1-03, C1-04).	300
8	Baseblock command (N.O.)	Ext BaseBlk N.O.	All Modes Closed: No drive output	300
9	Baseblock command (N.C.)	Ext BaseBlk N.C.	All Modes Open: No drive output	300
A	Accel/decel ramp hold	Acc/Dec RampHold	All Modes Open: Accel/decel is not held Closed: The drive pauses during acceleration or deceleration and maintains the output frequency.	300
B	Drive overheat alarm (oH2)	OH2 Alarm Signal	All Modes Closed: Closes when an oH2 alarm occurs	301
C	Analog terminal input selection	Term A2 Enable	All Modes Open: Function assigned by H3-14 is disabled. Closed: Function assigned by H3-14 is enabled.	301
D	PG encoder disable	PG Fdbk Disable	V/f, V/f w PG, OLV, CLV, OLV/PM, AOLV/PM, CLV/PM Open: Speed feedback for V/f Control with PG is enabled. Closed: Speed feedback disabled.	301
E	ASR integral reset	ASR Intgrl Reset	V/f, V/f w PG, OLV, CLV, OLV/PM, AOLV/PM, CLV/PM Open: PI control Closed: Integral reset	301
F	Through mode	Term Not Used	All Modes Select this setting when the terminal is not used or when using the terminal in the pass-through mode. The terminal does not trigger a drive function, but can be used as digital input for the controller to which the drive is connected.	301
10	Up command	Up Command 1	All Modes The drive accelerates when the Up command terminal closes, and decelerates when the Down command closes. When both terminals are closed or both are open, the drive holds the frequency reference. The Up and Down commands must always be used in conjunction with one another.	301

H1 Multi-Function Digital Input Selections				
H1-□□ Setting	Function	LCD Display	Description	Page
11	Down command	Down Command 1	All Modes The drive accelerates when the Up command terminal closes, and decelerates when the Down command closes. When both terminals are closed or both are open, the drive holds the frequency reference. The Up and Down commands must always be used in conjunction with one another.	301
12	Forward Jog	Forward Jog	All Modes Closed: Runs forward at the Jog frequency d1-17.	302
13	Reverse Jog	Reverse Jog	All Modes Closed: Runs reverse at the Jog frequency d1-17.	302
14	Fault reset	Fault Reset	All Modes Closed: Resets faults if the cause is cleared and the Run command is removed.	302
15	Fast Stop (N.O.)	Fast-Stop N.O.	All Modes Closed: Decelerates at the Fast Stop time set to C1-09.	302
16	Motor 2 selection	Motor 2 Select	V/f V/f w PG OLV CLV OLV/PM AOLV/PM CLV/PM Open: Motor 1 (E1-□□, E2-□□) Closed: Motor 2 (E3-□□, E4-□□)	303
17	Fast Stop (N.C.)	Fast-Stop N.C.	All Modes Open: Decelerates to stop at the Fast Stop time set to C1-09.	302
18	Timer function input	Timer function	All Modes Triggers the timer set up by parameters b4-01 and b4-02. Must be set in conjunction with the timer function output (H2-□□ = 12).	303
19	PID disable	PID Disable	All Modes Open: PID control enabled Closed: PID control disabled	304
1A	Accel/decel time selection 2	Multi-Acc/Dec 2	All Modes Used in conjunction with an input terminal set for “Accel/decel time selection 1” (H1-□□ = 7), and allows the drive to switch between accel/decel times 3 and 4.	304
1B	Program lockout	Program Lockout	All Modes Open: Parameters cannot be edited. Closed: Parameters can be edited and saved.	304
1E	Reference sample hold	Ref Sample Hold	All Modes Closed: Samples the analog frequency reference and operates the drive at that speed.	304

H1 Multi-Function Digital Input Selections				
H1-□□ Setting	**Function**	**LCD Display**	**Description**	**Page**
20 to 2F	External fault	20: NO/Always Det, Ramp to Stop 21: NC/Always Det, Ramp to Stop 22: NO/During RUN, Ramp to Stop 23: NC/During RUN, ramp to stop 24: NO/ Always Det, Coast to Stop 25: NC/Always Det, Coast to Stop 26: NO/During RUN, Coast to Stop 27: NC/During RUN, Coast to Stop 28: NO/Always Det, Fast-Stop 29: NC/Always Det, Fast-Stop 2A: NO/During RUN, Fast-Stop 2B: NC/During RUN, Fast- Stop 2C: NO/Always Det, Alarm Only 2D: NC/Always Det, Alarm Only 2E: NO/ During RUN, Alarm Only 2F: NC/During RUN, Alarm Only	All Modes 20: N.O., Always detected, ramp to stop 21: N.C., Always detected, ramp to stop 22: N.O., During run, ramp to stop 23: N.C., During run, ramp to stop 24: N.O., Always detected, coast to stop 25: N.C., Always detected, coast to stop 26: N.O., During run, coast to stop 27: N.C., During run, coast to stop 28: N.O., Always detected, Fast Stop 29: N.C., Always detected, Fast Stop 2A: N.O., During run, Fast Stop 2B: N.C., During run, Fast Stop 2C: N.O., Always detected, alarm only (continue running) 2D: N.C., Always detected, alarm only (continue running) 2E: N.O., During run, alarm only (continue running) 2F: N.C., During run, alarm only (continue running)	*304*
30	PID integral reset	PID Intgrl Reset	All Modes Closed: Resets the PID control integral value.	*305*
31	PID integral hold	PID Intgrl Hold	All Modes Open: Performs integral operation. Closed: Maintains the current PID control integral value.	*305*
32	Multi-Step Speed Reference 4	Multi-Step Ref 4	All Modes Used in combination with input terminals set to Multi-Step Speed Reference 1, 2, and 3. Use parameters d1-09 to d1-16 to set reference values.	*305*
34	PID soft starter cancel	PID SFS Cancel	All Modes Open: PID soft starter is enabled. Closed: Disables the PID soft starter b5-17.	*305*
35	PID input level selection	PID Input Invert	All Modes Closed: Inverts the PID input signal.	*305*
40	Forward run command (2-Wire sequence)	FwdRun 2Wire Seq	All Modes Open: Stop Closed: Forward run **Note:** Cannot be set together with settings 42 or 43.	*305*
41	Reverse run command (2-Wire sequence)	RevRun 2WireSeq	All Modes Open: Stop Closed: Reverse run **Note:** Cannot be set together with settings 42 or 43.	*305*
42	Run command (2-Wire sequence 2)	Run/Stp 2WireSeq	All Modes Open: Stop Closed: Run **Note:** Cannot be set together with settings 40 or 41.	*306*

H1 Multi-Function Digital Input Selections				
H1-□□ Setting	**Function**	**LCD Display**	**Description**	**Page**
43	FWD/REV command (2-Wire sequence 2)	FWD/REV 2WireSeq	**All Modes** Open: Forward Closed: Reverse **Note:** Determines motor direction, but does not issue a Run command. Cannot be set together with settings 40 or 41.	306
44	Offset frequency 1	Offset Freq 1	**All Modes** Closed: Adds d7-01 to the frequency reference.	306
45	Offset frequency 2	Offset Freq 2	**All Modes** Closed: Adds d7-02 to the frequency reference.	306
46	Offset frequency 3	Offset Freq 3	**All Modes** Closed: Adds d7-03 to the frequency reference.	306
47	Node setup	CanOpenNID Setup	**All Modes** Closed: Node setup for SI-S3 enabled.	306
60	DC Injection Braking command	DCInj Activate	**V/f** **V/f w PG** **OLV** **CLV** **OLV/PM** **AOLV/PM** CLV/PM Closed: Triggers DC Injection Braking.	306
61	External Speed Search command 1	Speed Search 1	**V/f** V/f w PG **OLV** CLV **OLV/PM** **AOLV/PM** CLV/PM Closed: Activates Current Detection Speed Search from the maximum output frequency (E1-04).	306
62	External Speed Search command 2	Speed Search 2	**V/f** V/f w PG **OLV** CLV **OLV/PM** **AOLV/PM** CLV/PM Closed: Activates Current Detection Speed Search from the frequency reference.	306
63	Field weakening	Field Weak	**V/f** **V/f w PG** OLV CLV OLV/PM AOLV/PM CLV/PM Closed: The drive performs Field Weakening control as set for d6-01 and d6-02.	306
65	KEB Ride-Thru 1 (N.C.)	KEB Ridethru NC	**All Modes** Open: KEB Ride-Thru 1 enabled.	307
66	KEB Ride-Thru 1 (N.O.)	KEB Ridethru NO	**All Modes** Closed: KEB Ride-Thru 1 enabled.	307
67	Communications test mode	Comm Test Mode	**All Modes** Tests the MEMOBUS/Modbus RS-422/RS-485 interface. Displays “PASS” if the test completes successfully.	307
68	High Slip Braking (HSB)	HighSlipBraking	**V/f** **V/f w PG** OLV CLV OLV/PM AOLV/PM CLV/PM Closed: Activates High Slip Braking to stop the drive during a Run command.	307
6A	Drive enable	Drive Enable	**All Modes** Open: Drive disabled. If this input is opened during run, the drive will stop as specified by b1-03. Closed: Ready for operation.	307
71	Speed/Torque control Sswitch	Spd/Trq Ctl Chng	V/f V/f w PG OLV **CLV** OLV/PM AOLV/PM **CLV/PM** Open: Speed Control Closed: Torque Control	307
72	Zero servo	Zero Servo Cmd	V/f V/f w PG OLV **CLV** OLV/PM AOLV/PM **CLV/PM** Closed: Zero Servo enabled	307

H1 Multi-Function Digital Input Selections				
H1-□□ Setting	Function	LCD Display	Description	Page
75	Up 2 command	Up Command 2	**All Modes** Used to control the bias added to the frequency reference by the Up/Down 2 function. The Up 2 and Down 2 commands must always be used in conjunction with one another.	307
76	Down 2 command	Down Command 2	**All Modes** Used to control the bias added to the frequency reference by the Up/Down 2 function. The Up 2 and Down 2 commands must always be used in conjunction with one another.	307
77	ASR gain switch	ASR Gain Switch	V/f, V/f w PG, OLV, **CLV**, OLV/PM, **AOLV/PM**, **CLV/PM** Open: ASR proportional gain 1 (C5-01) Closed: ASR proportional gain 2 (C5-03)	308
78	External torque reference polarity inversion	Tref Sign Change	V/f, V/f w PG, OLV, **CLV**, OLV/PM, AOLV/PM, **CLV/PM** Open: Forward torque reference. Closed: Reverse polarity.	308
7A	KEB Ride-Thru 2 (N.C.)	KEB Ridethru2NC	**All Modes** Open: KEB Ride-Thru 2 enabled. Drive disregards L2-29 and performs Single Drive KEB Ride-Thru 2.	308
7B	KEB Ride-Thru 2 (N.O.)	KEB Ridethru2NO	**All Modes** Closed: KEB Ride-Thru 2 enabled. Drive disregards L2-29 and performs Single Drive KEB Ride-Thru 2.	308
7C	Short circuit braking (N.O.)	SC Brake (NO)	V/f, V/f w PG, OLV, CLV, **OLV/PM**, **AOLV/PM**, CLV/PM Closed: Short Circuit Braking enabled	308
7D	Short circuit braking (N.C.)	SC Brake (NC)	V/f, V/f w PG, OLV, CLV, **OLV/PM**, **AOLV/PM**, CLV/PM Open: Short Circuit Braking enabled	308
7E	Forward/reverse detection	PG Rotate Rev	**V/f**, **V/f w PG**, OLV, CLV, OLV/PM, AOLV/PM, CLV/PM Open: Forward motor operation detected Closed: Reverse motor operation detected	309
7F	PID Bi-Directional Enable	PID BiDir Enable	**All Modes** Reserved.	–
90 to 97	DriveWorksEZ digital inputs 1 to 8	–	**All Modes** Reserved for DWEZ input functions	309
9F	DriveWorksEZ disable	DWEZ Disable	**All Modes** Open: DWEZ enabled Closed: DWEZ disabled	309

◆ H2: Multi-Function Digital Outputs

No. (Addr. Hex)	Name	LCD Display	Description	Values	Page
H2-01 (040B)	Terminal M1-M2 function selection (relay)	M1-M2 Func Sel	**All Modes** Refer to H2 Multi-Function Digital Output Settings on pages 609 to 612 for descriptions of setting values.	Default: 0 Range: 0 to 192	309
H2-02 (040C)	Terminal M3-M4 function selection (relay)	M3/M4 Func Sel		Default: 1 Range: 0 to 192	309
H2-03 (040D)	Terminal M5-M6 function selection (relay)	M5/M6 Func Sel		Default: 2 Range: 0 to 192	309

No. (Addr. Hex)	Name	LCD Display	Description	Values	Page
H2-06 (0437)	Watt Hour Output Unit Selection	Pwr Mon Unit Sel	All Modes Sets the output units for the watt hours when Watt Hour Pulse Output is selected as the digital output (H2-01, H2-02, or H2-03 = 39). Outputs a 200 ms pulse signal when the watt hour counter increases by the units selected. 0: 0.1 kWh units 1: 1 kWh units 2: 10 kWh units 3: 100 kWh units 4: 1000 kWh units	Default: 0 Range: 0 to 4	320
H2-07 (0B3A) <1>	MEMOBUS Register 1 Address Select	MFDO Regs1 Addr	All Modes Sets the addresses of the MEMOBUS/Modbus registers from which data will be sent to contact outputs 62 and 162. **Note:** This parameter is not available in models 4A0930 and 4A1200.	Default: 1 Range: 1 to 1FFF	320
H2-08 (0B3B) <1>	MEMOBUS Register 1 Bit Select	MFDO Regs1 Bit	All Modes Sets the bits for the MEMOBUS/Modbus registers from which data will be sent to contact outputs 62 and 162. **Note:** This parameter is not available in models 4A0930 and 4A1200.	Default: 0 Range: 0 to FFFF	320
H2-09 (0B3C) <1>	MEMOBUS Register 2 Address Select	MFDO Regs2 Addr	All Modes Sets the addresses of the MEMOBUS/Modbus registers from which data will be sent to contact outputs 63 and 163. **Note:** This parameter is not available in models 4A0930 and 4A1200.	Default: 1 Range: 1 to 1FFF	320
H2-10 (0B3D) <1>	MEMOBUS Register 2 Bit Select	MFDO Regs2 Bit	All Modes Sets the bits for the MEMOBUS/Modbus registers from which data will be sent to contact outputs 63 and 163. **Note:** This parameter is not available in models 4A0930 and 4A1200.	Default: 0 Range: 0 to FFFF	320

<1> Available in drive software versions PRG: 1019 and later.

H2 Multi-Function Digital Output Settings				
H2-□□ Setting	Function	LCD Display	Description	Page
0	During run	During RUN 1	All Modes Closed: A Run command is active or voltage is output.	310
1	Zero speed	Zero Speed	All Modes Open: Output speed is greater than or equal to the value of E1-09 (Minimum Output Frequency) or b2-01 (DC Injection Braking Start Frequency). Closed: Output frequency is less than the value of E1-09 (Minimum Output Frequency) or b2-01 (DC Injection Braking Start Frequency).	310
2	Speed agree 1	Fref/Fout Agree1	All Modes Closed: Output frequency equals the speed reference (plus or minus the hysteresis set to L4-02).	311
3	User-set speed agree 1	Fref/Set Agree 1	All Modes Closed: Output frequency and speed reference equal L4-01 (plus or minus the hysteresis set to L4-02).	311
4	Frequency detection 1	Freq Detect 1	All Modes Closed: Output frequency is less than or equal to the value in L4-01 with hysteresis determined by L4-02.	311
5	Frequency detection 2	Freq Detect 2	All Modes Closed: Output frequency is greater than or equal to the value in L4-01 with hysteresis determined by L4-02.	312

H2 Multi-Function Digital Output Settings				
H2-□□ Setting	Function	LCD Display	Description	Page
6	Drive ready	Drive Ready	All Modes Closed: Power up is complete and the drive is ready to accept a Run command.	312
7	DC bus undervoltage	DC Bus Undervolt	All Modes Closed: DC bus voltage is below the Uv trip level set in L2-05.	313
8	During baseblock (N.O.)	BaseBlk 1	All Modes Closed: Drive has entered the baseblock state (no output voltage).	313
9	Frequency reference source	Ref Source	All Modes Open: External Reference 1 or 2 supplies the frequency reference (set in b1-01 or b1-15). Closed: Digital operator supplies the frequency reference.	313
A	Run command source	Run Cmd Source	All Modes Open: External Reference 1 or 2 supplies the Run command (set in b1-02 or b1-16). Closed: Digital operator supplies the Run command.	313
B	Torque detection 1 (N.O.)	Trq Det 1 N.O.	All Modes Closed: An overtorque or undertorque situation has been detected.	313
C	Frequency reference loss	Loss of Ref	All Modes Closed: Analog frequency reference has been lost. Frequency reference loss is detected when the frequency reference drops below 10% of the reference within 400 ms.	313
D	Braking resistor fault	DB Overheat	All Modes Closed: Braking resistor or transistor is overheated or faulted out. **Note:** This setting is not available in models 4A0930 and 4A1200.	313
E	Fault	Fault	All Modes Closed: Fault occurred (this excludes CPF00 and CPF01).	313
F	Through mode	Not Used	All Modes Select this setting when the terminal is not used or when using the terminal in the pass-through mode.	314
10	Minor fault	Minor Fault	All Modes Closed: An alarm has been triggered, or the IGBTs have reached 90% of their expected life span.	314
11	Fault reset command active	Reset Cmd Active	All Modes Closed: The drive has received a reset command from the multi-function input terminals or from a serial network, or the RESET key on the digital operator has been pressed.	314
12	Timer output	Timer Output	All Modes Closed: Timer output.	314
13	Speed agree 2	Fref/Fout Agree2	All Modes Closed: When drive output frequency equals the frequency reference ±L4-04. **Note:** This setting is not available in models 4A0930 and 4A1200.	314
14	User-set speed agree 2	Fref/Set Agree 2	All Modes Closed: When the drive output frequency is equal to the value in L4-03 ±L4-04.	314
15	Frequency detection 3	Freq Detect 3	All Modes Closed: When the drive output frequency is less than or equal to the value in L4-03 ±L4-04.	315
16	Frequency detection 4	Freq Detect 4	All Modes Closed: When the output frequency is greater than or equal to the value in L4-03 ±L4-04.	315

H2 Multi-Function Digital Output Settings				
H2-□□ Setting	**Function**	**LCD Display**	**Description**	**Page**
17	Torque detection 1 (N.C.)	Trq Det 1 N.C.	**All Modes** Open: Overtorque or undertorque has been detected.	*313*
18	Torque detection 2 (N.O.)	Trq Det 2 N.O.	**All Modes** Closed: Overtorque or undertorque has been detected.	
19	Torque detection 2 (N.C.)	Trq Det 2 N.C.	**All Modes** Open: Overtorque or undertorque has been detected.	*313*
1A	During reverse	Reverse Dir	**All Modes** Closed: Drive is running in the reverse direction.	*316*
1B	During baseblock (N.C.)	BaseBlk 2	**All Modes** Open: Drive has entered the baseblock state (no output voltage).	*316*
1C	Motor 2 selection	Motor 2 Selected	**V/f** **V/f w PG** **OLV** **CLV** OLV/PM AOLV/PM CLV/PM Closed: Motor 2 is selected by a digital input (H1-□□ = 16)	*316*
1D	During regeneration	Regenerating	V/f V/f w PG OLV **CLV** OLV/PM AOLV/PM **CLV/PM** Closed: Motor is regenerating energy into the drive.	*316*
1E	Restart enabled	Dur Flt Restart	**All Modes** Closed: An automatic restart is performed	*316*
1F	Motor overload alarm (oL1)	Overload (OL1)	**All Modes** Closed: oL1 is at 90% of its trip point or greater. An oH3 situation also triggers this alarm.	*317*
20	Drive overheat pre-alarm (oH)	OH Prealarm	**All Modes** Closed: Heatsink temperature exceeds the parameter L8-02 value.	*317*
22	Mechanical weakening detection	MechFatigue(OL5)	**All Modes** Closed: Mechanical weakening detected.	*317*
2F	Maintenance period	Maintenance	**All Modes** Closed: Cooling fan, electrolytic capacitors, IGBTs, or the soft charge bypass relay may require maintenance.	*317*
30	During torque limit	Torque Limit	V/f V/f w PG **OLV** **CLV** OLV/PM **AOLV/PM** **CLV/PM** Closed: When the torque limit has been reached.	*317*
31	During speed limit	Speed Limit	V/f V/f w PG OLV **CLV** OLV/PM AOLV/PM **CLV/PM** Closed: Speed limit has been reached.	*317*
32	During speed limit in Torque Control	Spd Lim @ T Cont	V/f V/f w PG OLV **CLV** OLV/PM AOLV/PM **CLV/PM** Closed: Speed limit has been reached while using Torque Control.	*317*
33	Zero Servo complete	Zero Servo End	V/f V/f w PG OLV **CLV** OLV/PM AOLV/PM **CLV/PM** Closed: Zero Servo operation has finished.	*317*
37	During frequency output	During RUN 2	**All Modes** Open: No frequency output from drive if stopped with baseblock, DC injection braking during initial excitation, or short-circuit braking. Closed: Drive is outputting a frequency.	*317*
38	Drive enabled	Drive Enable	**All Modes** Closed: Multi-function input set for “Drive enable” is closed (H1-□□ = 6A)	*318*
39	Watt hour pulse output	Watt-hour Pulse	**All Modes** Output units are determined by H2-06. Outputs a pulse every 200 ms to indicate the kWh count.	*318*

H2 Multi-Function Digital Output Settings				
H2-□□ Setting	**Function**	**LCD Display**	**Description**	**Page**
3C	LOCAL/REMOTE status	Local	**All Modes** Open: REMOTE Closed: LOCAL	318
3D	During speed search	During SpdSrch	**All Modes** Closed: Speed Search is being executed.	318
3E	PID feedback low	PID Feedback Low	**All Modes** Closed: PID feedback level is too low.	318
3F	PID feedback high	PID FeedbackHigh	**All Modes** Closed: The PID feedback level is too high.	318
4A	During KEB Ride-Thru	During KEB	**All Modes** Closed: KEB Ride-Thru is being performed.	318
4B	During short circuit braking	During SC Brake	V/f, V/f w PG, OLV, CLV, **OLV/PM**, **AOLV/PM**, CLV/PM Closed: Short Circuit Braking is active.	318
4C	During fast stop	During Fast Stop	**All Modes** Closed: A Fast Stop command has been entered from the operator or input terminals.	318
4D	oH Pre-alarm time limit	OH Pre-Alarm	**All Modes** Closed: oH pre-alarm time limit has passed.	318
4E	Braking transistor fault (rr)	Brk Trans Fault	**All Modes** Closed: The built-in dynamic braking transistor failed. **Note:** This setting is not available in models 2A0169 to 2A0415 and 4A0088 to 4A1200.	318
4F	Braking resistor overheat (oH)	BrkResistOvHeat	**All Modes** Closed: The dynamic braking resistor has overheated. **Note:** This setting is not available in models 2A0169 to 2A0415 and 4A0088 to 4A1200.	318
60	Internal cooling fan alarm	Fan Alrm Det	**All Modes** Closed: Internal cooling fan alarm	319
61	Rotor position detection complete	RotPosDetCmpIt	V/f, V/f w PG, OLV, CLV, OLV/PM, **AOLV/PM**, **CLV/PM** Closed: Drive has successfully detected the rotor position of the PM motor.	319
62 <1>	MEMOBUS Register 1 (Selected with H2-07 and H2-08)	Memobus Regs1	**All Modes** The contact output is closed when any of the bits specified by H2-08 for the MEMOBUS/Modbus register address set in H2-07 turn on. **Note:** This setting is not available in models 4A0930 and 4A1200.	319
63 <1>	MEMOBUS Register 2 (Selected with H2-09 and H2-10)	Memobus Regs2	**All Modes** The contact output is closed when any of the bits specified by H2-10 for the MEMOBUS/Modbus register address set in H2-09 turn on. **Note:** This setting is not available in models 4A0930 and 4A1200.	319
90 to 92	DriveWorksEZ digital outputs 1 to 3	–	**All Modes** Reserved for DWEZ digital output functions.	319
100 to 192	Function 0 to 92 with inverse output	!Function	**All Modes** Inverts the output switching of the multi-function output functions. Set the last two digits of 1□□ to reverse the output signal of that specific function.	319

<1> Available in drive software versions PRG: 1019 and later.

◆ H3: Multi-Function Analog Inputs

No. (Addr. Hex)	Name	LCD Display	Description	Values	Page
H3-01 (0410)	Terminal A1 Signal Level Selection	Term A1 Level 0: 0-10V, (LowLim=0) 1: 0-10V, (BipolRef)	All Modes 0: 0 to 10 V 1: -10 to 10 V	Default: 0 Range: 0, 1	320
H3-02 (0434)	Terminal A1 Function Selection	Term A1 FuncSel	All Modes Sets the function of terminal A1.	Default: 0 Range: 0 to 32	321
H3-03 (0411) RUN	Terminal A1 Gain Setting	Terminal A1 Gain	All Modes Sets the level of the input value selected in H3-02 when 10 V is input at terminal A1.	Default: 100.0% Min.: -999.9 Max.: 999.9	321
H3-04 (0412) RUN	Terminal A1 Bias Setting	Terminal A1 Bias	All Modes Sets the level of the input value selected in H3-02 when 0 V is input at terminal A1.	Default: 0.0% Min.: -999.9 Max.: 999.9	321
H3-05 (0413)	Terminal A3 Signal Level Selection	Term A3 Signal 0: 0-10V (LowLim=0) 1: 0-10V, (BipolRef)	All Modes 0: 0 to 10 V 1: -10 to 10 V	Default: 0 Range: 0, 1	321
H3-06 (0414)	Terminal A3 Function Selection	Terminal A3 Sel	All Modes Sets the function of terminal A3.	Default: 2 Range: 0 to 32	321
H3-07 (0415) RUN	Terminal A3 Gain Setting	Terminal A3 Gain	All Modes Sets the level of the input value selected in H3-06 when 10 V is input at terminal A3.	Default: 100.0% Min.: -999.9 Max.: 999.9	322
H3-08 (0416) RUN	Terminal A3 Bias Setting	Terminal A3 Bias	All Modes Sets the level of the input value selected in H3-06 when 0 V is input at terminal A3.	Default: 0.0% Min.: -999.9 Max.: 999.9	322
H3-09 (0417)	Terminal A2 Signal Level Selection	Term A2 Level	All Modes 0: 0 to 10 V 1: -10 to 10 V 2: 4 to 20 mA 3: 0 to 20 mA **Note:** Use DIP switch S1 to set input terminal A2 for a current or a voltage input signal.	Default: 2 Range: 0 to 3	322
H3-10 (0418)	Terminal A2 Function Selection	Term A2 FuncSel	All Modes Sets the function of terminal A2.	Default: 0 Range: 0 to 32	322
H3-11 (0419) RUN	Terminal A2 Gain Setting	Terminal A2 Gain	All Modes Sets the level of the input value selected in H3-10 when 10 V (20 mA) is input at terminal A2.	Default: 100.0% Min.: -999.9 Max.: 999.9	322
H3-12 (041A) RUN	Terminal A2 Bias Setting	Terminal A2 Bias	All Modes Sets the level of the input value selected in H3-10 when 0 V (0 or 4 mA) is input at terminal A2.	Default: 0.0% Min.: -999.9 Max.: 999.9	322
H3-13 (041B)	Analog Input Filter Time Constant	A1/A2 Filter T	All Modes Sets a primary delay filter time constant for terminals A1, A2, and A3. Used for noise filtering.	Default: 0.03 s Min.: 0.00 Max.: 2.00	323
H3-14 (041C)	Analog Input Terminal Enable Selection	A1/A2/A3 Sel 1: A1 Available 2: A2 Available 3: A1/A2 Available 4: A3 Available 5: A1/A3 Available 6: A2/A3 Available 7: All Available	All Modes Determines which analog input terminals will be enabled or disabled when a digital input programmed for "Analog input enable" (H1-□□ = C) is activated. The terminals not set as the target are not influenced by input signals. 1: Terminal A1 only 2: Terminal A2 only 3: Terminals A1 and A2 only 4: Terminal A3 only 5: Terminals A1 and A3 6: Terminals A2 and A3 7: All terminals enabled	Default: 7 Range: 1 to 7	323

No. (Addr. Hex)	Name	LCD Display	Description	Values	Page
H3-16 (02F0)	Terminal A1 Offset	TerminalA1Offset	All Modes Adds an offset when the analog signal to terminal A1 is at 0 V.	Default: 0 Min.: -500 Max.: 500	324
H3-17 (02F1)	Terminal A2 Offset	TerminalA2Offset	All Modes Adds an offset when the analog signal to terminal A2 is at 0 V.	Default: 0 Min.: -500 Max.: 500	324
H3-18 (02F2)	Terminal A3 Offset	TerminalA3Offset	All Modes Adds an offset when the analog signal to terminal A3 is at 0 V.	Default: 0 Min.: -500 Max.: 500	324

H3 Multi-Function Analog Input Settings				
H3-□□ Setting	Function	LCD Display	Description When Output Is 100%	Page
0	Frequency bias	Freq Ref Bias	All Modes 10 V = E1-04 (maximum output frequency)	324
1	Frequency gain	Freq Ref Gain	All Modes 0 to 10 V signal allows a setting of 0 to 100%. -10 to 0 V signal allows a setting of -100 to 0%.	324
2	Auxiliary frequency reference 1	Aux Reference1	All Modes 10 V = E1-04 (maximum output frequency)	324
3	Auxiliary frequency reference 2	Aux Reference2	All Modes 10 V = E1-04 (maximum output frequency)	324
4	Output voltage bias	Voltage Bias	V/f, V/f w PG, OLV, CLV, OLV/PM, AOLV/PM, CLV/PM 10 V = E1-05 (motor rated voltage)	324
5	Accel/decel time gain	Acc/DecTime Gain	All Modes 10 V = 100%	324
6	DC Injection Braking current	DC Brake Current	V/f, V/f w PG, OLV, CLV, OLV/PM, AOLV/PM, CLV/PM 10 V = Drive rated current	324
7	Overtorque/ undertorque detection level	Torque Det Level	All Modes 10 V = Drive rated current (V/f, V/f w PG) 10 V = Motor rated torque (OLV, CLV, OLV/PM, AOLV/PM, CLV/PM)	325
8	Stall Prevention level during run	Stall Prev Level	V/f, V/f w PG, OLV, CLV, OLV/PM, AOLV/PM, CLV/PM 10 V = Drive rated current	325
9	Output frequency lower limit level	Ref Lower Limit	All Modes 10 V = E1-04 (maximum output frequency)	325
B	PID feedback	PID Feedback1	All Modes 10 V = 100%	325
C	PID setpoint	PID Set Point	All Modes 10 V = 100%	325
D	Frequency bias	Freq Ref Bias 2	All Modes 10 V = E1-04 (maximum output frequency)	325
E	Motor temperature (PTC input)	Motor PTC	All Modes 10 V = 100%	325
F	Through mode	Not Used	All Modes Select this setting when the terminal is not used or when using the terminal in the pass-through mode.	325
10	Forward torque limit	Fwd Torque Limit	V/f, V/f w PG, OLV, CLV, OLV/PM, AOLV/PM, CLV/PM 10 V = Motor rated torque	325

H3 Multi-Function Analog Input Settings				
H3-□□ Setting	Function	LCD Display	Description When Output Is 100%	Page
11	Reverse torque limit	Rev Torque Limit	V/f V/f w PG OLV CLV OLV/PM AOLV/PM CLV/PM 10 V = Motor rated torque	325
12	Regenerative torque limit	Regen Torq Limit	V/f V/f w PG OLV CLV OLV/PM AOLV/PM CLV/PM 10 V = Motor rated torque	325
13	Torque Limit Using Torque Reference/ Speed Control	Torque Reference	V/f V/f w PG OLV CLV OLV/PM AOLV/PM CLV/PM 10 V = Motor rated torque	326
14	Torque compensation	Torque Comp	V/f V/f w PG OLV CLV OLV/PM AOLV/PM CLV/PM 10 V = Motor rated torque	326
15	General torque limit	Torque Limit	V/f V/f w PG OLV CLV OLV/PM AOLV/PM CLV/PM 10 V = Motor rated torque	325
16	Differential PID feedback	PID Feedback 2	All Modes 10 V = 100%	326
17	Motor Thermistor (NTC)	Moter temp (NTC)	All Modes 10 V = -9 °C 0 V = +234 °C **Note:** This setting is only available in models 4A0930 and 4A1200.	326
1F	Through mode	Not Used	All Modes Select this setting when the terminal is not used or when using the terminal in the pass-through mode.	325
30 to 32	DriveWorksEZ analog input 1 to 3	–	All Modes Output is determined by the function selected using DWEZ.	326

◆ H4: Analog Outputs

No. (Addr. Hex)	Name	LCD Display	Description	Values	Page
H4-01 (041D)	Multi-Function Analog Output Terminal FM Monitor Selection	Term FM FuncSel	All Modes Selects the data to be output through multi-function analog output terminal FM. Set the desired monitor parameter to the digits available in U□-□□. For example, enter “103” for U1-03.	Default: 102 Range: 000 to 999	326
H4-02 (041E) RUN	Multi-Function Analog Output Terminal FM Gain	Terminal FM Gain	All Modes Sets the signal level at terminal FM that is equal to 100% of the selected monitor value.	Default: 100.0% Min.: -999.9 Max.: 999.9	326
H4-03 (041F) RUN	Multi-Function Analog Output Terminal FM Bias	Terminal FM Bias	All Modes Sets the signal level at terminal FM that is equal to 0% of the selected monitor value.	Default: 0.0% Min.: -999.9 Max.: 999.9	326
H4-04 (0420)	Multi-Function Analog Output Terminal AM Monitor Selection	Terminal AM Sel	All Modes Selects the data to be output through multi-function analog output terminal AM. Set the desired monitor parameter to the digits available in U□-□□. For example, enter “103” for U1-03.	Default: 103 Range: 000 to 999	326
H4-05 (0421) RUN	Multi-Function Analog Output Terminal AM Gain	Terminal AM Gain	All Modes Sets the signal level at terminal AM that is equal to 100% of the selected monitor value.	Default: 50.0% Min.: -999.9 Max.: 999.9	326

No. (Addr. Hex)	Name	LCD Display	Description	Values	Page
H4-06 (0422) RUN	Multi-Function Analog Output Terminal AM Bias	Terminal AM Bias	All Modes Sets the signal level at terminal AM that is equal to 0% of the selected monitor value.	Default: 0.0% Min.: -999.9 Max.: 999.9	326
H4-07 (0423)	Multi-Function Analog Output Terminal FM Signal Level Selection	Term FM Lvl Sel 0: 0-10 VDC 1: -10 +10 VDC 2: 4-20 mA	All Modes 0: 0 to 10 V 1: -10 to 10 V 2: 4 to 20 mA	Default: 0 Range: 0 to 2	327
H4-08 (0424)	Multi-Function Analog Output Terminal AM Signal Level Selection	Term AM Lvl Sel 0: 0-10 VDC 1: -10 +10 VDC 2: 4-20 mA	All Modes 0: 0 to 10 V 1: -10 to 10 V 2: 4 to 20 mA	Default: 0 Range: 0 to 2	327

◆ H5: MEMOBUS/Modbus Serial Communication

Note: Restart the drive to enable MEMOBUS/Modbus communication settings.

No. (Addr. Hex)	Name	LCD Display	Description	Values	Page
H5-01 (0425) <1>	Drive Node Address	Serial Comm Adr	All Modes Selects drive station node number (address) for MEMOBUS/Modbus terminals R+, R-, S+, S-. Cycle power for the setting to take effect.	Default: 1F (Hex) Min.: 0 Max.: FF	707
H5-02 (0426)	Communication Speed Selection	Serial Baud Rate 0: 1200 bps 1: 2400 bps 2: 4800 bps 3: 9600 bps 4: 19.2 kbps 5: 38.4 kbps 6: 57.6 kbps 7: 76.8 kbps 8: 115.2 kbps	All Modes 0: 1200 bps 1: 2400 bps 2: 4800 bps 3: 9600 bps 4: 19200 bps 5: 38400 bps 6: 57600 bps 7: 76800 bps 8: 115200 bps **Note:** Cycle power for the setting to take effect.	Default: 3 Range: 0 to 8	707
H5-03 (0427)	Communication Parity Selection	Serial Com Sel 0: No Parity 1: Even Parity 2: Odd Parity	All Modes 0: No parity 1: Even parity 2: Odd parity **Note:** Cycle power for the setting to take effect.	Default: 0 Range: 0 to 2	707
H5-04 (0428)	Stopping Method after Communication Error (CE)	Serial Fault Sel 0: Ramp to Stop 1: Coast to Stop 2: Fast-Stop 3: Alarm Only	All Modes 0: Ramp to stop 1: Coast to stop 2: Fast Stop 3: Alarm only	Default: 3 Range: 0 to 3	708
H5-05 (0429)	Communication Fault Detection Selection	Serial Flt Dtct 0: Disabled 1: Enabled	All Modes 0: Disabled 1: Enabled. If communication is lost for more than two seconds, a CE fault will occur.	Default: 1 Range: 0, 1	708
H5-06 (042A)	Drive Transmit Wait Time	Transmit WaitTIM	All Modes Set the wait time between receiving and sending data. **Note:** Cycle power for the setting to take effect.	Default: 5 ms Min.: 5 Max.: 65	708
H5-07 (042B)	RTS Control Selection	RTS Control Sel 0: Disabled 1: Enabled	All Modes 0: Disabled. RTS is always on. 1: Enabled. RTS turns on only when sending. **Note:** Cycle power for the setting to take effect.	Default: 1 Range: 0, 1	708
H5-09 (0435)	CE Detection Time	CE Detect Time	All Modes Sets the time required to detect a communications error. Adjustment may be needed when networking several drives.	Default: 2.0 s Min.: 0.0 Max.: 10.0	708

No. (Addr. Hex)	Name	LCD Display	Description	Values	Page
H5-10 (0436)	Unit Selection for MEMOBUS/Modbus Register 0025H	CommReg 25h Unit 0: 0.1 V 1: 1 V	All Modes 0: 0.1 V units 1: 1 V units	Default: 0 Range: 0, 1	709
H5-11 (043C)	Communications ENTER Function Selection	Enter CommandSel 0: Enter Required 1: No EnterRequired	All Modes 0: Drive requires an Enter command before accepting any changes to parameter settings. 1: Parameter changes are activated immediately without the Enter command (same as V7).	Default: 0 Range: 0, 1	709
H5-12 (043D)	Run Command Method Selection	Run CommandSel 0: FWD Run &REV Run 1: Run & FWD/REV	All Modes 0: FWD/Stop, REV/Stop 1: Run/Stop, FWD/REV	Default: 0 Range: 0, 1	709
H5-17 (11A1) <2>	Operation Selection when Unable to Write into EEPROM	Busy Enter Sel 0: No ROM Enter 1: RAM Enter	All Modes Selects operation when an attempt is made to write data into EEPROM via MEMOBUS/Modbus communications and writing into EEPROM is not possible. There is normally no need to change this parameter from the default value 0: Cannot write into EEPROM 1: Write in RAM only	Default: 0 Range: 0, 1	709
H5-18 (11A2) <3>	Filter Time Constant for Motor Speed Monitoring	MtrSpd Monitor T	All Modes Sets the filter time constant for monitoring the motor speed from MEMOBUS/Modbus communications and communication options. Applicable MEMOBUS/Modbus registers are: 3EH, 3FH, 44H, ACH, and ADH **Note:** Parameter is not available in models 4A0930 and 4A1200.	Default: 0 ms Min.: 0 Max.: 100	709

<1> If this parameter is set to 0, the drive will be unable to respond to MEMOBUS/Modbus commands.

<2> Available in drive software versions PRG: 1018 and later.

<3> Available in drive software versions PRG: 1019 and later.

◆ H6: Pulse Train Input/Output

No. (Addr. Hex)	Name	LCD Display	Description	Values	Page
H6-01 (042C)	Pulse Train Input Terminal RP Function Selection	Term RP Func Sel 0: Frequency Ref 1: PID Feedback 2: PID Set Point 3: PG Feedback	All Modes 0: Frequency reference 1: PID feedback value 2: PID setpoint value 3: V/f Control with Simple PG feedback (possible only when using motor 1 in V/f Control)	Default: 0 Range: 0 to 3	328
H6-02 (042D) RUN	Pulse Train Input Scaling	Term RP Scaling	All Modes Sets the terminal RP input signal frequency that is equal to 100% of the value selected in H6-01.	Default: 1440 Hz Min.: 100 Max.: 32000	329
H6-03 (042E) RUN	Pulse Train Input Gain	Terminal RP Gain	All Modes Sets the level of the value selected in H6-01 when a frequency with the value set in H6-02 is input.	Default: 100.0% Min.: 0.0 Max.: 1000.0	329
H6-04 (042F) RUN	Pulse Train Input Bias	Terminal RP Bias	All Modes Sets the level of the value selected in H6-01 when 0 Hz is input.	Default: 0.0% Min.: -100.0 Max.: 100.0	329
H6-05 (0430) RUN	Pulse Train Input Filter Time	Term RP Flt Time	All Modes Sets the pulse train input filter time constant.	Default: 0.10 s Min.: 0.00 Max.: 2.00	329
H6-06 (0431) RUN	Pulse Train Monitor Selection	Term MP Func Sel	All Modes Select the pulse train monitor output function (value of the □-□□ part of U□-□□). For example, enter “501” for U5-01.	Default: 102 Range: 000 to 809	330

No. (Addr. Hex)	Name	LCD Display	Description	Values	Page
H6-07 (0432) RUN	Pulse Train Monitor Scaling	Term RP Scaling	All Modes Sets the terminal MP output signal frequency when the monitor value is 100%. For example, to have the pulse train monitor output equal the output frequency, set H6-06 to 102 and H6-07 to 0.	Default: 1440 Hz Min.: 0 Max.: 32000	330
H6-08 (043F)	Pulse Train Input Minimum Frequency	MP Lower Limit	All Modes Sets the minimum frequency for the pulse train input to be detected. Enabled when H6-01 = 0, 1, or 2.	Default: 0.5 Hz Min.: 0.1 Max.: 1000.0	330

B.10 L: Protection Function

L parameters provide protection to the drive and motor, including control during momentary power loss, stall prevention, frequency detection, fault restarts, overtorque and undertorque detection, and other types of hardware protection.

◆ L1: Motor Protection

No. (Addr. Hex)	Name	LCD Display	Description	Values	Page
L1-01 (0480)	Motor Overload Protection Selection	Mtr OL Charact 0: OL1 Disabled 1: VT Motor 2: CT Motor 3: Vector Motor 4: PM Motor 5: Constant Torque 6: 50Hz VT Motor	All Modes 0: Disabled 1: General purpose motor (standard fan cooled) 2: Drive dedicated motor with a speed range of 1:10 3: Vector motor with a speed range of 1:100 4: PM motor with variable torque 5: PM motor with constant torque control 6: General purpose motor (50 Hz) The drive may not be able to provide protection when using multiple motors, even if overload is enabled in L1-01. Set L1-01 to 0 and install separate thermal relays to each motor.	Default: <1> Range: 0 to 6	331
L1-02 (0481)	Motor Overload Protection Time	MOL Time Const	All Modes Sets the motor thermal overload protection (oL1) time.	Default: 1.0 min Min.: 0.1 Max.: 5.0	333
L1-03 (0482)	Motor Overheat Alarm Operation Selection (PTC input)	Mtr OH Alarm Sel 0 : Ramp to Stop 1: Coast to Stop 2: Fast-Stop 3: Alarm only	All Modes Sets operation when the motor temperature analog input (H3-02, H3-10, or H3-06 = E) exceeds the oH3 alarm level. 0: Ramp to stop 1: Coast to stop 2: Fast Stop (decelerate to stop using the deceleration time in C1-09) 3: Alarm only (“oH3” will flash)	Default: 3 Range: 0 to 3	335
L1-04 (0483)	Motor Overheat Fault Operation Selection (PTC input)	Mtr OH Fault Sel 0 : Ramp to Stop 1: Coast to Stop 2: Fast-Stop	All Modes Sets stopping method when the motor temperature analog input (H3-02, H3-10, or H3-06 = E) exceeds the oH4 fault level. 0: Ramp to stop 1: Coast to stop 2: Fast Stop (decelerate to stop using the deceleration time in C1-09)	Default: 1 Range: 0 to 2	335
L1-05 (0484)	Motor Temperature Input Filter Time (PTC input)	Mtr Temp Filter	All Modes Adjusts the filter for the motor temperature analog input (H3-02, H3-10, or H3-06 = E).	Default: 0.20 s Min.: 0.00 Max.: 10.00	335
L1-08 (1103) <2>	oL1 Current Level	OL1 current lvl1	All Modes Sets the reference current for motor thermal overload detection for motor 1 in amperes. **Note:** This parameter is not available in models 4A0930 and 4A1200.	Default: 0.0 A Min.: 10% of drive rated current Max.: 150% of drive rated current <3>	336
L1-09 (1104) <2>	oL1 Current Level for Motor 2	OL1 current lvl2	V/f V/f w PG OLV CLV OLV/PM AOLV/PM CLV/PM Sets the reference current for motor thermal overload detection for motor 2 in amperes. **Note:** This parameter is not available in models 4A0930 and 4A1200.	Default: 0.0 A Min.: 10% of drive rated current Max.: 150% of drive rated current <3>	336
L1-13 (046D)	Continuous Electrothermal Operation Selection	Mtr OL Mem Sel 0: Disabled 1: Enabled	All Modes 0: Disabled 1: Enabled	Default: 1 Range: 0, 1	336

No. (Addr. Hex)	Name	LCD Display	Description	Values	Page
L1-15 (0440)	Motor 1 Thermistor Selection (NTC)	M1 OH5 Fault Sel	All Modes 0: Disabled 1: Enabled **Note:** This parameter is only available in models 4A0930 and 4A1200.	Default: 0 Range: 0, 1	337
L1-16 (0441)	Motor 1 Overheat Temperature	M1 OH5 level	All Modes Sets the temperature for motor 1 that triggers an overheat fault (oH5). **Note:** This parameter is only available in models 4A0930 and 4A1200.	Default: 120 °C Min.: 50 Max.: 200	337
L1-17 (0442)	Motor 2 Thermistor Selection (NTC)	M2 OH5 Fault Sel	All Modes 0: Disabled 1: Enabled **Note:** This parameter is only available in models 4A0930 and 4A1200.	Default: 0 Range: 0, 1	337
L1-18 (0443)	Motor 2 Overheat Temperature	M2 OH5 level	All Modes Sets the temperature for motor 1 that triggers an overheat fault (oH5). **Note:** This parameter is only available in models 4A0930 and 4A1200.	Default: 120 °C Min.: 50 Max.: 200	338
L1-19 (0444)	Operation at Thermistor Disconnect (THo) (NTC)	Tho Stop sel	All Modes Determines drive response when a thermistor disconnect fault (THo) occurs. 0: Ramp to stop 1: Coast to stop 2: Fast Stop (decelerate to stop using the deceleration time set to C1-09) 3: Alarm only (“THo” will flash) **Note:** This parameter is only available in models 4A0930 and 4A1200.	Default: 3 Range: 0 to 3	338
L1-20 (0445)	Operation at Motor Overheat (oH5)	OH5 Stop sel	All Modes Determines drive response when a motor overheat fault (oH5) occurs. 0: Ramp to stop 1: Coast to stop 2: Fast Stop (decelerate to stop using the deceleration time set to C1-09) 3: Alarm only (“oH5” will flash) **Note:** This parameter is only available in models 4A0930 and 4A1200.	Default: 1 Range: 0 to 3	338

<1> Default setting is determined by parameter A1-02, Control Method Selection.

<2> Available in drive software versions PRG: 1019 and later.

<3> Display is in the following units:
2A0004 to 2A0040, 4A0002 to 4A0023, and 5A0007 to 5A0017: 0.01 A units.
2A0056 to 2A0415, 4A0031 to 4A0675, and 5A0022 to 5A0242: 0.1 A units.

◆ L2: Momentary Power Loss Ride-Thru

No. (Addr. Hex)	Name	LCD Display	Description	Values	Page
L2-01 (0485)	Momentary Power Loss Operation Selection	PwrL Selection 0: Disabled 1: Enbl with Timer 2: Enbl whl CPU act 3: KEB Mode 4: KEB Stop Mode 5: KEB Decel to Stp	All Modes 0: Disabled. Drive trips on Uv1 fault when power is lost. 1: Recover within the time set in L2-02. Uv1 will be detected if power loss is longer than L2-02. 2: Recover as long as CPU has power. Uv1 is not detected. 3: KEB deceleration for the time set to L2-02. 4: KEB deceleration as long as CPU has power. 5: KEB deceleration to stop.	Default: 0 Range: 0 to 5	338
L2-02 (0486)	Momentary Power Loss Ride-Thru Time	PwrL Ridethru t	All Modes Sets the Power Loss Ride-Thru time. Enabled only when L2-01 = 1 or 3.	Default: <1> Min.: 0.0 s Max.: 25.5 s	344
L2-03 (0487)	Momentary Power Loss Minimum Baseblock Time	PwrL Baseblock t	All Modes Sets the minimum wait time for residual motor voltage decay before the drive output reenergizes after performing Power Loss Ride-Thru. Increasing the time set to L2-03 may help if overcurrent or overvoltage occur during Speed Search or during DC Injection Braking.	Default: <1> Min.: 0.1 s Max.: 5.0 s	344
L2-04 (0488)	Momentary Power Loss Voltage Recovery Ramp Time	PwrL V/F Ramp t	V/f, V/f w PG, OLV, CLV OLV/PM, AOLV/PM, CLV/PM Sets the time for the output voltage to return to the preset V/f pattern during Speed Search.	Default: <1> Min.: 0.0 s Max.: 5.0 s	344
L2-05 (0489)	Undervoltage Detection Level (Uv1)	PUV Det Level	All Modes Sets the DC bus undervoltage trip level.	Default: 190 Vdc <2> <3> Min.: 150 Vdc Max.: 210 Vdc <3>	344
L2-06 (048A)	KEB Deceleration Time	KEB Decel Time	All Modes Sets the time required to decelerate from the speed when KEB was activated to zero speed.	Default: 0.00 s Min.: 0.00 Max.: 6000.0 <4>	344
L2-07 (048B)	KEB Acceleration Time	KEB Accel Time	All Modes Sets the time to accelerate to the frequency reference when momentary power loss is over. If set to 0.0, the active acceleration time (C1-01, C1-03, C1-05, or C1-07) is used.	Default: 0.00 s Min.: 0.00 Max.: 6000.0 <4>	345
L2-08 (048C)	Frequency Gain at KEB Start	KEB Freq Red	V/f, V/f w PG, OLV, CLV OLV/PM, AOLV/PM, CLV/PM Sets the percentage of output frequency reduction at the beginning of deceleration when the KEB Ride-Thru function is started. Reduction = (slip frequency before KEB) × (L2-08/100) × 2	Default: 100% Min.: 0 Max.: 300	345
L2-10 (048E)	KEB Detection Time (Minimum KEB Time)	KEB Detect Time	All Modes Sets the time to perform KEB Ride-Thru.	Default: 50 ms Min.: 0 Max.: 2000	345
L2-11 (0461)	DC Bus Voltage Setpoint during KEB	KEB DC Bus Level	All Modes Sets the desired value of the DC bus voltage during KEB Ride-Thru.	Default: <2> Min.: 150 Vdc Max.: 400 Vdc <5>	345
L2-29 (0475)	KEB Method Selection	KEB Mode Sel 0: Single Mode KEB1 1: Single Mode KEB2 2: System Mode KEB1 3: System Mode KEB2	All Modes 0: Single Drive KEB Ride-Thru 1 1: Single Drive KEB Ride-Thru 2 2: System KEB Ride-Thru 1 3: System KEB Ride-Thru 2	Default: 0 Range: 0 to 3	345

<1> Default setting is determined by parameters C6-01, Drive Duty Selection, and o2-04, Drive Model Selection.

<2> Default setting is determined by parameter E1-01, Input voltage Setting.

<3> Values shown are specific to 200 V class drives. Double the value for 400 V class drives. Multiply the value by 2.875 for 600 V class drives.

<4> Setting range value is dependent on parameter C1-10, Accel/Decel Time Setting Units. When C1-10 = 0 (units of 0.01 seconds), the setting range becomes 0.00 to 600.00 seconds.

<5> Values shown are specific to 200 V class drives. Double the value for 400 V class drives. Multiply the value by 2.875 for 600 V class drives, but set the value below 1040 Vdc (overvoltage protection level).

◆ L3: Stall Prevention

No. (Addr. Hex)	Name	LCD Display	Description	Values	Page
L3-01 (048F)	Stall Prevention Selection during Acceleration	StallP Accel Sel 0: Disabled 1: General Purpose 2: Intelligent	**V/f** **V/f w PG** **OLV** CLV **OLV/PM** AOLV/PM CLV/PM 0: Disabled. 1: General purpose. Acceleration is paused as long as the current is above the L3-02 setting. 2: Intelligent. Accelerate in the shortest possible time without exceeding the L3-02 level. **Note:** Setting 2 is not available when using OLV/PM.	Default: 1 Range: 0 to 2	*346*
L3-02 (0490)	Stall Prevention Level during Acceleration	StallP Accel Lvl	**V/f** **V/f w PG** **OLV** CLV **OLV/PM** AOLV/PM CLV/PM Used when L3-01 = 1 or 2. 100% is equal to the drive rated current.	Default: <1> Min.: 0% Max.: 150% <1>	*347*
L3-03 (0491)	Stall Prevention Limit during Acceleration	StallPAcc LowLim	**V/f** **V/f w PG** **OLV** CLV **OLV/PM** AOLV/PM CLV/PM Sets Stall Prevention lower limit during acceleration when operating in the constant power range. Set as a percentage of drive rated current.	Default: 50% Min.: 0 Max.: 100	*347*
L3-04 (0492)	Stall Prevention Selection during Deceleration	StallP Decel Sel 0: Disabled 1: General Purpose 2: Intelligent 3: StallP +Resistor 4: High Flux Brake 5: High Flux Brake2	**All Modes** 0: Disabled. Deceleration at the active deceleration rate. An ov fault may occur. 1: General purpose. Deceleration is paused when the DC bus voltage exceeds the Stall Prevention level. 2: Intelligent. Decelerate as fast as possible while avoiding ov faults. 3: Stall Prevention with braking resistor. Stall Prevention during deceleration is enabled in coordination with dynamic braking. 4: Overexcitation Deceleration. Decelerates while increasing the motor flux. 5: Overexcitation Deceleration 2. Adjust the deceleration rate according to the DC voltage. **Note:** Setting 3 is not available in models 4A0930 and 4A1200.	Default: 1 Range: 0 to 5 <2>	*348*
L3-05 (0493)	Stall Prevention Selection during Run	StallP Run Sel 0: Disabled 1: Decel Time 1 2: Decel Time 2	**V/f** **V/f w PG** OLV CLV **OLV/PM** AOLV/PM CLV/PM 0: Disabled. Drive runs at a set frequency. A heavy load may cause stalling. 1: Decel time 1. Uses the deceleration time set to C1-02 while Stall Prevention is performed. 2: Decel time 2. Uses the deceleration time set to C1-04 while Stall Prevention is performed.	Default: 1 Range: 0 to 2	*349*
L3-06 (0494)	Stall Prevention Level during Run	StallP Run Level	**V/f** **V/f w PG** OLV CLV **OLV/PM** AOLV/PM CLV/PM Enabled when L3-05 is set to 1 or 2. 100% is equal to the drive rated current.	Default: <1> Min.: 30% Max.: 150% <1>	*349*
L3-11 (04C7)	Overvoltage Suppression Function Selection	OV Inhibit Sel 0: Disabled 1: Enabled	**All Modes** Enables or disables the ov suppression function, which allows the drive to change the output frequency as the load changes to prevent an ov fault. 0: Disabled 1: Enabled	Default: 0 Range: 0, 1	*350*

No. (Addr. Hex)	Name	LCD Display	Description	Values	Page
L3-17 (0462)	Target DC Bus Voltage for Overvoltage Suppression and Stall Prevention	DC Bus Reg Level	**All Modes** Sets the desired value for the DC bus voltage during overvoltage suppression and Stall Prevention during deceleration.	Default: 375 Vdc <3> <8> Min.: 150 Max.: 400 <8>	350
L3-20 (0465)	DC Bus Voltage Adjustment Gain	DC Bus P Gain	**All Modes** Sets the proportional gain for KEB Ride-Thru, Stall Prevention, and overvoltage suppression.	Default: <4> Min.: 0.00 Max.: 5.00	350
L3-21 (0466)	Accel/Decel Rate Calculation Gain	Acc/Dec P Gain	**All Modes** Sets the proportional gain used to calculate the deceleration rate during KEB Ride-Thru, ov suppression function, and Stall Prevention during deceleration (L3-04 = 2).	Default: 1.00 Min.: 0.10 Max.: 10.00	351
L3-22 (04F9)	Deceleration Time at Stall Prevention during Acceleration	PM Acc Stall P T	V/f, V/f w PG, OLV, CLV, **OLV/PM**, AOLV/PM, CLV/PM Sets the deceleration time used for Stall Prevention during acceleration in OLV/PM.	Default: 0.0 s Min.: 0.0 Max.: 6000.0	347
L3-23 (04FD)	Automatic Reduction Selection for Stall Prevention during Run	CHP Stall P Sel 0: Lv1 set in L3-06 1: Autom. Reduction	**V/f**, **V/f w PG**, OLV, CLV, OLV/PM, AOLV/PM, CLV/PM 0: Sets the Stall Prevention level set in L3-04 that is used throughout the entire frequency range. 1: Automatic Stall Prevention level reduction in the constant output range. The lower limit value is 40% of L3-06.	Default: 0 Range: 0, 1	349
L3-24 (046E)	Motor Acceleration Time for Inertia Calculations	Mtr Accel Time	**All Modes** Sets the time needed to accelerate the uncoupled motor at rated torque from stop to the maximum frequency.	Default: <5> <6> <7> Min: 0.001 s Max: 10.000 s	351
L3-25 (046F)	Load Inertia Ratio	Load Inertia Rat	**V/f**, V/f w PG, **OLV**, CLV, **OLV/PM**, **AOLV/PM**, CLV/PM Sets the ratio between the motor and machine inertia.	Default: 1.0 Min.: 1.0 Max.: 1000.0	351
L3-26 (0455)	Additional DC Bus Capacitors	ExtDC busCapSize	**All Modes** When DC bus capacitors have been added externally, be sure to add those values to the internal capacitor table for proper DC bus calculations.	Default: 0 µF Min: 0 Max: 65000	352
L3-27 (0456)	Stall Prevention Detection Time	Stl Prev DetTime	**V/f**, **V/f w PG**, OLV, CLV, **OLV/PM**, AOLV/PM, CLV/PM Sets the time the current must exceed the Stall Prevention level to activate Stall Prevention.	Default: 50 ms Min.: 0 Max.: 5000	352
L3-34 (016F)	Torque Limit Delay Time	TRQ Dly Filter T	V/f, V/f w PG, OLV, CLV, OLV/PM, **AOLV/PM**, **CLV/PM** Sets the filter time constant in seconds for the torque limit value to return to set value when the Power KEB Ride-Thru is enabled (L2-29 = 1). If oscillation occurs during Power KEB Ride-Thru, gradually increase this setting in increments of 0.010 s. **Note:** This parameter is not available in models 4A0930 and 4A1200.	Default: <9> Min.: 0.000 Max.: 1.000	352
L3-35 (0747) <10>	Speed Agree Width at Intelligent Stall Prevention during Deceleration	IntDecSpdAgrWdth	**V/f**, **V/f w PG**, **OLV**, **CLV**, **OLV/PM**, AOLV/PM, CLV/PM Sets the width of the speed agree when L3-04 = 2 (Intelligent Stall Prevention during deceleration) in units of 0.01 Hz. There is normally no need to change this parameter from the default value. **Note:** This parameter is not available in models 4A0930 and 4A1200.	Default: 0.00 Hz Min.: 0.00 Max.: 1.00	352

<1> The default setting and upper limit are determined by C6-01, Drive Duty Selection, and L8-38, Frequency Reduction Selection.

<2> The setting range is 0 to 2 in OLV/PM control mode. The setting range is 0 and 1 in CLV or AOLV/PM control modes.

<3> Default setting is determined by parameter E1-01, Input voltage Setting.

<4> Default setting is determined by parameter A1-02, Control Method Selection.

<5> Parameter value changes automatically if E2-11 is manually changed or changed by Auto-Tuning.

<6> Default setting is determined by parameters C6-01, Drive Duty Selection, and o2-04, Drive Model Selection.
<7> Default setting is determined by parameter E5-01, Motor Code Selection.
<8> Values shown are specific to 200 V class drives. Double the value for 400 V class drives. Multiply the value by 2.875 for 600 V class drives, but set the value below 1040 Vdc (overvoltage protection level).
<9> Default setting is determined by parameter A1-02, Control Method Selection.
When A1-02 = 6 (AOLV/PM), default is 0.2
When A1-02 = 7 (CLV/PM), default is 0.02.
<10> Available in drive software versions PRG: 1018 and later.

◆ L4: Speed Detection

No. (Addr. Hex)	Name	LCD Display	Description	Values	Page
L4-01 (0499)	Speed Agree Detection Level	Spd Agree Level	All Modes L4-01 sets the frequency detection level for digital output functions H2-□□ = 2, 3, 4, 5.	Default: 0.0 Hz Min.: 0.0 Max.: 400.0	352
L4-02 (049A)	Speed Agree Detection Width	Spd Agree Width	All Modes L4-02 sets the hysteresis or allowable margin for speed detection.	Default: <1> Min.: 0.0 Max.: 20.0	352
L4-03 (049B)	Speed Agree Detection Level (+/-)	Spd Agree Lvl+-	All Modes L4-03 sets the frequency detection level for digital output functions H2-□□ = 13, 14, 15, 16.	Default: 0.0 Hz Min.: -400.0 Max.: 400.0	353
L4-04 (049C)	Speed Agree Detection Width (+/-)	Spd Agree Wdth+-	All Modes L4-04 sets the hysteresis or allowable margin for speed detection.	Default: <1> Min.: 0.0 Max.: 20.0	353
L4-05 (049D)	Frequency Reference Loss Detection Selection	Ref Loss Sel 0: Stop 1: Run@L4-06PrevRef	All Modes 0: Operate following the frequency reference. 1: Continue operation with reduced frequency reference.	Default: 0 Range: 0, 1	353
L4-06 (04C2)	Frequency Reference at Reference Loss	Fref at Floss	All Modes Sets the percentage of the frequency reference that the drive should run with when the frequency reference is lost.	Default: 80.0% Min.: 0.0 Max.: 100.0	353
L4-07 (0470)	Speed Agree Detection Selection	Freq Detect Sel 0: No Detection @BB 1: Always Detected	All Modes 0: No detection during baseblock. 1: Detection always enabled.	Default: 0 Range: 0, 1	353

<1> Default setting is determined by parameter A1-02, Control Method Selection.

◆ L5: Fault Restart

No. (Addr. Hex)	Name	LCD Display	Description	Values	Page
L5-01 (049E)	Number of Auto Restart Attempts	Num of Restarts	All Modes Sets the number of times the drive may attempt to restart after the following faults occur: GF, LF, oC, oH1, ov, PF, rH, rr, oL1, oL2, oL3, oL4, STo, Uv1.	Default: 0 Min.: 0 Max.: 10	354
L5-02 (049F)	Auto Restart Fault Output Operation Selection	Restart Sel 0: Flt Outp Disabld 1: Flt Outp Enabled	All Modes 0: Fault output not active. 1: Fault output active during restart attempt.	Default: 0 Range: 0, 1	354
L5-04 (046C)	Fault Reset Interval Time	Flt Reset Wait T	All Modes Sets the amount of time to wait between performing fault restarts.	Default: 10.0 s Min.: 0.5 Max.: 600.0	355

No. (Addr. Hex)	Name	LCD Display	Description	Values	Page
L5-05 (0467)	Fault Reset Operation Selection	Fault Reset Sel 0: Continuous 1: Use L5-04 Time	All Modes 0: Continuously attempt to restart while incrementing restart counter only at a successful restart (same as F7 and G7). 1: Attempt to restart with the interval time set in L5-04 and increment the restart counter with each attempt (same as V7).	Default: 0 Range: 0, 1	355

◆ L6: Torque Detection

No. (Addr. Hex)	Name	LCD Display	Description	Values	Page
L6-01 (04A1)	Torque Detection Selection 1	Torq Det 1 Sel 0: Disabled 1: OL Alm at SpdAgr 2: OL Alm dur RUN 3: OL Flt at SpdAgr 4: OL Flt dur RUN 5: UL Alm at SpdAgr 6: UL Alm dur RUN 7: UL Flt at SpdAgr 8: UL Flt dur RUN	All Modes 0: Disabled 1: oL3 detection only active during speed agree, operation continues after detection 2: oL3 detection always active during run, operation continues after detection 3: oL3 detection only active during speed agree, output shuts down on an oL3 fault 4: oL3 detection always active during run, output shuts down on an oL3 fault 5: UL3 detection only active during speed agree, operation continues after detection 6: UL3 detection always active during run, operation continues after detection 7: UL3 detection only active during speed agree, output shuts down on a UL3 fault 8: UL3 detection always active during run, output shuts down on a UL3 fault	Default: 0 Range: 0 to 8	356
L6-02 (04A2)	Torque Detection Level 1	Torq Det 1 Lvl	All Modes Sets the overtorque and undertorque detection level.	Default: 150% Min.: 0 Max.: 300	357
L6-03 (04A3)	Torque Detection Time 1	Torq Det 1 Time	All Modes Sets the time an overtorque or undertorque condition must exist to trigger torque detection 1.	Default: 0.1 s Min.: 0.0 Max.: 10.0	357
L6-04 (04A4)	Torque Detection Selection 2	Torq Det 2 Sel 0: Disabled 1: OL Alm at SpdAgr 2: OL Alm dur RUN 3: OL Flt at SpdAgr 4: OL Flt dur RUN 5: UL Alm at SpdAgr 6: UL Alm dur RUN 7: UL Flt at SpdAgr 8: UL Flt dur RUN	All Modes 0: Disabled 1: oL4 detection only active during speed agree, operation continues after detection 2: oL4 detection always active during run, operation continues after detection 3: oL4 detection only active during speed agree, output shuts down on an oL4 fault 4: oL4 detection always active during run, output shuts down on an oL4 fault 5: UL4 detection only active during speed agree, operation continues after detection 6: UL4 detection always active during run, operation continues after detection 7: UL4 detection only active during speed agree, output shuts down on a UL4 fault 8: UL4 detection always active during run, output shuts down on a UL4 fault	Default: 0 Range: 0 to 8	356
L6-05 (04A5)	Torque Detection Level 2	Torq Det 2 Lvl	All Modes Sets the overtorque and undertorque detection level.	Default: 150% Min.: 0 Max.: 300	357
L6-06 (04A6)	Torque Detection Time 2	Torq Det 2 Time	All Modes Sets the time an overtorque or undertorque condition must exist to trigger torque detection 2.	Default: 0.1 s Min.: 0.0 Max.: 10.0	357

No. (Addr. Hex)	Name	LCD Display	Description	Values	Page
L6-08 (0468)	Mechanical Weakening Detection Operation	Mech Fatigue Sel 0: Disabled 1: Alm Spd>L6-09 2: Alm [Spd]>L6-09 3: Flt Spd>L6-09 4: Flt [Spd]>L6-09 5: Alm Spd<L6-09 6: Alm [Spd]<L6-09 7: Flt Spd<L6-09 8: Flt [Spd]<L6-09	**All Modes** This function can detect an overtorque or undertorque in a certain speed range as a result of machine fatigue. It is triggered by a specified operation time and uses the oL3/UL3 detection settings (L6-01, L6-02, and L6-03). 0: Mechanical Weakening Detection disabled. 1: Continue running (alarm only). Detected when the speed (signed) is greater than L6-09. 2: Continue running (alarm only). Detected when the speed (not signed) is greater than L6-09. 3: Interrupt drive output (fault). Detected when the speed (signed) is greater than L6-09. 4: Interrupt drive output (fault). Detected when the speed (not signed) is greater than L6-09. 5: Continue running (alarm only). Detected when the speed (signed) is less than L6-09. 6: Continue running (alarm only). Detected when the speed (not signed) is less than L6-09. 7: Interrupt drive output (fault). Detected when the speed (signed) is less than L6-09. 8: Interrupt drive output (fault). Detected when the speed (not signed) is less than L6-09.	Default: 0 Range: 0 to 8	*357*
L6-09 (0469)	Mechanical Weakening Detection Speed Level	MechFat Det Spd	**All Modes** Sets the speed that triggers Mechanical Weakening Detection. When L6-08 is set for an unsigned value, the absolute value is used if the setting is negative.	Default: 110.0% Min.: -110.0 Max.: 110.0	*358*
L6-10 (046A)	Mechanical Weakening Detection Time	MechFat Det Time	**All Modes** Sets the time mechanical weakening has to be detected before an alarm or fault is triggered.	Default: 0.1 s Min.: 0.0 Max.: 10.0	*358*
L6-11 (046B)	Mechanical Weakening Detection Start Time	MechFat Det Hour	**All Modes** Sets the operation time (U4-01) required before Mechanical Weakening Detection is active.	Default: 0 h Min.: 0 Max.: 65535	*358*

◆ L7: Torque Limit

No. (Addr. Hex)	Name	LCD Display	Description	Values	Page
L7-01 (04A7)	Forward Torque Limit	Torq Limit Fwd	V/f, V/f w PG, **OLV**, **CLV**, OLV/PM, **AOLV/PM**, **CLV/PM** Sets the torque limit value as a percentage of the motor rated torque. Four individual quadrants can be set. 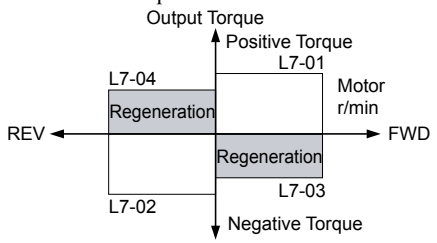 	Default: 200% Min.: 0 Max.: 300	*359*
L7-02 (04A8)	Reverse Torque Limit	Torq Limit Rev		Default: 200% Min.: 0 Max.: 300	*359*
L7-03 (04A9)	Forward Regenerative Torque Limit	Torq Lmt Fwd Rgn		Default: 200% Min.: 0 Max.: 300	*359*
L7-04 (04AA)	Reverse Regenerative Torque Limit	Torq Lmt Rev Rgn		Default: 200% Min.: 0 Max.: 300	*359*
L7-06 (04AC)	Torque Limit Integral Time Constant	Trq Lim I Time	V/f, V/f w PG, **OLV**, CLV, OLV/PM, AOLV/PM, CLV/PM Sets the integral time constant for the torque limit.	Default: 200 ms Min: 5 Max: 10000	*359*
L7-07 (04C9)	Torque Limit Control Method Selection during Accel/Decel	Trq Lim d AccDec P-ctrl @ Acc/Dec I-ctrl @ Acc/Dec	V/f, V/f w PG, **OLV**, CLV, OLV/PM, AOLV/PM, CLV/PM 0: Proportional control (changes to integral control at constant speed). Use this setting when acceleration to the desired speed should take precedence over the torque limit. 1: Integral control. Set L7-07 to 1 if the torque limit should take precedence.	Default: 0 Range: 0, 1	*359*

No. (Addr. Hex)	Name	LCD Display	Description	Values	Page
L7-16 (044D) <1>	Torque Limit Process at Start	TLim DlyTime Sel 0: Disabled 1: Enabled	V/f, V/f w PG, OLV, CLV, OLV/PM, AOLV/PM, CLV/PM 0: Disabled 1: Enabled	Default: 1 Range: 0, 1	359

<1> Available in drive software versions PRG: 1018 and later.

◆ L8: Drive Protection

No. (Addr. Hex)	Name	LCD Display	Description	Values	Page
L8-01 (04AD)	Internal Dynamic Braking Resistor Protection Selection (ERF type)	DB Resistor Prot 0: Not Provided 1: Provided	All Modes 0: Resistor overheat protection disabled 1: Resistor overheat protection enabled **Note:** This parameter is not available in models 4A0930 and 4A1200.	Default: 0 Range: 0, 1	360
L8-02 (04AE)	Overheat Alarm Level	OH Pre-Alarm Lvl	All Modes An overheat alarm occurs when heatsink temperature exceeds the L8-02 level.	Default: <1> Min.: 50 °C Max.: 150 °C	360
L8-03 (04AF)	Overheat Pre-Alarm Operation Selection	OH Pre-Alarm Sel 0: Ramp to Stop 1: Coast to Stop 2: Fast-Stop 3: Alarm Only 4: Run@L8-19 Rate	All Modes 0: Ramp to stop. A fault is triggered. 1: Coast to stop. A fault is triggered. 2: Fast Stop. Decelerate to stop using the deceleration time in C1-09. A fault is triggered. 3: Continue operation. An alarm is triggered. 4: Continue operation at reduced speed as set in L8-19.	Default: 3 Range: 0 to 4	360
L8-05 (04B1)	Input Phase Loss Protection Selection	Inp Ph Loss Det 0: Disabled 1: Enabled	All Modes Selects the detection of input current phase loss, power supply voltage imbalance, or main circuit electrolytic capacitor deterioration. 0: Disabled 1: Enabled	Default: 1 Range: 0, 1	361
L8-07 (04B3)	Output Phase Loss Protection Selection	Outp Ph Loss Det 0: Disabled 1: 1PH Loss Det 2: 2/3PH Loss Det	All Modes 0: Disabled 1: Enabled (triggered by a single phase loss) 2: Enabled (triggered when two phases are lost)	Default: 1 Range: 0 to 2	361
L8-09 (04B5)	Output Ground Fault Detection Selection	Grnd Flt Det Sel 0: Disabled 1: Enabled	All Modes 0: Disabled 1: Enabled	Default: <1> Range: 0, 1	362
L8-10 (04B6)	Heatsink Cooling Fan Operation Selection	Fan On/Off Sel 0: Dur Run (OffDly) 1: Always On	All Modes 0: Run with timer (Fan operates only during run and for L8-11 seconds after stop.) 1: Run always (Cooling fan operates whenever the drive is powered up.)	Default: 0 Range: 0, 1	362
L8-11 (04B7)	Heatsink Cooling Fan Off Delay Time	Fan Delay Time	All Modes Sets a delay time to shut off the cooling fan after the Run command is removed when L8-10 = 0.	Default: 60 s Min.: 0 Max.: 300	362
L8-12 (04B8)	Ambient Temperature Setting	Ambient Temp	All Modes Enter the ambient temperature. This value adjusts the oL2 detection level.	Default: 40 °C Min.: -10 Max.: 50	362
L8-15 (04BB)	oL2 Characteristics Selection at Low Speeds	OL2 Sel @ L-Spd 0: Disabled 1: Enabled	All Modes 0: No oL2 level reduction below 6 Hz. 1: oL2 level is reduced linearly below 6 Hz. It is halved at 0 Hz.	Default: 1 Range: 0, 1	362

No. (Addr. Hex)	Name	LCD Display	Description	Values	Page
L8-18 (04BE)	Software Current Limit Selection	Soft CLA Sel 0: Disabled 1: Enabled	**V/f** **V/f w PG** **OLV** **CLV** OLV/PM AOLV/PM CLV/PM 0: Disabled 1: Enabled	Default: 0 Range: 0, 1	363
L8-19 (04BF)	Frequency Reduction Rate during Overheat Pre-Alarm	Fc Red dur OHAlm	**All Modes** Specifies the frequency reference reduction gain at overheat pre-alarm when L8-03 = 4.	Default: 0.8 Min.: 0.1 Max.: 0.9	363
L8-27 (04DD)	Overcurrent Detection Gain	OC Level	V/f V/f w PG OLV CLV **OLV/PM** **AOLV/PM** **CLV/PM** Sets the gain for overcurrent detection as a percentage of the motor rated current. Overcurrent is detected using the lower value between the overcurrent level of the drive or the value set to L8-27.	Default: 300.0% Min.: 0.0 Max.: 400.0	363
L8-29 (04DF)	Current Unbalance Detection (LF2)	LF2 Flt Det Sel 0: Disabled 1: Current&Voltage 2: Current Det Type 3: Voltage Det Type	V/f V/f w PG OLV CLV **OLV/PM** **AOLV/PM** **CLV/PM** For models 2A0004 to 2A0415, 4A0002 to 4A0675, and 5A0003 to 5A0242: 0: Disabled 1: Enabled (current and voltage detection) 2: Enabled (current detection) 3: Enabled (voltage detection) For models 4A0930 and 4A1200: 0: Disabled 1: Enabled (current detection)	Default: 1 Range: 0 to 3 Range: 0, 1	363
L8-32 (04E2)	Cooling Fan Failure Selection	MC/FAN PS FltSel 0: Ramp to Stop 1: Coast to Stop 2: Fast-Stop 3: Alarm Only 4: Run@L8-19 Rate	**All Modes** Determines drive response when a fault occurs with the internal cooling fan. 0: Ramp to stop 1: Coast to stop 2: Fast stop (Decel to stop using the decel time set in C1-09) 3: Alarm only (“FAn” will flash) 4: Continue operation at reduced speed as set in L8-19.	Default: 1 Range: 0 to 4	363
L8-35 (04EC)	Installation Method Selection	Installation Sel 0: IP00/OpenChassis 1: Side-by-Side 2: IP20/Nema Type 1 3: Finless/Fin Ext	**All Modes** 0: IP00/Open-Chassis enclosure 1: Side-by-Side mounting 2: IP20/NEMA 1, UL Type 1 enclosure 3: Finless model drive or external heatsink installation	Default: <2> Range: 0 to 3	364
L8-38 (04EF)	Carrier Frequency Reduction	Fc Reduct dur OL 0: Disabled 1: Active below 6Hz 2: Active @ any Spd	**V/f** **V/f w PG** **OLV** **CLV** **OLV/PM** AOLV/PM **CLV/PM** 0: Disabled 1: Enabled below 6 Hz 2: Enabled for the entire speed range	Default: <3> Range: 0 to 2	364
L8-40 (04F1)	Carrier Frequency Reduction Off Delay Time	Fc Reduct Time	**V/f** **V/f w PG** **OLV** **CLV** **OLV/PM** AOLV/PM **CLV/PM** Sets the time that the drive continues running with reduced carrier frequency after the carrier reduction condition is gone. Setting 0.00 s disables the carrier frequency reduction time.	Default: <4> Min.: 0.00 s Max.: 2.00 s	365
L8-41 (04F2)	High Current Alarm Selection	High Cur Alm Sel 0: Disabled 1: Enabled	**All Modes** 0: Disabled 1: Enabled. An alarm is triggered at output currents above 150% of drive rated current.	Default: 0 Range: 0, 1	365
L8-55 (045F)	Internal Braking Transistor Protection	DB Tr protection 0: Disable 1: Enable	**All Modes** 0: Disabled. Disable when using a regen converter or optional braking unit. 1: Protection enabled. **Note:** This parameter is not available in models 4A0930 and 4A1200.	Default: 1 Range: 0, 1	365

No. (Addr. Hex)	Name	LCD Display	Description	Values	Page
L8-78 (02CC)	Power Unit Output Phase Loss Protection	LF3 Det Sel 0: Disabled 1: Enabled	All Modes Enables motor protection in the event of output phase loss. 0: Disabled 1: Enabled **Note:** This parameter is only available in models 4A0930 and 4A1200.	Default: 1 Range: 0, 1	365
L8-93 (073C)	LSo Detection Time at Low Speed	LSO Det Time	V/f, V/f w PG, OLV, CLV, OLV/PM, AOLV/PM, CLV/PM Sets the amount of time until baseblock is executed after detecting pull-out at low speed.	Default: 1.0 s Min.: 0.0 Max.: 10.0	365
L8-94 (073D)	LSo Detection Level at Low Speed	LSO Det Level	V/f, V/f w PG, OLV, CLV, OLV/PM, AOLV/PM, CLV/PM Determines the detection level of pull-out at low speed.	Default: 3% Min.: 0 Max.: 10	366
L8-95 (073F)	Average LSo Frequency at Low Speed	Num of LSO Avg	V/f, V/f w PG, OLV, CLV, OLV/PM, AOLV/PM, CLV/PM Sets the average number of times pull-out can occur at low speed.	Default: 10 times Min.: 1 Max.: 50	366

<1> Default setting is determined by parameters C6-01, Drive Duty Selection, and o2-04, Drive Model Selection.
<2> Default setting is determined by parameter o2-04, Drive Model Selection.
<3> Default setting is determined by parameters A1-02, Control Method Selection, and o2-04, Drive Model Selection.
<4> Default setting is determined by parameter A1-02, Control Method Selection.

◆ L9: Drive Protection 2

No. (Addr. Hex)	Name	LCD Display	Description	Values	Page
L9-03 (0819) <1>	Carrier Frequency Reduction Level Selection	Fc ReductLvl Sel 0: Disabled 1: Enabled	V/f, V/f w PG, OLV, CLV, OLV/PM, AOLV/PM, CLV/PM Selects the level to start frequency reduction or to clear the current frequency level for automatic carrier frequency reduction. There is normally no need to change this parameter from the default value. 0: Reduces the carrier frequency based on the drive rated current that is not derated. 1: Reduces the carrier frequency based on the drive rated current that is derated by the carrier frequency and the temperature selected for C6-02. **Note:** This parameter is not available in models 4A0930 and 4A1200.	Default: 0 Range: 0, 1	366

<1> Available in drive software versions PRG: 1018 and later.

B.11 n: Special Adjustment

The n parameters adjust more advanced performance characteristics such as Hunting Prevention, speed feedback detection, High Slip Braking, and Online Tuning for motor line-to-line resistance.

◆ n1: Hunting Prevention

No. (Addr. Hex)	Name	LCD Display	Description	Values	Page
n1-01 (0580)	Hunting Prevention Selection	Hunt Prev Select 0: Disabled 1: Enabled	**V/f** **V/f w PG** OLV CLV OLV/PM AOLV/PM CLV/PM 0: Disabled 1: Enabled	Default: 1 Range: 0, 1	367
n1-02 (0581)	Hunting Prevention Gain Setting	Hunt Prev Gain	**V/f** **V/f w PG** OLV CLV OLV/PM AOLV/PM CLV/PM If the motor vibrates while lightly loaded, increase the gain by 0.1 until vibration ceases. If the motor stalls, decrease the gain by 0.1 until the stalling ceases.	Default: 1.00 Min.: 0.00 Max.: 2.50	367
n1-03 (0582)	Hunting Prevention Time Constant	Hunt Prev Time	**V/f** **V/f w PG** OLV CLV OLV/PM AOLV/PM CLV/PM Sets the time constant used for Hunting Prevention.	Default: <1> Min.: 0 ms Max.: 500 ms	367
n1-05 (0530)	Hunting Prevention Gain while in Reverse	Hprev Gain @Rev	**V/f** **V/f w PG** OLV CLV OLV/PM AOLV/PM CLV/PM Sets the gain used for Hunting Prevention. If set to 0, the gain set to n1-02 is used for operation in reverse.	Default: 0.00 Min.: 0.00 Max.: 2.50	367

<1> Default setting is determined by parameter o2-04, Drive Model Selection.

◆ n2: Speed Feedback Detection Control (AFR) Tuning

No. (Addr. Hex)	Name	LCD Display	Description	Values	Page
n2-01 (0584)	Speed Feedback Detection Control (AFR) Gain	AFR Gain	V/f V/f w PG **OLV** CLV OLV/PM AOLV/PM CLV/PM Sets the internal speed feedback detection control gain in the automatic frequency regulator (AFR). If hunting occurs, increase the set value. If response is low, decrease the set value.	Default: 1.00 Min.: 0.00 Max.: 10.00	368
n2-02 (0585)	Speed Feedback Detection Control (AFR) Time Constant 1	AFR Time	V/f V/f w PG **OLV** CLV OLV/PM AOLV/PM CLV/PM Sets the time constant used for speed feedback detection control (AFR).	Default: 50 ms Min.: 0 Max.: 2000	368
n2-03 (0586)	Speed Feedback Detection Control (AFR) Time Constant 2	AFR Time 2	V/f V/f w PG **OLV** CLV OLV/PM AOLV/PM CLV/PM Sets the AFR time constant to be used during Speed Search and during regen.	Default: 750 ms Min.: 0 Max.: 2000	368

◆ n3: High Slip Braking (HSB) and Overexcitation Braking

No. (Addr. Hex)	Name	LCD Display	Description	Values	Page
n3-01 (0588)	High-Slip Braking Deceleration Frequency Width	HSB DecStepWidth	**V/f** **V/f w PG** OLV CLV OLV/PM AOLV/PM CLV/PM Sets the output frequency reduction step width for when the drive stops the motor using HSB. Set as a percentage of the maximum output frequency. Increase this setting if overvoltage occurs during HSB.	Default: 5% Min.: 1 Max.: 20	368
n3-02 (0589)	High-Slip Braking Current Limit	HSB Current Lim	**V/f** **V/f w PG** OLV CLV OLV/PM AOLV/PM CLV/PM Sets the current limit during HSB as a percentage of the motor rated current.	Default: <1> Min.: 100% Max.: <1>	369
n3-03 (058A)	High-Slip Braking Dwell Time at Stop	HSB DwelTim@Stp	**V/f** **V/f w PG** OLV CLV OLV/PM AOLV/PM CLV/PM Sets the time the drive will run with minimum frequency (E1-09) at the end of deceleration. If this time is set too low, the machine inertia can cause the motor to rotate slightly after HSB.	Default: 1.0 s Min.: 0.0 Max.: 10.0	369
n3-04 (058B)	High-Slip Braking Overload Time	HSB OL Time	**V/f** **V/f w PG** OLV CLV OLV/PM AOLV/PM CLV/PM Sets the time required for an HSB overload fault (oL7) to occur when the drive output frequency does not change during an HSB stop. This parameter does not typically require adjustment.	Default: 40 s Min.: 30 Max.: 1200	369
n3-13 (0531)	Overexcitation Deceleration Gain	Hflux Brake Gain	**V/f** **V/f w PG** **OLV** **CLV** OLV/PM AOLV/PM CLV/PM Sets the gain applied to the V/f pattern during Overexcitation Deceleration (L3-04 = 4).	Default: 1.10 Min.: 1.00 Max.: 1.40	370
n3-14 (0532)	High Frequency Injection during Overexcitation Deceleration	HarmInj@HiFlxBrk 0: Disabled 1: Enabled	**V/f** **V/f w PG** **OLV** CLV OLV/PM AOLV/PM CLV/PM 0: Disabled 1: Enabled	Default: 0 Range: 0, 1	370
n3-21 (0579)	High-Slip Suppression Current Level	Hflux I Supp Lvl	**V/f** **V/f w PG** **OLV** **CLV** OLV/PM AOLV/PM CLV/PM Sets output current level at which the drive will start reducing the overexcitation gain in order to prevent a too high motor slip during Overexcitation Deceleration. Set as a percentage of the drive rated current.	Default: 100% Min.: 0 Max.: 150	370
n3-23 (057B)	Overexcitation Operation Selection	Hflux Brake Sel 0: Enabled-Both Dir 1: Enabled-Fwd only 2: Enabled-Rev only	**V/f** **V/f w PG** **OLV** **CLV** OLV/PM AOLV/PM CLV/PM 0: Enabled in both directions 1: Enabled only when rotating forward 2: Enabled only when in reverse	Default: 0 Range: 0 to 2	370

<1> The upper limit of the setting range and default setting are determined by parameters C6-01, Drive Duty Selection, and L8-38, Frequency Reduction Selection.

◆ n5: Feed Forward Control

No. (Addr. Hex)	Name	LCD Display	Description	Values	Page
n5-01 (05B0)	Feed Forward Control Selection	Feedfoward Sel 0: Disabled 1: Enabled	V/f, V/f w PG, OLV, **CLV**, OLV/PM, **AOLV/PM**, **CLV/PM** 0: Disabled 1: Enabled	Default: 0 Range: 0, 1	*371*
n5-02 (05B1)	Motor Acceleration Time	Motor Accel Time	V/f, V/f w PG, OLV, **CLV**, OLV/PM, **AOLV/PM**, **CLV/PM** Sets the time required to accelerate the motor at the rated torque from stop to rated speed.	Default: *<1> <2>* Min.: 0.001 s Max.: 10.000 s	*371*
n5-03 (05B2)	Feed Forward Control Gain	Feedfoward Gain	V/f, V/f w PG, OLV, **CLV**, OLV/PM, **AOLV/PM**, **CLV/PM** Sets the ratio between motor and load inertia. Lower this setting if overshoot occurs at the end of acceleration.	Default: 1.00 Min.: 0.00 Max.: 100.00	*372*

<1> Default setting is determined by parameter E5-01, Motor Code Selection.

<2> Default setting is determined by parameters C6-01, Drive Duty Selection, and o2-04, Drive Model Selection.

◆ n6: Online Tuning

No. (Addr. Hex)	Name	LCD Display	Description	Values	Page
n6-01 (0570)	Online Tuning Selection	Online Tune Sel	V/f, V/f w PG, **OLV**, CLV, OLV/PM, AOLV/PM, CLV/PM 0: Disabled 1: Line-to-line resistance tuning 2: Voltage correction. Setting not possible when Energy Saving is enabled (b8-01).	Default: 0 Range: 0 to 2	*373*
n6-05 (05C7)	Online Tuning Gain	R1 Comp Gain	V/f, V/f w PG, **OLV**, CLV, OLV/PM, AOLV/PM, CLV/PM Decrease this setting for motors with a relatively large rotor time constant.	Default: 1.0 Min.: 0.1 Max.: 50.0	*373*

◆ n8: PM Motor Control Tuning

No. (Addr. Hex)	Name	LCD Display	Description	Values	Page
n8-01 (0540)	Initial Rotor Position Estimation Current	InitRotPosDetCur	V/f, V/f w PG, OLV, CLV, OLV/PM, **AOLV/PM**, **CLV/PM** Sets the current used for initial rotor position estimation as a percentage of the motor rated current (E5-03). If the motor nameplate lists an “Si” value, that value should be entered here.	Default: 50% Min.: 0 Max.: 100	*373*
n8-02 (0541)	Pole Attraction Current	Pull-In Current	V/f, V/f w PG, OLV, CLV, OLV/PM, **AOLV/PM**, **CLV/PM** Sets the current during initial polar attraction as a percentage of the motor rated current. **Note:** This parameter is not available in models 4A0930 and 4A1200 for CLV/PM.	Default: 80% Min.: 0 Max.: 150	*373*

No. (Addr. Hex)	Name	LCD Display	Description	Values	Page
n8-03 (0542)	Current Startup Time	CurrentRampTime	V/f, V/f w PG, OLV, CLV, OLV/PM, AOLV/PM, **CLV/PM** Sets the current startup time to detect the rotor pole when tuning the phase-Z pulse position. Set this parameter to a large value if the motor vibrates when tuning the phase-Z pulse position. There is normally no need to change this parameter from the default value. **Note:** This parameter is not available in models 4A0930 and 4A1200.	Default: 1.5 Min.: 1.5 Max.: 5.0	373
n8-04 (0543)	Pole Attraction Time	Pull-In Time	V/f, V/f w PG, OLV, CLV, OLV/PM, AOLV/PM, **CLV/PM** Sets the pole attraction time to detect the rotor pole when tuning the phase-Z pulse position. Set this parameter to a large value if the motor vibrates when tuning the phase-Z pulse position. There is normally no need to change this parameter from the default value. **Note:** This parameter is not available in models 4A0930 and 4A1200.	Default: 1.5 Min.: 1.5 Max.: 5.0	374
n8-11 (054A) <1>	Induction Voltage Estimation Gain 2	InducedVEstGain2	V/f, V/f w PG, OLV, CLV, OLV/PM, **AOLV/PM**, **CLV/PM** Sets the gain for estimating the speed. There is normally no need to change this parameter from the default value. **Note:** This parameter is not available in models 4A0930 and 4A1200.	Default: <2> Min.: 0.0 Max.: 1000.0	374
n8-14 (054D) <1>	Polarity Compensation Gain 3	PoleComp Gain 3	V/f, V/f w PG, OLV, CLV, OLV/PM, **AOLV/PM**, CLV/PM Sets the gain for estimating the speed. There is normally no need to change this parameter from the default value. **Note:** This parameter is not available in models 4A0930 and 4A1200.	Default: 1.000 Min.: 0.000 Max.: 10.000	374
n8-15 (054E) <1>	Polarity Compensation Gain 4	PoleComp Gain 4	V/f, V/f w PG, OLV, CLV, OLV/PM, **AOLV/PM**, CLV/PM Sets the gain for estimating the speed. There is normally no need to change this parameter from the default value. **Note:** This parameter is not available in models 4A0930 and 4A1200.	Default: 0.500 Min.: 0.000 Max.: 10.000	374
n8-21 (0554) <1>	Motor Ke Gain	Back EMF Gain	V/f, V/f w PG, OLV, CLV, OLV/PM, **AOLV/PM**, CLV/PM Sets the gain for estimating the speed. There is normally no need to change this parameter from the default value. **Note:** This parameter is not available in models 4A0930 and 4A1200.	Default: 0.90 Min.: 0.80 Max.: 1.00	374
n8-35 (0562)	Initial Rotor Position Detection Selection	Init Pole EstSel 0: Pull-In Method 1: Harm Inj Method 2: Pulse Method	V/f, V/f w PG, OLV, CLV, OLV/PM, **AOLV/PM**, **CLV/PM** 0: Pull-in 1: High frequency injection 2: Pulse injection	Default: 1 Range: 0 to 2	374
n8-36 (0563) <1>	High Frequency Injection Level	PM Harm Inj Freq	V/f, V/f w PG, OLV, CLV, OLV/PM, **AOLV/PM**, **CLV/PM** Sets the frequency in Hz for the superimposed signal used for superimposed harmonics. Enabled when n8-57 = 1. There is normally no need to change this parameter from the default value. **Note:** This parameter is not available in models 4A0930 and 4A1200.	Default: 500 Hz Min.: 200 Max.: 1000	375

No. (Addr. Hex)	Name	LCD Display	Description	Values	Page
n8-37 (0564) <1>	High Frequency Injection Amplitude	PM Harm Inj Amp	V/f, V/f w PG, OLV, CLV, OLV/PM, **AOLV/PM**, **CLV/PM** Sets the amplitude for High Frequency Injection as a percentage of the voltage when the voltage class base is 100% (200 V Class is 200 V, 400 V Class is 400 V, and 600 V Class is 575 V). Adjust this value when there is too much or too little current as a result of the settings assigned to motor parameters. Enabled when n8-57 = 1. There is normally no need to change this parameter from the default value. **Note:** This parameter is not available in models 4A0930 and 4A1200.	Default: 20.0% Min.: 0.0 Max.: 50.0	375
n8-39 (0566) <1>	Low Pass Filter Cutoff Frequency for High Frequency Injection	PM Harm LPF Freq	V/f, V/f w PG, OLV, CLV, OLV/PM, **AOLV/PM**, **CLV/PM** Sets the cutoff frequency of a low pass filter for high frequency injection. Enabled when n8-57 = 1. There is normally no need to change this parameter from the default value. **Note:** This parameter is not available in models 4A0930 and 4A1200.	Default: 50 Hz Min.: 0 Max.: 1000	375
n8-45 (0538)	Speed Feedback Detection Control Gain (for PM Motors)	PM Spd Fdbk Gain	V/f, V/f w PG, OLV, CLV, **OLV/PM**, AOLV/PM, CLV/PM Increase this setting if hunting occurs. Decrease to lower the response.	Default: 0.80 Min.: 0.00 Max.: 10.00	375
n8-47 (053A)	Pull-In Current Compensation Time Constant (for PM Motors)	PM Pull-in I Tc	V/f, V/f w PG, OLV, CLV, **OLV/PM**, AOLV/PM, CLV/PM Sets the time constant to make the pull-in current reference and actual current value agree. Decrease the value if the motor begins to oscillate, and increase the value if it takes too long for the current reference to equal the output current.	Default: 5.0 s Min.: 0.0 Max.: 100.0	375
n8-48 (053B)	Pull-In Current (for PM Motors)	PM No-load Curr	V/f, V/f w PG, OLV, CLV, **OLV/PM**, AOLV/PM, CLV/PM Defines the d-Axis current reference during no-load operation at a constant speed. Set as a percentage of the motor rated current. Increase this setting if hunting occurs while running at constant speed.	Default: 30% Min.: 20 Max.: 200	375
n8-49 (053C)	d-Axis Current for High Efficiency Control (for PM Motors)	EnergySav ID Lvl	V/f, V/f w PG, OLV, CLV, **OLV/PM**, AOLV/PM, CLV/PM Sets the d-Axis current reference when running a high load at constant speed. Set as a percentage of the motor rated current.	Default: <3> Min.: -200.0% Max.: 0.0%	376
n8-51 (053E)	Acceleration/ Deceleration Pull-In Current (for PM Motors)	PM Pull-in I@Acc	V/f, V/f w PG, OLV, CLV, **OLV/PM**, AOLV/PM, CLV/PM Sets the d-Axis current reference during acceleration/ deceleration as a percentage of the motor rated current. Set to a high value when more starting torque is needed.	Default: 50% Min.: 0 Max.: 200	376
n8-54 (056D)	Voltage Error Compensation Time Constant	PM V Error CompT	V/f, V/f w PG, OLV, CLV, **OLV/PM**, AOLV/PM, CLV/PM Adjusts the value when hunting occurs at low speed. If hunting occurs with sudden load changes, increase n8-54 in increments of 0.1. Reduce this setting if oscillation occurs at start. Increase this setting if vibration occurs at start.	Default: 1.00 s Min.: 0.00 Max.: 10.00	376
n8-55 (056E)	Load Inertia	PMLoad wk2 Ratio 0: Less than 1:10 1: 1:10 to 1:30 2: 1:30 to 1:50 3: More than 1:50	V/f, V/f w PG, OLV, CLV, **OLV/PM**, AOLV/PM, CLV/PM Sets the ratio between motor and machine inertia. 0: Below 1:10 1: Between 1:10 and 1:30 2: Between 1:30 and 1:50 3: Beyond 1:50	Default: 0 Min.: 0 Max.: 3	376

No. (Addr. Hex)	Name	LCD Display	Description	Values	Page
n8-57 (0574)	High Frequency Injection	PM Harm Inj Sel 0: Disabled 1: Enabled	V/f, V/f w PG, OLV, CLV, OLV/PM, **AOLV/PM**, CLV/PM 0: Disabled. Disable when using an SPM motor. 1: Enabled. Use this setting to enhance the speed control range when using an IPM motor.	Default: 0 Range: 0, 1	377
n8-62 (057D)	Output Voltage Limit (for PM Motors)	PM Vout Limit	V/f, V/f w PG, OLV, CLV, **OLV/PM**, **AOLV/PM**, **CLV/PM** Prevents output voltage saturation. Should be set just below the voltage provided by the input power supply.	Default: 200.0 V <4> Min.: 0.0 Max.: 230.0 <4>	377
n8-65 (065C)	Speed Feedback Detection Control Gain during ov Suppression	SFdbk G @OV Supp	V/f, V/f w PG, OLV, CLV, **OLV/PM**, AOLV/PM, CLV/PM Sets the gain used for internal speed feedback detection during ov suppression.	Default: 1.50 Min.: 0.00 Max.: 10.00	377
n8-69 (065D)	Speed Calculation Gain	SpdSrch Gain	V/f, V/f w PG, OLV, CLV, OLV/PM, **AOLV/PM**, CLV/PM Sets the proportional gain for PLL control of an extended observer. There is normally no need to change this parameter from the default value.	Default: 1.00 Min.: 0.00 Max.: 20.00	377
n8-72 (0655) <1>	Speed Estimation Method Selection	Spd Est method 0: Conventional 1: A1000 method	V/f, V/f w PG, OLV, CLV, OLV/PM, **AOLV/PM**, CLV/PM Sets the method to be used for estimating the speed. 0: Conventional method 1: A1000 method There is normally no need to change this parameter from the default value. **Note:** This parameter is not available in models 4A0930 and 4A1200.	Default: 1 Range: 0, 1	377
n8-84 (02D3)	Initial Polarity Estimation Timeout Current	Polarity Det Curr	V/f, V/f w PG, OLV, CLV, OLV/PM, **AOLV/PM**, **CLV/PM** Sets the current to determine polarity for the initial polarity calculation as a percentage of the motor rated current. 100% = Motor rated current **Note:** If an “Si” value is listed on a Yaskawa motor nameplate, set n8-84 to “Si” value x 2.	Default: 100% Min.: 0 Max.: 150	377

<1> Available in drive software versions PRG: 1018 and later.

<2> Default setting is determined by parameter n8-72, Speed Estimation Method Selection.
When n8-72 = 0, default is 50.0
When n8-72 = 1, default is 150.0.

<3> Default setting is determined by parameter E5-01, Motor Code Selection.

<4> Values shown are specific to 200 V class drives. Double the value for 400 V class drives. Multiply the value by 2.875 for 600 V class drives.

B.12 o: Operator-Related Settings

The o parameters set up the digital operator displays.

◆ o1: Digital Operator Display Selection

No. (Addr. Hex)	Name	LCD Display	Description	Values	Page
o1-01 (0500) RUN	Drive Mode Unit Monitor Selection	User Monitor Sel	**All Modes** Switches the display after the power has been turned on. When using an LED operator, pressing the up arrow key will display the following data: frequency reference → rotational direction → output frequency → output current → output voltage → U1-□□. **Note:** Enter the "1-□□" portion of "U1-□□" to view the monitor. Certain monitors are not available in all control modes.	Default: 106 (Monitor U1-06) Range: 104 to 813	379
o1-02 (0501) RUN	User Monitor Selection after Power Up	Power-On Monitor 1: Frequency Ref 2: FWD/REV 3: Output Freq 4: Output Current 5: User Monitor	**All Modes** Selects the information displayed on the digital operator when the power is turned on. 1: Frequency reference (U1-01) 2: Direction 3: Output frequency (U1-02) 4: Output current (U1-03) 5: User-selected monitor (set by o1-01)	Default: 1 Range: 1 to 5	379
o1-03 (0502)	Digital Operator Display Selection	Display Unit Sel 0: 0.01 Hz 1: 0.01 % 2: r/min 3: User Units	**All Modes** Sets the units the drive should use to display the frequency reference and motor speed monitors. 0: 0.01 Hz 1: 0.01% (100% = E1-04) 2: r/min (calculated using the number of motor poles setting in E2-04, E4-04, or E5-04) 3: User-selected units (set by o1-10 and o1-11)	Default: <1> Range: 0 to 3	379
o1-04 (0503)	V/f Pattern Display Unit	V/f Ptrn Unit 0: Hertz 1: RPM	V/f, V/f w PG, OLV, **CLV**, OLV/PM, **AOLV/PM**, **CLV/PM** 0: Hz 1: r/min	Default: <1> Range: 0, 1	380
o1-05 (0504) RUN <2>	LCD Contrast Control	LCD Contrast	**All Modes** Sets the contrast of the LCD operator.	Default: 3 Min.: 0 Max.: 5	380
o1-10 (0520)	User-Set Display Units Maximum Value	UserDisp Scaling	**All Modes** These settings define the display values when o1-03 is set to 3. o1-10 sets the display value that is equal to the maximum output frequency. o1-11 sets the position of the decimal position.	Default: <3> Range: 1 to 60000	380
o1-11 (0521)	User-Set Display Units Decimal Display	UserDisp Dec Sel		Default: <3> Range: 0 to 3	380

<1> Default setting is determined by parameter A1-02, Control Method Selection.

<2> Available in drive software versions PRG: 1019 and later.

<3> Default setting is determined by parameter o1-03, Digital Operator Display Selection.

◆ o2: Digital Operator Keypad Functions

No. (Addr. Hex)	Name	LCD Display	Description	Values	Page
o2-01 (0505)	LO/RE Key Function Selection	LO/RE Key 0: Disabled 1: Enabled	All Modes 0: Disabled 1: Enabled. LO/RE key switches between LOCAL and REMOTE operation.	Default: 1 Range: 0, 1	380
o2-02 (0506)	STOP Key Function Selection	Oper STOP Key 0: Disabled 1: Enabled	All Modes 0: Disabled. STOP key is disabled in REMOTE operation. 1: Enabled. STOP key is always enabled.	Default: 1 Range: 0, 1	381
o2-03 (0507)	User Parameter Default Value	User Default Sel 0: No Change 1: Save User Init 2: Clear User Init	All Modes 0: No change. 1: Set defaults. Saves parameter settings as default values for a User Initialization. 2: Clear all. Clears the default settings that have been saved for a User Initialization.	Default: 0 Range: 0 to 2	381
o2-04 (0508)	Drive Model Selection	Inverter Model #	All Modes Enter the drive model. Setting required only if installing a new control board.	Default: Determined by drive capacity	381
o2-05 (0509)	Frequency Reference Setting Method Selection	Oper Ref Method 0: Disabled 1: Enabled	All Modes 0: ENTER key must be pressed to enter a frequency reference. 1: ENTER key is not required. The frequency reference can be adjusted using the up and down arrow keys only.	Default: 0 Range: 0, 1	381
o2-06 (050A)	Operation Selection when Digital Operator is Disconnected	Oper Discon Det 0: Disabled 1: Enabled	All Modes 0: The drive continues operating if the digital operator is disconnected. 1: An oPr fault is triggered and the motor coasts to stop.	Default: 1 Range: 0, 1	382
o2-07 (0527)	Motor Direction at Power Up when Using Operator	For/RevSel@PwrUp 0: Forward 1: Reverse	All Modes 0: Forward 1: Reverse This parameter requires assigning drive operation to the digital operator.	Default: 0 Range: 0, 1	382
o2-09 (050D)	–	–	Factory use.	–	–
o2-19 (061F) <1>	Selection of Parameter Write during Uv	ParameterSet Sel 0: Disabled 1: Enabled	All Modes Selects whether parameter settings can be changed during a DC bus undervoltage condition. To be used with 24 V Power Supply option (PS-A10L, PS-A10H) revision B or later. 0: Disabled 1: Enabled **Note:** Enabling this function may trigger a CPF06 fault when used with a 24 V Power Supply option revision earlier than B, as the parameter changes might not occur correctly.	Default: 0 Range: 0, 1	382

<1> Available in drive software versions PRG: 1019 and later.

◆ o3: Copy Function

No. (Addr. Hex)	Name	LCD Display	Description	Values	Page
o3-01 (0515)	Copy Function Selection	COPY SELECT 0: COPY SELECT 1: INV→OP READ 2: OP→INV WRITE 3: OP←→INV VERIFY	**All Modes** 0: Copy select 1: INV → OP READ (Read parameters from the drive, saving them onto the digital operator). 2: OP → INV WRITE (Copy parameters from the digital operator, writing them to the drive). 3: OP → INV VERIFY (Verify that parameter settings match the data saved on the operator). To read the drive parameter settings into the digital operator, set o3-02 to 1 (to allow reading).	Default: 0 Range: 0 to 3	382
o3-02 (0516)	Copy Allowed Selection	Read Allowable 0: Disabled 1: Enabled	**All Modes** Selects whether the read operation (o3-01 = 1) is enabled or disabled. 0: Read operation prohibited 1: Read operation allowed	Default: 0 Range: 0, 1	383

◆ o4: Maintenance Monitor Settings

No. (Addr. Hex)	Name	LCD Display	Description	Values	Page
o4-01 (050B)	Cumulative Operation Time Setting	DrvElapsTimeCnt	**All Modes** Sets the value for the cumulative operation time of the drive in units of 10 h.	Default: 0 Min.: 0 Max.: 9999	383
o4-02 (050C)	Cumulative Operation Time Selection	ElapsTimeCntSet 0: Power-On Time 1: Running Time	**All Modes** 0: Logs power-on time 1: Logs operation time when the drive output is active (output operation time).	Default: 0 Range: 0, 1	383
o4-03 (050E)	Cooling Fan Operation Time Setting	FanElapsTimeCn	**All Modes** Sets the value of the fan operation time monitor U4-03 in units of 10 h.	Default: 0 Min.: 0 Max.: 9999	383
o4-05 (051D)	Capacitor Maintenance Setting	BusCap Maint Set	**All Modes** Sets the point at which the cumulative timing for the main circuit capacitor maintenance starts. View monitor U4-05 to determine when the capacitors may require replacement.	Default: 0% Min.: 0 Max.: 150	383
o4-07 (0523)	DC Bus Pre-Charge Relay Maintenance Setting	ChrgCircMaintSet	**All Modes** Sets the point at which the cumulative timing for the soft charge bypass relay maintenance starts. View monitor U4-06 to determine when the bypass relay may require replacement.	Default: 0% Min.: 0 Max.: 150	384
o4-09 (0525)	IGBT Maintenance Setting	IGBT Maint Set	**All Modes** Sets the point at which the cumulative timing for the IGBTs maintenance starts. View monitor U4-07 to determine when the IGBTs may require replacement.	Default: 0% Min.: 0 Max.: 150	384
o4-11 (0510)	U2, U3 Initialization	Fault Data Init 0: Disabled 1: Enabled	**All Modes** 0: U2-□□ and U3-□□ monitor data is not reset when the drive is initialized using A1-03. 1: U2-□□ and U3-□□ monitor data is reset when the drive is initialized using A1-03. Parameter is automatically reset to 0.	Default: 0 Range: 0, 1	384
o4-12 (0512)	kWh Monitor Initialization	kWh Monitor Init 0: No Reset 1: Reset	**All Modes** 0: U4-10 and U4-11 monitor data is not reset when the drive is initialized using A1-03. 1: U4-10 and U4-11 monitor data is reset when the drive is initialized using A1-03. Parameter is automatically reset to 0.	Default: 0 Range: 0, 1	384

No. (Addr. Hex)	Name	LCD Display	Description	Values	Page
o4-13 (0528)	Number of Run Commands Counter Initialization	Run Counter Init 0: No Reset 1: Reset	All Modes 0: U4-02 monitor data is not reset when the drive is initialized using A1-03. 1: U4-02 monitor data is reset when the drive is initialized using A1-03. Parameter is automatically reset to 0.	Default: 0 Range: 0, 1	384

B.13 DriveWorksEZ Parameters

◆ q: DriveWorksEZ Parameters

No. (Addr. Hex)	Name	Description	Values	Page
q1-01 to q6-07 (1600 to 1746)	DriveWorksEZ Parameters	All Modes Reserved for DriveWorksEZ	Refer to Help in the DWEZ software.	385

◆ r: DriveWorksEZ Connection Parameters

No. (Addr. Hex)	Name	Description	Values	Page
r1-01 to r1-40 (1840 to 1867)	DriveWorksEZ Connection Parameters 1 to 20 (upper/lower)	All Modes DriveWorksEZ Connection Parameters 1 to 20 (upper/lower)	Default: 0 Min.: 0 Max.: FFFF	385

B.14 T: Motor Tuning

Enter data into the following parameters to tune the motor and drive for optimal performance.

◆ T1: Induction Motor Auto-Tuning

No. (Addr. Hex)	Name	LCD Display	Description	Values	Page
T1-00 (0700)	Motor 1/Motor 2 Selection	Select Motor 1: 1st Motor 2: 2nd Motor	**V/f** **V/f w PG** **OLV** **CLV** OLV/PM AOLV/PM CLV/PM 1: Motor 1 (sets E1-□□, E2-□□) 2: Motor 2 (sets E3-□□, E4-□□)	Default: 1 Range: 1, 2	*183*
T1-01 (0701) <1>	Auto-Tuning Mode Selection	Tuning Mode Sel 0: Standard Tuning 1: Tune-No Rotate1 2: Term Resistance 3: V/f Engy Sav Tun 4: Tune-No Rotate2 5: Tune-No Rotate3 8: Inertia Tuning 9: Tune ASR gain	**V/f** **V/f w PG** **OLV** **CLV** OLV/PM AOLV/PM CLV/PM 0: Rotational Auto-Tuning 1: Stationary Auto-Tuning 1 2: Stationary Auto-Tuning for Line-to-Line Resistance 3: Rotational Auto-Tuning for V/f Control (necessary for Energy Savings and Speed Estimation Speed Search) 4: Stationary Auto-Tuning 2 5: Stationary Auto-Tuning 3 <2> 8: Inertia Tuning (perform Rotational Auto-Tuning prior to Inertia Tuning) 9: ASR Gain Tuning (perform Rotational Auto-Tuning prior to ASR Gain Auto-Tuning) **Note:** 1. Setting 5 is not available in models 4A0930 and 4A1200. 2. Settings 8 and 9 may not be available when gears are between the machine and the motor shaft.	Default: 0 <3> Range: 0 to 5; 8, 9	*184*
T1-02 (0702)	Motor Rated Power	Mtr Rated Power	**V/f** **V/f w PG** **OLV** **CLV** OLV/PM AOLV/PM CLV/PM Sets the motor rated power as specified on the motor nameplate. **Note:** Use the following formula to convert horsepower into kilowatts: 1HP = 0.746 kW.	Default: <4> Min.: 0.00 kW Max.: 650.00 kW	*184*
T1-03 (0703)	Motor Rated Voltage	Rated Voltage	**V/f** **V/f w PG** **OLV** **CLV** OLV/PM AOLV/PM CLV/PM Sets the motor rated voltage as specified on the motor nameplate.	Default: 200.0 V <5> Min: 0.0 Max: 255.0 <5>	*184*
T1-04 (0704)	Motor Rated Current	Rated Current	**V/f** **V/f w PG** **OLV** **CLV** OLV/PM AOLV/PM CLV/PM Sets the motor rated current as specified on the motor nameplate.	Default: <4> Min.: 10% of drive rated current Max.: 200% of drive rated current	*184*
T1-05 (0705)	Motor Base Frequency	Rated Frequency	**V/f** **V/f w PG** **OLV** **CLV** OLV/PM AOLV/PM CLV/PM Sets the rated frequency of the motor as specified on the motor nameplate.	Default: 60.0 Hz Min.: 0.0 Max.: 400.0	*184*
T1-06 (0706)	Number of Motor Poles	Number of Poles	**V/f** **V/f w PG** **OLV** **CLV** OLV/PM AOLV/PM CLV/PM Sets the number of motor poles as specified on the motor nameplate.	Default: 4 Min.: 2 Max.: 48	*185*
T1-07 (0707)	Motor Base Speed	Rated Speed	**V/f** **V/f w PG** **OLV** **CLV** OLV/PM AOLV/PM CLV/PM Sets the rated speed of the motor as specified on the motor nameplate.	Default: 1750 r/min Min.: 0 Max.: 24000	*184*

No. (Addr. Hex)	Name	LCD Display	Description	Values	Page
T1-08 (0708)	PG Number of Pulses Per Revolution	PG Pulses/Rev	V/f, V/f w PG, OLV, **CLV**, OLV/PM, AOLV/PM, CLV/PM Sets the number of pulses per revolution for the PG being used (pulse generator or encoder).	Default: 1024 ppr Min.: 1 Max.: 60000	*184*
T1-09 (0709)	Motor No-Load Current (Stationary Auto-Tuning)	No-Load Current	V/f, V/f w PG, **OLV**, **CLV**, OLV/PM, AOLV/PM, CLV/PM Sets the no-load current for the motor. After setting the motor capacity to T1-02 and the motor rated current to T1-04, this parameter will automatically display the no-load current for a standard 4-pole Yaskawa motor. Enter the no-load current as indicated on the motor test report.	Default: – Min.: 0 A Max.: T1-04	*185*
T1-10 (070A)	Motor Rated Slip (Stationary Auto-Tuning)	Motor Rated Slip	V/f, V/f w PG, **OLV**, **CLV**, OLV/PM, AOLV/PM, CLV/PM Sets the motor rated slip. After setting the motor capacity to T1-02, this parameter will automatically display the motor slip for a standard 4-pole Yaskawa motor. Enter the motor slip as indicated on the motor test report.	Default: – Min.: 0.00 Hz Max.: 20.00 Hz	*185*
T1-11 (070B)	Motor Iron Loss	Mtr Iron Loss(W)	**V/f**, **V/f w PG**, OLV, CLV, OLV/PM, AOLV/PM, CLV/PM Sets the iron loss for determining the Energy Saving coefficient. The value is set to E2-10 (motor iron loss) set when the power is cycled. If T1-02 is changed, a default value appropriate for the motor capacity that was entered will appear.	Default: 14 W <6> Min.: 0 Max.: 65535	*185*

<1> The availability of certain Auto-Tuning methods is determined by the control mode selected for the drive.

<2> Available in drive software versions PRG: 1019 and later.

<3> Default setting is determined by parameter A1-02, Control Method Setting.

<4> Default setting is determined by parameter o2-04, Drive Model Selection.

<5> Values shown are specific to 200 V class drives. Double the value for 400 V class drives. Multiply the value by 2.875 for 600 V class drives.

<6> Default setting value differs depending on the motor code value and motor parameter settings.

◆ T2: PM Motor Auto-Tuning

No. (Addr. Hex)	Name	LCD Display	Description	Values	Page
T2-01 (0750)	PM Motor Auto-Tuning Mode Selection	PM Tuning Mode 0: Standard Tuning 1: Tune-No Rotate 2: Term Resistance 3: Z-Pulse Tuning 8: Inertia Tuning 9: Tune ASR gain 11: IndVoltConstTun 13: High Freq Tun 14: PM rotation tune	V/f, V/f w PG, OLV, CLV **OLV/PM, AOLV/PM, CLV/PM** 0: PM Motor Parameter Settings 1: PM Stationary Auto-Tuning 2: PM Stationary Auto-Tuning for Stator Resistance 3: Z Pulse Offset Tuning 8: Inertia Tuning 9: ASR Gain Auto-Tuning 11: Back EMF Constant Tuning <2> 13: High Frequency Injection Parameter Tuning <3> 14: PM Rotational Auto-Tuning <4> **Note:** 1. Settings 13 and 14 are not available in models 4A0930 and 4A1200. 2. Settings 8 and 9 may not be available when gears are between the machine and the motor shaft. 3. For special-purpose motors, Yaskawa recommends Back EMF Constant Tuning after performing Stationary Auto-Tuning. Back EMF Constant Tuning rotates the motor to measure the actual induction voltage constants, and allows for more accurate control than Stationary Auto-Tuning alone.	Default: 0 Range: 0 to 3; 8, 9, 11, 13, 14 <4>	*186*
T2-02 (0751)	PM Motor Code Selection	PM Mtr Code Sel	V/f, V/f w PG, OLV, CLV **OLV/PM, AOLV/PM, CLV/PM** Enter the motor code when using a Yaskawa PM motor. After entering the motor code, the drive automatically sets parameters T2-03 through T2-09. Set T2-10 through T2-14 from the values on the motor nameplate or from the motor test report. When using a motor without a supported motor code or a non-Yaskawa motor, set FFFF and adjust the other T2 parameters according to the motor nameplate or the motor test report.	Default: <5> Min: 0000 Max: FFFF	*186*
T2-03 (0752)	PM Motor Type	PM Motor Type 0: IPM motor 1: SPM motor	V/f, V/f w PG, OLV, CLV **OLV/PM, AOLV/PM, CLV/PM** 0: IPM motor 1: SPM motor.	Default: 1 Range: 0, 1	*186*
T2-04 (0730)	PM Motor Rated Power	Mtr Rated Power	V/f, V/f w PG, OLV, CLV **OLV/PM, AOLV/PM, CLV/PM** Sets the motor rated power. **Note:** Use the following formula to convert horsepower into kilowatts: 1HP = 0.746 kW.	Default: <6> Min.: 0.00 kW Max.: 650.00 kW	*186*
T2-05 (0732)	PM Motor Rated Voltage	Rated Voltage	V/f, V/f w PG, OLV, CLV **OLV/PM, AOLV/PM, CLV/PM** Enter the motor rated voltage as indicated on the motor nameplate.	Default: 200.0 V <7> Min.: 0.0 Max.: 255.0 <7>	*187*
T2-06 (0733)	PM Motor Rated Current	Rated Current	V/f, V/f w PG, OLV, CLV **OLV/PM, AOLV/PM, CLV/PM** Enter the motor rated current as indicated on the motor nameplate.	Default: <6> Min.: 10% of drive rated current Max.: 200% of drive rated current	*187*
T2-07 (0753)	PM Motor Base Frequency	Base Frequency	V/f, V/f w PG, OLV, CLV **OLV/PM**, AOLV/PM, CLV/PM Enter the motor base frequency as indicated on the motor nameplate.	Default: 87.5 Hz Min.: 0.0 Max.: 400.0	*187*

No. (Addr. Hex)	Name	LCD Display	Description	Values	Page
T2-08 (0734)	Number of PM Motor Poles	Number of Poles	V/f V/f w PG OLV CLV **OLV/PM** **AOLV/PM** **CLV/PM** Enter the number of motor poles for the PM motor as indicated on the motor nameplate.	Default: 6 Min.: 2 Max.: 48	*187*
T2-09 (0731)	PM Motor Base Speed	Rated Speed	V/f V/f w PG OLV CLV OLV/PM **AOLV/PM** **CLV/PM** Enter the base speed for the PM motor as indicated on the motor nameplate.	Default: 1750 r/min Min.: 0 Max.: 24000	*187*
T2-10 (0754)	PM Motor Stator Resistance	Arm Resistance	V/f V/f w PG OLV CLV **OLV/PM** **AOLV/PM** **CLV/PM** Enter the rotor resistance for the PM motor as indicated on the motor nameplate.	Default: <8> Min.: 0.000 Ω Max.: 65.000 Ω	*187*
T2-11 (0735)	PM Motor d-Axis Inductance	d-Axis Induct	V/f V/f w PG OLV CLV **OLV/PM** **AOLV/PM** **CLV/PM** Enter the d-axis inductance for the PM motor as indicated on the motor nameplate.	Default: <8> Min.: 0.00 mH Max.: 600.00 mH	*187*
T2-12 (0736)	PM Motor q-Axis Inductance	q-Axis Induct	V/f V/f w PG OLV CLV **OLV/PM** **AOLV/PM** **CLV/PM** Enter the q-axis inductance for the PM motor as indicated on the motor nameplate.	Default: <8> Min.: 0.00 mH Max.: 600.00 mH	*187*
T2-13 (0755)	Induced Voltage Constant Unit Selection	Iduct Volt Unit 0: mV/RPM 1: mV/(rad/sec)	V/f V/f w PG OLV CLV **OLV/PM** **AOLV/PM** **CLV/PM** 0: mV/(r/min). E5-09 will automatically be set to 0.0, and E5-24 will be used. 1: mV/(rad/sec). E5-24 will automatically be set to 0.0, and E5-09 will be used.	Default: 1 Range: 0, 1	*188*
T2-14 (0737)	PM Motor Induced Voltage Constant	Induct Volt Coef	V/f V/f w PG OLV CLV **OLV/PM** **AOLV/PM** **CLV/PM** Enter the induced voltage coefficient for the PM motor as indicated on the motor nameplate.	Default: <8> Min.: 0.0 Max.: 2000.0	*188*
T2-15 (0756)	Pull-In Current Level for PM Motor Tuning	Pull-In I Lvl	V/f V/f w PG OLV CLV **OLV/PM** **AOLV/PM** **CLV/PM** Sets the amount of pull-in current to use for Auto-Tuning as a percentage of the motor rated current. Increase this setting for high inertia loads.	Default: 30% Min.: 0 Max.: 120	*188*
T2-16 (0738)	PG Number of Pulses Per Revolution for PM Motor Tuning	PG Pulses/Rev	V/f V/f w PG OLV CLV OLV/PM AOLV/PM **CLV/PM** Sets the number of pulses per revolution for the PG being used (pulse generator or encoder).	Default: 1024 ppr Min.: 1 Max.: 15000	*188*
T2-17 (0757)	Encoder Z-Pulse Offset	Z-Pulse Offset	V/f V/f w PG OLV CLV OLV/PM AOLV/PM **CLV/PM** Sets the offset between encoder offset and the rotor magnetic axis.	Default: 0.0 deg Min.: -180.0 Max.: 180.0	*188*

<1> The availability of certain Auto-Tuning methods is determined by the control mode selected for the drive.
<2> Available in drive software versions PRG: 1015 and later.
<3> Available in drive software versions PRG: 1018 and later.
<4> Available in drive software versions PRG: 1019 and later.
<5> Default setting is determined by parameters A1-02, Control Method Selection, and o2-04, Drive Model Selection.
<6> Default setting is determined by parameter o2-04, Drive Model Selection.
<7> Values shown are specific to 200 V class drives. Double the value for 400 V class drives. Multiply the value by 2.875 for 600 V class drives.
<8> Default setting is determined by parameter T2-02, PM Motor Code Selection, and the drive capacity.

◆ T3: ASR and Inertia Tuning

No. (Addr. Hex)	Name	LCD Display	Description	Values	Page
T3-01 (0760)	Inertia Tuning Frequency Reference	Test Signal Freq	V/f, V/f w PG, OLV, **CLV**, OLV/PM, AOLV/PM, **CLV/PM** Sets the frequency of the test signal used during Inertia Tuning and ASR Gain Auto-Tuning. Reduce this value if the inertia is large or if a fault occurs.	Default: 3.0 Hz Min.: 0.1 Max.: 20.0	189
T3-02 (0761)	Inertia Tuning Reference Amplitude	Test Signal Ampl	V/f, V/f w PG, OLV, **CLV**, OLV/PM, AOLV/PM, **CLV/PM** Sets the amplitude of the test signal used during Inertia and ASR Gain Auto-Tuning. Reduce this value if the inertia is too large or if a fault occurs.	Default: 0.5 rad Min.: 0.1 Max.: 10.0	189
T3-03 (0762)	Motor Inertia	Motor Inertia	V/f, V/f w PG, OLV, **CLV**, OLV/PM, AOLV/PM, **CLV/PM** Sets the motor inertia. Default setting is the inertia of a Yaskawa motor.	Default: <2> <3> Min.: 0.0001 kgm^2 Max.: 600.00 kgm^2	189
T3-04 (0763) <1>	ASR Response Frequency	System Resp Freq	V/f, V/f w PG, OLV, **CLV**, OLV/PM, AOLV/PM, **CLV/PM** Sets the response frequency of the mechanical system connected to the motor. Oscillation may result if set too high.	Default: 10.0 Hz Min.: 0.1 Max.: 50.0	189

<1> Displayed only when performing Inertia Tuning or ASR Gain Auto-Tuning (T1-01 = 8 or T2-01 = 9).

<2> Default setting is determined by parameter E5-01, Motor Code Selection.

<3> Default setting is determined by parameters C6-01, Drive Duty Selection, and o2-04, Drive Model Selection.

B.15 U: Monitors

Monitor parameters allow the user to view drive status, fault information, and other data concerning drive operation.

◆ U1: Operation Status Monitors

No. (Addr. Hex)	Name		Description	Analog Output Level	Unit
U1-01 (0040)	Frequency Reference	Frequency Ref	All Modes Monitors the frequency reference. Display units are determined by o1-03.	10 V: Max frequency (-10 to +10 V)	0.01 Hz
U1-02 (0041)	Output Frequency	Output Freq	All Modes Displays the output frequency. Display units are determined by o1-03.	10 V: Max frequency (-10 to +10 V)	0.01 Hz
U1-03 (0042)	Output Current	Output Current	All Modes Displays the output current. **Note:** The unit is expressed in 1 A for models 4A0930 and 4A1200.	10 V: Drive rated current	<1> <2>
U1-04 (0043)	Control Method	Control Method	All Modes 0: V/f Control 1: V/f Control with PG 2: Open Loop Vector Control 3: Closed Loop Vector Control 5: Open Loop Vector Control for PM 6: Advanced Open Loop Vector Control for PM 7: Closed Loop Vector Control for PM	No signal output available	–
U1-05 (0044)	Motor Speed	Motor Speed	V/f V/f w PG OLV CLV OLV/PM AOLV/PM CLV/PM Displays the motor speed feedback. Display units are determined by o1-03.	10 V: Max frequency (-10 to +10 V)	0.01 Hz
U1-06 (0045)	Output Voltage Reference	Output Voltage	All Modes Displays the output voltage.	10 V: 200 Vrms <3>	0.1 Vac
U1-07 (0046)	DC Bus Voltage	DC Bus Voltage	All Modes Displays the DC bus voltage.	10 V: 400 V <3>	1 Vdc
U1-08 (0047)	Output Power	Output kWatts	All Modes Displays the output power (this value is calculated internally).	10 V: Drive capacity (motor capacity) kW (-10 to +10 V) <4>	<4>
U1-09 (0048)	Torque Reference	Torque Reference	V/f V/f w PG OLV CLV OLV/PM AOLV/PM CLV/PM Monitors the internal torque reference.	10 V: Motor rated torque (-10 to +10 V)	0.1%

No. (Addr. Hex)	Name		Description	Analog Output Level	Unit
U1-10 (0049)	Input Terminal Status	Input Term Sts	All Modes Displays the input terminal status. U1-10=00000000 1 Digital input 1 (terminal S1 enabled) 1 Digital input 2 (terminal S2 enabled) 1 Digital input 3 (terminal S3 enabled) 1 Digital input 4 (terminal S4 enabled) 1 Digital input 5 (terminal S5 enabled) 1 Digital input 6 (terminal S6 enabled) 1 Digital input 7 (terminal S7 enabled) 1 Digital input 8 (terminal S8 enabled)	No signal output available	–
U1-11 (004A)	Output Terminal Status	Output Term Sts	All Modes Displays the output terminal status. U1-11=00000000 1 Multi-Function Digital Output (terminal M1-M2) 1 Multi-Function Digital Output (terminal M3-M4) 1 Multi-Function Digital Output (terminal M5-M6) 0 Not Used 1 Fault Relay (terminal MA-MC closed MA-MC open)	No signal output available	–
U1-12 (004B)	Drive Status	Int Ctl Sts 1	All Modes Displays the drive operation status. U1-12=00000000 1 During run 1 During zero-speed 1 During REV 1 During fault reset signal input 1 During speed agree 1 Drive ready 1 During alarm detection 1 During fault detection	No signal output available	–
U1-13 (004E)	Terminal A1 Input Level	Term A1 Level	All Modes Displays the signal level to analog input terminal A1.	10 V: 100% (-10 to +10 V)	0.1%
U1-14 (004F)	Terminal A2 Input Level	Term A2 Level	All Modes Displays the signal level to analog input terminal A2.	10 V: 100% (-10 to +10 V)	0.1%
U1-15 (0050)	Terminal A3 Input Level	Term A3 Level	All Modes Displays the signal level to analog input terminal A3.	10 V: 100% (-10 to +10 V)	0.1%
U1-16 (0053)	Output Frequency after Soft Starter	SFS Output	All Modes Displays output frequency with ramp time and S-curves. Units determined by o1-03.	10 V: Max frequency (-10 to +10 V)	0.01 Hz

No. (Addr. Hex)	Name		Description	Analog Output Level	Unit
U1-17 (0058)	DI-A3 Input Status	DI Opt Status	All Modes Displays the reference value input from the DI-A3 option card. Display will appear in hexadecimal as determined by the digital card input selection in F3-01. 3FFFF: Set (1 bit) + sign (1 bit) + 16 bit	No signal output available	–
U1-18 (0061)	oPE Fault Parameter	OPE Error Code	All Modes Displays the parameter number that caused the oPE02 or oPE08 operation error.	No signal output available	–
U1-19 (0066)	MEMOBUS/Modbus Error Code	Transmit Err	All Modes Displays the contents of a MEMOBUS/Modbus error. U1-19=00000000 1 CRC Error 1 Data Length Error 0 Not Used 1 Parity Error 1 Overrun Error 1 Framing Error 1 Timed Out 0 Not Used	No signal output available	–
U1-21 (0077)	AI-A3 Terminal V1 Input Voltage Monitor	AI Opt Ch1 Level	All Modes Displays the input voltage to terminal V1 on analog input card AI-A3.	10 V: 100% (-10 to +10 V)	0.1%
U1-22 (072A)	AI-A3 Terminal V2 Input Voltage Monitor	AI Opt Ch2 Level	All Modes Displays the input voltage to terminal V2 on analog input card AI-A3.	10 V: 100% (-10 to +10 V)	0.1%
U1-23 (072B)	AI-A3 Terminal V3 Input Voltage Monitor	AI Opt Ch3 Level	All Modes Displays the input voltage to terminal V3 on analog input card AI-A3.	10 V: 100% (-10 to +10 V)	0.1%
U1-24 (007D)	Input Pulse Monitor	Term RP Inp Freq	All Modes Displays the frequency to pulse train input terminal RP.	Determined by H6-02	1 Hz
U1-25 (004D)	Software Number (Flash)	CPU 1 SW Number	All Modes FLASH ID	No signal output available	–
U1-26 (005B)	Software No. (ROM)	CPU 2 SW Number	All Modes ROM ID	No signal output available	–
U1-27 (07A8)	Message ID (OPR)	MessageID (OPR)	All Modes OPR ID	No signal output available	–
U1-28 (07A9)	Message ID (INV)	MessageID (INV)	All Modes INV ID	No signal output available	–
U1-29 (07AA)	Software No. (PWM)	CPU 3 SW Number	All Modes PWM ID **Note:** This monitor is only displayed in models 4A0930 and 4A1200.	No signal output available	–

<1> Display is in the following units:
2A0004 to 2A0040, 4A0002 to 4A0023, and 5A0007 to 5A0017: 0.01 A units.
2A0056 to 2A0415, 4A0031 to 4A0675, and 5A0022 to 5A0242: 0.1 A units.
4A0930 and 4A1200: 1 A units.

<2> The values of U1-03, U2-05, and U4-13 are displayed on the digital operator in units of amperes. When those monitors are checked using MEMOBUS/Modbus communications, the monitor values in MEMOBUS/Modbus communications are displayed as: numeric value / 8192 × drive rated current (A) from the condition “192 (maximum value) = drive rated current (A)”

<3> Values shown are specific to 200 V class drives. Double the value for 400 V class drives. Multiply the value by 2.875 for 600 V class drives.

<4> In V/f and V/f w/PG control modes, 10 V = drive capacity (kW). In OLV, CLV, OLV/PM, AOLV/PM, and CLV/PM control modes, 10 V = motor rated power (E2-11) (kW).

◆ U2: Fault Trace

No. (Addr. Hex)	Name	LCD Display	Description	Analog Output Level	Unit
U2-01 (0080)	Current Fault	Current Fault	**All Modes** Displays the current fault.	No signal output available	–
U2-02 (0081)	Previous Fault	Last Fault	**All Modes** Displays the previous fault.	No signal output available	–
U2-03 (0082)	Frequency Reference at Previous Fault	Frequency Ref	**All Modes** Displays the frequency reference at the previous fault.	No signal output available	0.01 Hz
U2-04 (0083)	Output Frequency at Previous Fault	Output Freq	**All Modes** Displays the output frequency at the previous fault.	No signal output available	0.01 Hz
U2-05 (0084)	Output Current at Previous Fault	Output Current	**All Modes** Displays the output current at the previous fault. **Note:** The unit is expressed in 1 A for models 4A0930 and 4A1200.	No signal output available	<1> <2>
U2-06 (0085)	Motor Speed at Previous Fault	Motor Speed	V/f, **V/f w PG**, **OLV**, **CLV**, OLV/PM, **AOLV/PM**, **CLV/PM** Displays the motor speed at the previous fault.	No signal output available	0.01 Hz
U2-07 (0086)	Output Voltage at Previous Fault	Output Voltage	**All Modes** Displays the output voltage at the previous fault.	No signal output available	0.1 Vac
U2-08 (0087)	DC Bus Voltage at Previous Fault	DC Bus Voltage	**All Modes** Displays the DC bus voltage at the previous fault.	No signal output available	1 Vdc
U2-09 (0088)	Output Power at Previous Fault	Output kWatts	**All Modes** Displays the output power at the previous fault.	No signal output available	0.1 kW
U2-10 (0089)	Torque Reference at Previous Fault	Torque Reference	V/f, V/f w PG, **OLV**, **CLV**, OLV/PM, **AOLV/PM**, **CLV/PM** Displays the torque reference at the previous fault.	No signal output available	0.1%
U2-11 (008A)	Input Terminal Status at Previous Fault	Input Term Sts	**All Modes** Displays the input terminal status at the previous fault. Displayed as in U1-10.	No signal output available	–
U2-12 (008B)	Output Terminal Status at Previous Fault	Output Term Sts	**All Modes** Displays the output status at the previous fault. Displayed as in U1-11.	No signal output available	–
U2-13 (008C)	Drive Operation Status at Previous Fault	Inverter Status	**All Modes** Displays the operation status of the drive at the previous fault. Displayed as in U1-12.	No signal output available	–
U2-14 (008D)	Cumulative Operation Time at Previous Fault	Elapsed time	**All Modes** Displays the cumulative operation time at the previous fault.	No signal output available	1 h
U2-15 (07E0)	Run Speed after Soft Starter at Previous Fault	SFS Output	**All Modes** Displays the run speed after a soft start when a previous fault occurred. Displayed as in U1-16.	No signal output available	0.01 Hz
U2-16 (07E1)	Motor q-Axis Current at Previous Fault	Motor Iq Current	**All Modes** Displays the q-Axis current for the motor at the previous fault. Displayed as in U6-01.	No signal output available	0.1%
U2-17 (07E2)	Motor d-Axis Current at Previous Fault	Motor Id Current	V/f, V/f w PG, **OLV**, **CLV**, **OLV/PM**, **AOLV/PM**, **CLV/PM** Displays the d-Axis current for the motor at the previous fault. Displayed as in U6-02.	No signal output available	0.1%
U2-19 (07E4)	Rotor Deviation at Previous Fault	d-q Axis Dev Err	V/f, V/f w PG, OLV, CLV, OLV/PM, **AOLV/PM**, CLV/PM Displays the degree of rotor deviation when the most recent fault occurred. Displayed as in U6-10.	No signal output available	0.1 deg

No. (Addr. Hex)	Name	LCD Display	Description	Analog Output Level	Unit
U2-20 (008E)	Heatsink Temperature at Previous Fault	Actual Fin Temp	All Modes Displays the temperature of the heatsink when the most recent fault occurred. Displayed as in U4-08.	No signal output available	1 °C
U2-27 (07FA)	Motor Temperature at Previous Fault (NTC)	Moter temp (NTC)	All Modes Displays the temperature of the motor when the most recent fault occurred. Displayed as in U4-32. **Note:** This monitor is only displayed in models 4A0930 and 4A1200.	No signal output available	1 °C
U2-28 (07FC)	Malfunctioned Module	Fault Axis	All Modes Display the module where the previous fault occurred at a decimal number. **Note:** This monitor is only displayed in models 4A0930 and 4A1200.	No signal output available	–

<1> Display is in the following units:
2A0004 to 2A0040, 4A0002 to 4A0023, and 5A0007 to 5A0017: 0.01 A units.
2A0056 to 2A0415, 4A0031 to 4A0675, and 5A0022 to 5A0242: 0.1 A units.
4A0930 and 4A1200: 1 A units.

<2> The values of U1-03, U2-05, and U4-13 are displayed on the digital operator in units of amperes. When those monitors are checked using MEMOBUS/Modbus communications, the monitor values in MEMOBUS/Modbus communications are displayed as: numeric value / 8192 × drive rated current (A) from the condition “192 (maximum value) = drive rated current (A)”

◆ U3: Fault History

No. (Addr. Hex)	Name	LCD Display	Description	Analog Output Level	Unit
U3-01 to U3-04 (0090 to 0093 (0800 to 0803))	1st to 4th Most Recent Fault	Fault Message ☐	All Modes Displays the first to the fourth most recent faults.	No signal output available	–
U3-05 to U3-10 (0804 to 0809)	5th to 10th Most Recent Fault	Fault Message ☐	All Modes Displays the fifth to the tenth most recent faults. After ten faults, data for the oldest fault is deleted. The most recent fault appears in U3-01, with the next most recent fault appearing in U3-02. The data is moved to the next monitor parameter each time a fault occurs.	No signal output available	–
U3-11 to U3-14 (0094 to 0097 (080A to 080D))	Cumulative Operation Time at 1st to 4th Most Recent Fault	Elapsed Time ☐	All Modes Displays the cumulative operation time when the first to the fourth most recent faults occurred.	No signal output available	1 h
U3-15 to U3-20 (080E to 0813)	Cumulative Operation Time at 5th to 10th Most Recent Fault	Elapsed Time ☐	All Modes Displays the cumulative operation time when the fifth to the tenth most recent faults occurred.	No signal output available	1 h

◆ U4: Maintenance Monitors

No. (Addr. Hex)	Name	LCD Display	Description	Analog Output Level	Unit
U4-01 (004C) <1>	Cumulative Operation Time	Drv Elapsed Time	All Modes Displays the cumulative operation time of the drive. The value for the cumulative operation time counter can be reset in parameter o4-01. Use parameter o4-02 to determine if the operation time should start as soon as the power is switched on or only while the Run command is present. The maximum number displayed is 99999, after which the value is reset to 0.	No signal output available	1 h
U4-02 (0075)	Number of Run Commands	RUN Cmd Counter	All Modes Displays the number of times the Run command is entered. Reset the number of Run commands using parameter o4-13. This value will reset to 0 and start counting again after reaching 65535.	No signal output available	1 Time
U4-03 (0067) <2>	Cooling Fan Operation Time	Fan Elapsed TIme	All Modes Displays the cumulative operation time of the cooling fan. The default value for the fan operation time is reset in parameter o4-03. This value will reset to 0 and start counting again after reaching 99999.	No signal output available	1 h
U4-04 (007E)	Cooling Fan Maintenance	Fan Life Mon	All Modes Displays main cooling fan usage time as a percentage of its expected performance life. Parameter o4-03 can be used to reset this monitor. Replace the fan when this monitor reaches 90%.	No signal output available	1%
U4-05 (007C)	Capacitor Maintenance	Cap Life Mon	All Modes Displays main circuit capacitor usage time as a percentage of their expected performance life. Parameter o4-05 can be used to reset this monitor. Replace the capacitor when this monitor reaches 90%.	No signal output available	1%
U4-06 (07D6)	Soft Charge Bypass Relay Maintenance	ChgCirc Life Mon	All Modes Displays the soft charge bypass relay maintenance time as a percentage of its estimated performance life. Parameter o4-07 can be used to reset this monitor. Replace the soft charge bypass relay when this monitor reaches 90%.	No signal output available	1%
U4-07 (07D7)	IGBT Maintenance	IGBT Life Mon	All Modes Displays IGBT usage time as a percentage of the expected performance life. Parameter o4-09 can be used to reset this monitor. Replace the IGBT when this monitor reaches 90%.	No signal output available	1%
U4-08 (0068)	Heatsink Temperature	Heatsink Temp	All Modes Displays the heatsink temperature.	10 V: 100 °C	1 °C
U4-09 (005E)	LED Check	LED Oper Check	All Modes Lights all segments of the LED to verify that the display is working properly.	No signal output available	–
U4-10 (005C)	kWh, Lower 4 Digits	kWh Lower 4 dig	All Modes Monitors the drive cumulative output power usage. The value is shown as a 9-digit number displayed across two monitors U4-10 and U4-11. Example: 12345678.9 kWh is displayed as: U4-10: 678.9 kWh U4-11: 12345 MWh	No signal output available	1 kWh
U4-11 (005D)	kWh, Upper 5 Digits	kWh Upper 5 dig		No signal output available	1 MWh
U4-13 (07CF)	Peak Hold Current	Current PeakHold	All Modes Displays the highest current value that occurred during run. **Note:** The unit is expressed in 1 A for models 4A0930 and 4A1200.	No signal output available	0.01 A <3> <4> <5>

No. (Addr. Hex)	Name	LCD Display	Description	Analog Output Level	Unit
U4-14 (07D0)	Peak Hold Output Frequency	Freq@ I PeakHold	All Modes Displays the output frequency when the current value shown in U4-13 occurred.	No signal output available	0.01 Hz
U4-16 (07D8)	Motor Overload Estimate (oL1)	Motor OL1 Level	All Modes Shows the value of the motor overload detection accumulator. 100% is equal to the oL1 detection level.	10 V: 100%	0.1%
U4-18 (07DA)	Frequency Reference Source Selection	Reference Source	All Modes Displays the source for the frequency reference as XY-nn. **X: indicates which reference is used:** 1 = Reference 1 (b1-01) 2 = Reference 2 (b1-15) **Y-nn: indicates the reference source** 0-01 = Digital operator 1-00 = Analog 1-01 = Analog (terminal A1) 1-02 = Analog (terminal A2) 1-03 = Analog (terminal A3) 2-02 to 17 = Multi-step speed (d1-02 to 17) 3-01 = MEMOBUS/Modbus communications 4-01 = Communication option card 5-01 = Pulse input 7-01 = DWEZ 9-01 = Up/Down Command	No signal output available	–
U4-19 (07DB)	Frequency Reference from MEMOBUS/ Modbus Comm.	MEMOBUS Freq Ref	All Modes Displays the frequency reference provided by MEMOBUS/ Modbus (decimal).	No signal output available	0.01%
U4-20 (07DC)	Option Frequency Reference	Option Freq Ref	All Modes Displays the frequency reference input by an option card (decimal).	No signal output available	–
U4-21 (07DD)	Run Command Source Selection	Run Cmd Source	All Modes Displays the source for the Run command as XY-nn. **X: Indicates which Run source is used:** 1 = Reference 1 (b1-02) 2 = Reference 2 (b1-16) **Y: Input power supply data** 0 = Digital operator 1 = External terminals 3 = MEMOBUS/Modbus communications 4 = Communication option card 7 = DWEZ **nn: Run command limit status data** 00: No limit status. 01: Run command was left on when stopped in the PRG mode 02: Run command was left on when switching from LOCAL to REMOTE operation 03: Waiting for soft charge bypass contactor after power up (Uv or Uv1 flashes after 10 s) 04: Waiting for “Run command prohibited” time period to end 05: Fast Stop (digital input, digital operator) 06: b1-17 (Run command given at power-up) 07: During baseblock while coast to stop with timer 08: Frequency reference is below minimal reference during baseblock 09: Waiting for Enter command	No signal output available	–
U4-22 (07DE)	MEMOBUS/Modbus Communications Reference	MEMOBUS Ref Reg	All Modes Displays the drive control data set by MEMOBUS/Modbus communications register no. 0001H as a four-digit hexadecimal number.	No signal output available	–
U4-23 (07DF)	Communication Option Card Reference	Option Ref Reg	All Modes Displays drive control data set by an option card as a four-digit hexadecimal number.	No signal output available	–

No. (Addr. Hex)	Name	LCD Display	Description	Analog Output Level	Unit
U4-32 (07FB)	Motor Temperature (NTC)	Moter temp (NTC)	All Modes Displays the motor temperature (NTC). U4-32 will display “20 °C” when a multi-function analog input is not set for motor thermistor input (H1-□□ = 17H). **Note:** This monitor is only displayed in models 4A0930 and 4A1200.	200 °C	1 °C
U4-37 (1044)	oH Alarm Location Monitor	OH Alarm Axis	All Modes Displays the module where the oH alarm occurred as a binary number. **Note:** This monitor is only displayed in models 4A0930 and 4A1200.	No signal output available	–
U4-38 (1045)	FAn Alarm Location Monitor	FAN Alarm Axis	All Modes Displays the module where the FAn alarm occurred as a binary number. **Note:** This monitor is only displayed in models 4A0930 and 4A1200.	No signal output available	–
U4-39 (1046)	voF Alarm Location Monitor	VOF Alarm Axis	All Modes Displays the module where the voF alarm occurred as a binary number. **Note:** This monitor is only displayed in models 4A0930 and 4A1200.	No signal output available	–

<1> The MEMOBUS/Modbus communications data is in 10 h units. If data in 1 h units are also required, refer to register number 0099H.

<2> The MEMOBUS/Modbus communications data is in 10 h units. If data in 1 h units are also required, refer to register number 009BH.

<3> Display is in the following units:
2A0004 to 2A0040, 4A0002 to 4A0023, and 5A0007 to 5A0017: 0.01 A units.
2A0056 to 2A0415, 4A0031 to 4A0675, and 5A0022 to 5A0242: 0.1 A units.
4A0930 and 4A1200: 1 A units.

<4> The values of U1-03, U2-05, and U4-13 are displayed on the digital operator in units of amperes. When those monitors are checked using MEMOBUS/Modbus communications, the monitor values in MEMOBUS/Modbus communications are displayed as: numeric value / 8192 × drive rated current (A) from the condition “192 (maximum value) = drive rated current (A)”

<5> When reading the value of this monitor via MEMOBUS/Modbus a value of 8192 is equal to 100% of the drive rated output current.

◆ U5: PID Monitors

No. (Addr. Hex)	Name	LCD Display	Description	Analog Output Level	Unit
U5-01 (0057)	PID Feedback	PID Feedback 1	All Modes Displays the PID feedback value.	10 V: 100% (-10 to +10 V)	0.01%
U5-02 (0063)	PID Input	PID Input	All Modes Displays the amount of PID input (deviation between PID setpoint and feedback).	10 V: 100% (-10 to +10 V)	0.01%
U5-03 (0064)	PID Output	PID Output	All Modes Displays PID control output.	10 V: 100% (-10 to +10 V)	0.01%
U5-04 (0065)	PID Setpoint	PID Setpoint	All Modes Displays the PID setpoint.	10 V: 100% (-10 to +10 V)	0.01%
U5-05 (07D2)	PID Differential Feedback	PID Feedback 2	All Modes Displays the 2nd PID feedback value if differential feedback is used (H3-□□ = 16).	10 V: 100% (-10 to +10 V)	0.01%
U5-06 (07D3)	PID Adjusted Feedback	PID Diff Fdbk	All Modes Displays the difference of both feedback values if differential feedback is used (U5-01 - U5-05). If differential feedback is not used, then U5-01 and U5-06 will be the same.	10 V: 100% (-10 to +10 V)	0.01%

No. (Addr. Hex)	Name	LCD Display	Description	Analog Output Level	Unit
U5-21 (0872) <1>	Automatically Calculated Energy Saving Coefficient Ki Value	Ki Auto Cal Val	V/f, V/f w PG, OLV, CLV, OLV/PM, **AOLV/PM**, **CLV/PM** Displays the energy saving coefficient Ki value.	No signal output available	0.01
U5-22 (0873) <1>	Automatically Calculated Energy Saving Coefficient Kt Value	Kt Auto Cal Val	V/f, V/f w PG, OLV, CLV, OLV/PM, **AOLV/PM**, **CLV/PM** Displays the energy saving coefficient Kt value.	No signal output available	0.01

<1> Available in drive software versions PRG: 1015 and later.

◆ U6: Operation Status Monitors

No. (Addr. Hex)	Name	LCD Display	Description	Analog Output Level	Unit
U6-01 (0051)	Motor Secondary Current (Iq)	Mot SEC Current	**All Modes** Displays the value of the motor secondary current (Iq). Motor rated secondary current is 100%.	10 V: Motor secondary rated current (-10 to +10 V)	0.1%
U6-02 (0052)	Motor Excitation Current (Id)	Mot EXC Current	V/f, V/f w PG, **OLV**, **CLV**, **OLV/PM**, **AOLV/PM**, **CLV/PM** Displays the value calculated for the motor excitation current (Id). Motor rated secondary current is 100%.	10 V: Motor secondary rated current (-10 to +10 V)	0.1%
U6-03 (0054)	ASR Input	ASR Input	V/f, **V/f w PG**, OLV, **CLV**, OLV/PM, **AOLV/PM**, **CLV/PM** Displays the input and output values when using ASR control.	10 V: Max frequency (-10 to +10 V)	0.01%
U6-04 (0055)	ASR Output	ASR Output		10 V: Motor secondary rated current (-10 to +10 V)	
U6-05 (0059)	Output Voltage Reference (Vq)	Voltage Ref (Vq)	V/f, V/f w PG, **OLV**, **CLV**, **OLV/PM**, **AOLV/PM**, **CLV/PM** Output voltage reference (Vq) for the q-Axis.	10 V: 200 Vrms (-10 to +10 V) <1>	0.1 Vac
U6-06 (005A)	Output Voltage Reference (Vd)	Voltage Ref (Vd)	V/f, V/f w PG, **OLV**, **CLV**, **OLV/PM**, **AOLV/PM**, **CLV/PM** Output voltage reference (Vd) for the d-Axis.	10 V: 200 Vrms (-10 to +10 V) <1>	0.1 Vac
U6-07 (005F)	q-Axis ACR Output	ACR(q) Output	V/f, V/f w PG, **OLV**, **CLV**, OLV/PM, **AOLV/PM**, **CLV/PM** Displays the output value for current control relative to motor secondary current (q-Axis).	10 V: 200 Vrms (-10 to +10 V) <1>	0.1%
U6-08 (0060)	d-Axis ACR Output	ACR(d) Output	V/f, V/f w PG, **OLV**, **CLV**, OLV/PM, **AOLV/PM**, **CLV/PM** Displays the output value for current control relative to motor secondary current (d-Axis).	110 V: 200 Vrms (-10 to +10 V) <1>	0.1%
U6-09 (07C0)	Advance Phase Compensation (Δθ)	d-q Axis Comp	V/f, V/f w PG, OLV, CLV, OLV/PM, **AOLV/PM**, CLV/PM Displays the degree of forward phase correction after calculating the deviation of Δθcmp.	10 V: 180 deg -10 V: -180 deg (-10 to +10 V)	0.1 deg
U6-10 (07C1)	Control Axis Deviation (Δθ)	d-q Axis Devt	V/f, V/f w PG, OLV, CLV, OLV/PM, **AOLV/PM**, CLV/PM Displays the amount of deviation between the actual d-Axis / q-Axis and the γ-Axis / δ-Axis used for motor control.	10 V: 180 deg -10 V: -180 deg (-10 to +10 V)	0.1 deg
U6-13 (07CA)	Flux Position Detection (sensor)	FluxPosition Fb	V/f, V/f w PG, OLV, CLV, OLV/PM, AOLV/PM, **CLV/PM** Monitors the value of the flux position detection (sensor).	10 V: 180 deg -10 V: -180 deg (-10 to +10 V)	0.1 deg

No. (Addr. Hex)	Name	LCD Display	Description	Analog Output Level	Unit
U6-14 (07CB)	Flux Position Estimation (observer)	FluxPosition Est	V/f, V/f w PG, OLV, CLV, OLV/PM, **AOLV/PM**, CLV/PM Monitors the value of the flux position estimation.	10 V: 180 deg -10 V: -180 deg (-10 to +10 V)	0.1 deg
U6-18 (07CD)	Speed Detection PG1 Counter	PG1 CounterValue	**All Modes** Monitors the number of pulses for speed detection (PG1).	10 V: 65536	1 pulse
U6-19 (07E5)	Speed Detection PG2 Counter	PG2 CounterValue	**All Modes** Monitors the number of pulses for speed detection (PG2).	10 V: 65536	1 pulse
U6-20 (07D4)	Frequency Reference Bias (Up/Down 2)	Up/Dn 2 Bias Val	**All Modes** Displays the bias value used to adjust the frequency reference.	10 V: Max frequency	0.1%
U6-21 (07D5)	Offset Frequency	Offset Frequency	**All Modes** Displays the total value of the offset frequencies d7-01, d7-02 and d7-03 selected with digital inputs 44 to 46.	10 V: Max frequency	0.1%
U6-22 (0062)	Zero Servo Pulse Movement	Zero Servo Pulse	V/f, V/f w PG, OLV, **CLV**, OLV/PM, AOLV/PM, **CLV/PM** Displays how far the rotor has moved from its last position in PG pulses (multiplied by 4).	10 V: No. of pulses per revolution (-10 to +10 V)	1 pulse
U6-25 (006B)	Feedback Control Output	ASR Out w/o Fil	V/f, V/f w PG, OLV, **CLV**, OLV/PM, AOLV/PM, **CLV/PM** Output monitor for the ASR speed loop.	10 V: Motor secondary rated current (-10 to +10 V)	0.01%
U6-26 (006C)	Feed Forward Control Output	FF Cont Output	V/f, V/f w PG, OLV, **CLV**, OLV/PM, AOLV/PM, **CLV/PM** Output monitor for Feed Forward control.	10 V: Motor secondary rated current (-10 to +10 V)	0.01%
U6-57 (07C4)	Integrated Current Deviation during Judging Polarity	PoleDis IdDifVal	V/f, V/f w PG, OLV, CLV, OLV/PM, **AOLV/PM**, **CLV/PM** Displays the deviation from the integrated current when judging motor polarity. If this value is lower than 819, then increase the value set to n8-84. The value 8192 is equivalent to the motor rated current.	No signal output available	1
U6-80 to U6-83 (07B0 to 07B3) <2>	Online IP Address	–	**All Modes** IP Address currently available; U6-80 is the most significant octet.	0 to 255	–
U6-84 to U6-87 (07B4 to 07B7) <2>	Online Subnet	–	**All Modes** Subnet currently available; U6-84 is the most significant octet.	0 to 255	–
U6-88 to U6-91 (07B8 to 07F1) <2>	Online Gateway	–	**All Modes** Gateway currently available; U6-88 is the most significant octet.	0 to 255	–
U6-92 (07F2) <2>	Online Speed	OPT LINK SPEED	**All Modes** Link Speed	10: 10 Mbps 100: 100 Mbps	–
U6-93 (07F3) <2>	Online Duplex	OPT DUPLEX	**All Modes** Duplex Setting	0: Half 1: Full	–
U6-98 (07F8) <2>	First Fault	OPT FIRST FAULT	**All Modes** First Option Fault	–	–
U6-99 (07F9) <2>	Current Fault	OPT STATUS	**All Modes** Current Option Fault	–	–

<1> Values shown are specific to 200 V class drives. Double the values for 400 V class drives. Multiply the values by 2.875 for 600 V class drives.

<2> Available in drive software versions PRG: 1018 and later.

Note: Fault histories are not kept when CPF00, CPF01, CPF06, CPF24, oFA00, oFb00, oFC00, Uv1, Uv2, or Uv3 occur.

◆ U8: DriveWorksEZ Monitors

No. (Addr. Hex)	Name	LCD Display	Description	Analog Output Level	Unit
U8-01 to U8-10 (1950 to 1959)	DriveWorksEZ Custom Monitor 1 to 10	–	All Modes DriveWorksEZ Custom Monitor 1 to 10	10 V: 100%	0.01%
U8-11 to U8-13 (195A to 195C)	DriveWorksEZ Version Control Monitor 1 to 3	–	All Modes DriveWorksEZ Version Control Monitor 1 to 3	No signal output available	–
U8-14 to U8-26 (195D to 1969)	DriveWorksEZ Pro Monitors	–	All Modes DriveWorksEZ Pro Monitors. Refer to the DWEZ Pro Help file for details.	–	–

B.16 Control Mode Dependent Parameter Default Values

The tables below list parameters that depend on the control mode selection (A1-02 for motor 1, E3-01 for motor 2). Changing the control mode initializes these parameters to the values shown here.

◆ A1-02 (Motor 1 Control Mode) Dependent Parameters

Table B.4 A1-02 (Motor 1 Control Mode) Dependent Parameters and Default Values

No.	Name	Setting Range	Resolution	Control Modes (A1-02)			
				V/f (0)	V/f w/PG (1)	OLV (2)	CLV (3)
b2-01	DC Injection Braking Start Frequency	0.0 to 10.0	0.1 Hz	0.5	0.5	0.5	0.5
b2-04	DC Injection Braking Time at Stop	0.00 to 10.00	0.01 s	0.50	0.50	0.50	0.50
b3-01	Speed Search Selection at Start	0 to 1	–	0	1	0	1
b3-02	Speed Search Deactivation Current	0 to 200	1%	120	–	100	–
b3-08	Current Control Gain during Speed Search (Speed Estimation Type)	0.00 to 6.00	–	<1>	<1>	<1>	<1>
b3-09	Current Control Integral Time during Speed Search (Speed Estimation Type)	0.0 to 1000.0	0.1 ms	2.0 ms	2.0 ms	2.0 ms	2.0 ms
b3-14	Bi-Directional Speed Search Selection	0 to 1	1	1	0	1	1
b5-15	PID Sleep Function Start Level	0.0 to 400.0	0.1	0.0 Hz	0.0 Hz	0.0 Hz	0.0 Hz
b6-01	Dwell Reference at Start	0.0 to 400.0	0.1	0.0 Hz	0.0 Hz	0.0 Hz	0.0 Hz
b6-03	Dwell Reference at Stop	0.0 to 400.0	0.1	0.0 Hz	0.0 Hz	0.0 Hz	0.0 Hz
b8-01	Energy Saving Control Selection	0 to 1	–	0	0	0	0
b8-02	Energy Saving Gain	0.0 to 10.0	0.1	–	–	0.7	1.0
b8-03	Energy Saving Control Filter Time Constant	0.00 to 10.00	0.01 s	–	–	0.50 <2>	0.01 <2>
C1-11	Accel/Decel Time Switching Frequency	0.0 to 400.0	0.1	0.0 Hz	0.0 Hz	0.0 Hz	0.0 Hz
C2-01	S-Curve Time at Acceleration Start	0.00 to 10.00	0.01 s	0.20	0.20	0.20	0.20
C3-01	Slip Compensation Gain	0.0 to 2.5	0.1	0.0	–	1.0	1.0
C3-02	Slip Compensation Primary Delay Time	0 to 10000	1 ms	2000	–	200	–
C4-01	Torque Compensation Gain	0.00 to 2.50	0.01	1.00	1.00	1.00	–
C4-02	Torque Compensation Primary Delay Time	0 to 10000	1 ms	200 <3>	200 <3>	20	–
C5-01	ASR Proportional Gain 1	0.00 to 300.00	0.01	–	0.20	–	20.00
C5-02	ASR Integral Time 1	0.000 to 10.000	0.001 s	–	0.200	–	0.500
C5-03	ASR Proportional Gain 2	0.00 to 300.00	0.01	–	0.02	–	20.00
C5-04	ASR Integral Time 2	0.000 to 10.000	0.001 s	–	0.050	–	0.500
C5-06	ASR Primary Delay Time Constant	0.000 to 0.500	0.001 s	–	–	–	0.004
C5-07	ASR Gain Switching Frequency	0.0 to 400.0	0.1	–	–	–	0.0 Hz
C6-02	Carrier Frequency Selection	1 to F	–	7 <4>	7 <4>	7 <4>	7
d3-01	Jump Frequency 1	0.0 to 400.0	0.1	0.0 Hz	0.0 Hz	0.0 Hz	0.0 Hz
d3-02	Jump Frequency 2	0.0 to 400.0	0.1	0.0 Hz	0.0 Hz	0.0 Hz	0.0 Hz
d3-03	Jump Frequency 3	0.0 to 400.0	0.1	0.0 Hz	0.0 Hz	0.0 Hz	0.0 Hz
d3-04	Jump Frequency Width	0.0 to 20.0	0.1	1.0 Hz	1.0 Hz	1.0 Hz	1.0 Hz
d5-02	Torque Reference Delay Time	0 to 1000	1 ms	–	–	–	0
E1-04	Maximum Output Frequency	40.0 to 400.0	0.1 Hz	60.0	60.0	60.0	60.0
E1-05	Maximum Voltage	0.0 to 255.0 <5>	0.1 V	575 <6>	575 <6>	575	575
E1-06	Base Frequency	0.0 to 400.0	0.1 Hz	60.0	60.0	60.0	60.0
E1-07	Middle Output Frequency	0.0 to 400.0	0.1 Hz	3.0	3.0	3.0	–
E1-08	Middle Output Frequency Voltage	0.0 to 255.0 <5>	0.1 V	15.0 <6>	15.0 <6>	15.0	–
E1-09	Minimum Output Frequency	0.0 to 400.0	0.1 Hz	1.5	1.5	0.5	0.0
E1-10	Minimum Output Frequency Voltage	0.0 to 255.0 <5>	0.1 V	9.0	9.0	2.0	–
F1-01	PG 1 Pulses Per Revolution	0 to 60000	1 ppr	–	600	–	600
F1-05	PG 1 Rotation Selection	0 to 1	–	–	0	–	0
F1-09	Overspeed Detection Delay Time	0.0 to 2.0	0.1 s	–	1.0	–	0.0

No.	Name	Setting Range	Resolution	Control Modes (A1-02)			
				V/f (0)	V/f w/PG (1)	OLV (2)	CLV (3)
L1-01	Motor Overload Protection Selection	0 to 4	–	1	1	1	1
L3-20	DC Bus Voltage Adjustment Gain	0.00 to 5.00	0.01	1.00	1.00	0.30	0.30
L3-21	Accel/Decel Rate Calculation Gain	0.10 to 10.00	0.01	1.00	1.00	1.00	1.00
L3-34	Torque Limit Delay Time	0.000 to 1.000	0.001 s	–	–	–	–
L4-01	Speed Agree Detection Level	0.0 to 400.0	0.1	0.0 Hz	0.0 Hz	0.0 Hz	0.0 Hz
L4-02	Speed Agree Detection Width	0.0 to 20.0	0.1 Hz	2.0	2.0	2.0	2.0
L4-03	Speed Agree Detection Level (+/-)	-400.0 to 400.0	0.1	0.0 Hz	0.0 Hz	0.0 Hz	0.0 Hz
L4-04	Speed Agree Detection Width (+/-)	0.0 to 20.0	0.1 Hz	2.0	2.0	2.0	2.0
L8-38	Carrier Frequency Reduction Selection	0 to 2	–	<4>	<4>	<4>	<4>
L8-40	Carrier Frequency Reduction Off Delay Time	0.00 to 2.00	0.01 s	0.50	0.50	0.50	0.50
o1-03	Digital Operator Display Selection	0 to 3	–	0	0	0	0
o1-04	V/f Pattern Display Unit	0 to 1	–	—	—	—	0

<1> Default setting value is determined by parameter o2-04, Drive Model Selection.

<2> This setting value depends on a Maximum Applicable Motor Capacity in models 2A0250 to 2A0415, 4A0139 to 4A1200, and 5A0099 to 5A0242: 2.00 in Open Loop Vector Control, 0.05 in Closed Loop Vector Control.

<3> This setting value depends on a Maximum Applicable Motor Capacity: 1000 ms in models 2A0138 to 2A0415, 4A0139 to 4A1200, and 5A0099 to 5A0242

<4> Default setting is dependent on parameter C6-01, Drive Duty Selection.

<5> Values shown are specific to 200 V class drives. Double the values for 400 V class drives. Multiply the values by 2.875 for 600 V class drives.

<6> This setting value depends on a Maximum Applicable Motor Capacity and V/f pattern selection in parameter E1-03.

Table B.5 A1-02 (Motor 1 Control Mode) Dependent Parameters and Default Values

No.	Name	Setting Range	Resolution	Control Modes (A1-02)		
				OLV/PM (5)	AOLV/PM (6)	CLV/PM (7)
b2-01	DC Injection Braking Start Frequency	0.0 to 10.0	0.1 Hz	0.5 Hz	1.0% <1>	0.5% <1>
b2-04	DC Injection Braking Time at Stop	0.00 to 10.00	0.01 s	0.00	0.00	0.00
b3-01	Speed Search Selection at Start	0 to 1	–	0	0	1
b3-02	Speed Search Deactivation Current	0 to 200	1%	–	–	–
b3-08	Current Control Gain during Speed Search (Speed Estimation Type)	0.00 to 6.00	–	0.3	0.3	–
b3-09	Current Control Integral Time during Speed Search (Speed Estimation Type)	0.0 to 1000.0	0.1 ms	4.0 ms	4.0 ms	–
b3-14	Bi-Directional Speed Search Selection	0 to 1	–	–	–	–
b5-15	PID Sleep Function Start Level	0.0 to 400.0 Hz <2>	0.1	0.0 Hz	0.0%	0.0%
b6-01	Dwell Reference at Start	0.0 to 400.0 Hz <2>	0.1	0.0 Hz	0.0%	0.0%
b6-03	Dwell Reference at Stop	0.0 to 400.0 Hz <2>	0.1	0.0 Hz	0.0%	0.0%
b8-01	Energy Saving Control Selection	0 to 1	–	–	1	1
b8-02	Energy Saving Gain	0.0 to 10.0	0.1	–	–	–
b8-03	Energy Saving Control Filter Time Constant	0.00 to 10.00	0.01 s	–	–	–
C1-11	Accel/Decel Time Switching Frequency	0.0 to 400.0 Hz <2>	0.1	0.0 Hz	0.0%	0.0%
C2-01	S-Curve Time at Acceleration Start	0.00 to 10.00	0.01 s	1.00	0.20	0.20
C3-01	Slip Compensation Gain	0.0 to 2.5	0.1	–	–	–
C3-02	Slip Compensation Primary Delay Time	0 to 10000	1 ms	–	–	–
C4-01	Torque Compensation Gain	0.00 to 2.50	0.01	0.00	–	–
C4-02	Torque Compensation Primary Delay Time	0 to 10000	1 ms	100	–	–
C5-01	ASR Proportional Gain 1	0.00 to 300.00	0.01	–	10.00	20.00
C5-02	ASR Integral Time 1	0.000 to 10.000	0.001 s	–	0.500	0.500
C5-03	ASR Proportional Gain 2	0.00 to 300.00	0.01	–	10.00	20.00
C5-04	ASR Integral Time 2	0.000 to 10.000	0.001 s	–	0.500	0.500
C5-06	ASR Primary Delay Time Constant	0.000 to 0.500	0.001 s	–	0.016	0.004

No.	Name	Setting Range	Resolution	Control Modes (A1-02)		
				OLV/PM (5)	AOLV/PM (6)	CLV/PM (7)
C5-07	ASR Gain Switching Frequency	0.0 to 400.0 Hz <2>	0.1	0.0 Hz	0.0%	0.0%
C6-02	Carrier Frequency Selection	1 to F	–	2	2	2
d3-01	Jump Frequency 1	0.0 to 400.0 Hz <2>	0.1	0.0 Hz	0.0%	0.0%
d3-02	Jump Frequency 2	0.0 to 400.0 Hz <2>	0.1	0.0 Hz	0.0%	0.0%
d3-03	Jump Frequency 3	0.0 to 400.0 Hz <2>	0.1	0.0 Hz	0.0%	0.0%
d3-04	Jump Frequency Width	0.0 to 20.0 <3>	0.1	1.0 Hz	1.0%	1.0%
d5-02	Torque Reference Delay Time	0 to 1000	1 ms	–	–	–
E1-04	Maximum Output Frequency	40.0 to 400.0	0.1 Hz	<4>	<4>	<4>
E1-05	Maximum Voltage	0.0 to 255.0 <5>	0.1 V	<4>	<4>	<4>
E1-06	Base Frequency	0.0 to 400.0	0.1 Hz	<4>	<4>	<4>
E1-07	Middle Output Frequency	0.0 to 400.0	0.1 Hz	–	–	–
E1-08	Middle Output Frequency Voltage	0.0 to 255.0 <5>	0.1 V	–	–	–
E1-09	Minimum Output Frequency	0.0 to 400.0	0.1 Hz	<4>	<4>	0.0
E1-10	Minimum Output Frequency Voltage	0.0 to 255.0 <5>	0.1 V	–	–	–
E5-01	Motor Code Selection (for PM Motors)	0000 to FFFF	–	<6>	<6>	<6>
F1-01	PG 1 Pulses Per Revolution	0 to 60000	1 ppr	–	–	1024
F1-05	PG 1 Rotation Selection	0 to 1	–	1	1	1
F1-09	Overspeed Detection Delay Time	0.0 to 2.0	0.1 s	–	0.0	0.0
L1-01	Motor Overload Protection Selection	0 to 6	–	4	4	5
L3-20	DC Bus Voltage Adjustment Gain	0.00 to 5.00	0.01	0.65	0.65	0.65
L3-21	Accel/Decel Rate Calculation Gain	0.10 to 10.00	0.01	1.00	1.00	1.00
L3-34	Torque Limit Delay Time	0.000 to 1.000	0.001 s	–	0.200	0.020
L4-01	Speed Agree Detection Level	0.0 to 400.0 Hz <2>	0.1	0.0 Hz	0.0%	0.0%
L4-02	Speed Agree Detection Width	0.0 to 20.0	0.1 Hz	2.0 Hz	4.0% <1>	4.0% <1>
L4-03	Speed Agree Detection Level (+/-)	-400.0 to 400.0 Hz <7>	0.1	0.0 Hz	0.0%	0.0%
L4-04	Speed Agree Detection Width (+/-)	0.0 to 20.0	0.1 Hz	2.0 Hz	4.0% <1>	4.0% <1>
L8-38	Carrier Frequency Reduction Selection	0 to 2	–	0	–	0
L8-40	Carrier Frequency Reduction Off Delay Time	0.00 to 2.00	0.01 s	0.00	–	0.00
o1-03	Digital Operator Display Selection	0 to 3	–	0	1	1
o1-04	V/f Pattern Display Unit	0 to 1	–	–	1	1

<1> Value calculated as a percentage of the maximum output frequency.
<2> In AOLV/PM and CLV/PM control modes, the setting units and range are expressed as a percentage (0.0 to 100.0%) instead of in Hz.
<3> In AOLV/PM and CLV/PM control modes, the setting units and range are expressed as a percentage (0.0 to 40.0%) instead of in Hz.
<4> Default setting is dependent on parameter E5-01, Motor Code Selection.
<5> Values shown are specific to 200 V class drives. Double the values for 400 V class drives. Multiply the values by 2.875 for 600 V class drives.
<6> Default setting is determined by parameter o2-04, Drive Model Selection.
<7> In AOLV/PM and CLV/PM control modes, the setting units and range are expressed as a percentage (-100.0 to 100.0%) instead of in Hz.

◆ E3-01 (Motor 2 Control Mode) Dependent Parameters

Table B.6 E3-01 (Motor 2 Control Mode) Dependent Parameters and Default Values

No.	Name	Setting Range	Resolution	Control Modes (E3-01)			
				V/f (0)	V/f w/PG (1)	OLV (2)	CLV (3)
C3-21	Motor 2 Slip Compensation Gain	0.0 to 2.5	0.1	0.0	–	1.0	1.0
C3-22	Motor 2 Slip Compensation Primary Delay Time	0 to 10000	1 ms	2000	–	200	–
C5-21	Motor 2 ASR Proportional Gain 1	0.00 to 300.00	0.01	–	0.20	–	20.00
C5-22	Motor 2 ASR Integral Time 1	0.000 to 10.000	0.001 s	–	0.200	–	0.500
C5-23	Motor 2 Proportional Gain 2	0.00 to 300.00	0.01	–	0.02	–	20.00
C5-24	Motor 2 ASR Integral Time 2	0.000 to 10.000	0.001 s	–	0.050	–	0.500
C5-26	Motor 2 Carrier Frequency Selection	1 to F	–	7 <1>	7 <1>	7 <1>	7 <1>
E3-04	Motor 2 Maximum Output Frequency	40.0 to 400.0	0.1 Hz	60.0	60.0	60.0	60.0
E3-05	Motor 2 Maximum Output Voltage <2>	0.0 to 255.0	0.1 V	200.0	200.0	200.0	200.0
E3-06	Motor 2 Base Frequency	0.0 to 400.0	0.1 Hz	60.0	60.0	60.0	60.0
E3-07	Motor 2 Mid Output Frequency	0.0 to 400.0	0.1 Hz	3.0	3.0	3.0	0.0
E3-08	Motor 2 Mid Output Frequency Voltage <2>	0.0 to 255.0	0.1 V	15.0	15.0	11.0	0.0
E3-09	Motor 2 Minimum Output Frequency	0.0 to 400.0	0.1 Hz	1.5	1.5	0.5	0.0
E3-10	Motor 2 Minimum Output Voltage <2>	0.0 to 255.0	0.1 V	9.0	9.0	2.0	0.0

<1> Default setting is determined by parameters o2-04, Drive Model Selection, and C6-01, Drive Duty Selection.

<2> Values shown here are specific to 200 V class drives. Double the value for 400 V class drives. Multiply the value by 2.875 for 600 V class drives.

B.17 V/f Pattern Default Values

The following tables show the V/f pattern setting default values depending on the control mode (A1-02) and the V/f pattern selection (E1-03 in V/f Control).

Table B.7 E1-03 V/f Pattern Settings for Drive Capacity: Models 2A0004 to 2A0021 (HD), 2A0004 to 2A0018 (ND), 4A0002 to 4A0011 (HD), 4A0002 to 4A0009 (ND), 5A0003 to 5A0009 (HD), and 5A0003 to 5A0006 (ND)

No.	Unit	V/f Control																OLV	CLV	OLV/PM AOLV/PM CLV/PM
E1-03	-	0	1	2	3	4	5	6	7	8	9	A	B	C	D	E	F <1>			
E1-04	Hz	50.0	60.0	60.0	72.0	50.0	50.0	60.0	60.0	50.0	50.0	60.0	60.0	90.0	120.0	180.0	60.0	60.0	60.0	<3>
E1-05 <2>	V	200.0	200.0	200.0	200.0	200.0	200.0	200.0	200.0	200.0	200.0	200.0	200.0	200.0	200.0	200.0	230.0	230.0	230.0	<3>
E1-06	Hz	50.0	60.0	50.0	60.0	50.0	50.0	60.0	60.0	50.0	50.0	60.0	60.0	60.0	60.0	60.0	60.0	60.0	60.0	<3>
E1-07	Hz	2.5	3.0	3.0	3.0	25.0	25.0	30.0	30.0	2.5	2.5	3.0	3.0	3.0	3.0	3.0	3.0	3.0	–	–
E1-08 <2>	V	15.0	15.0	15.0	15.0	35.0	50.0	35.0	50.0	19.0	24.0	19.0	24.0	15.0	15.0	15.0	17.3	13.8	–	–
E1-09	Hz	1.3	1.5	1.5	1.5	1.3	1.3	1.5	1.5	1.3	1.3	1.5	1.5	1.5	1.5	1.5	1.5	0.5	0.0	<3>
E1-10 <2>	V	9.0	9.0	9.0	9.0	8.0	9.0	8.0	9.0	11.0	13.0	11.0	15.0	9.0	9.0	9.0	10.2	2.9	–	–

<1> This value determines the default values for E1-04 through E1-10 (E3-04 through E3-10 for motor 2). The default values are the same as the values of E1-03 = 1.

<2> Values shown here are specific to 200 V class drives. Double the value for 400 V class drives. Multiply the value by 2.875 for 600 V class drives.

<3> The default setting value varies depending on the values of parameter E5-01, Motor Code Selection (for PM Motors).

Table B.8 E1-03 V/f Pattern Settings for Drive Capacity: Models 2A0030 to 2A0211 (HD), 2A0021 to 2A0169 (ND), 4A0018 to 4A0103 (HD), 4A0011 to 4A0088 (ND), 5A0011 to 5A0077 (HD), and 5A0009 to 5A0062 (ND)

No.	Unit	V/f Control																OLV	CLV	OLV/PM AOLV/PM CLV/PM
E1-03	-	0	1	2	3	4	5	6	7	8	9	A	B	C	D	E	F <1>			
E1-04	Hz	50.0	60.0	60.0	72.0	50.0	50.0	60.0	60.0	50.0	50.0	60.0	60.0	90.0	120.0	180.0	60.0	60.0	60.0	<3>
E1-05 <2>	V	200.0	200.0	200.0	200.0	200.0	200.0	200.0	200.0	200.0	200.0	200.0	200.0	200.0	200.0	200.0	230.0	230.0	230.0	<3>
E1-06	Hz	50.0	60.0	50.0	60.0	50.0	50.0	60.0	60.0	50.0	50.0	60.0	60.0	60.0	60.0	60.0	60.0	60.0	60.0	<3>
E1-07	Hz	2.5	3.0	3.0	3.0	25.0	25.0	30.0	30.0	2.5	2.5	3.0	3.0	3.0	3.0	3.0	3.0	3.0	–	–
E1-08 <2>	V	14.0	14.0	14.0	14.0	35.0	50.0	35.0	50.0	18.0	23.0	18.0	23.0	14.0	14.0	14.0	16.1	12.7	–	–
E1-09	Hz	1.3	1.5	1.5	1.5	1.3	1.3	1.5	1.5	1.3	1.3	1.5	1.5	1.5	1.5	1.5	1.5	0.5	0.0	<3>
E1-10 <2>	V	7.0	7.0	7.0	7.0	6.0	7.0	6.0	7.0	9.0	11.0	9.0	13.0	7.0	7.0	7.0	8.1	2.3	–	–

<1> This value determines the default values for E1-04 through E1-10 (E3-04 through E3-10 for motor 2). The default values are the same as the values of E1-03 = 1.

<2> Values shown here are specific to 200 V class drives. Double the value for 400 V class drives. Multiply the value by 2.875 for 600 V class drives.

<3> The default setting value varies depending on the values of parameter E5-01, Motor Code Selection (for PM Motors).

Table B.9 E1-03 V/f Pattern Settings for Drive Capacity: Models 2A0250 to 2A0415 (HD), 2A0211 to 2A0415 (ND), 4A0139 to 4A1200 (HD), 4A0103 to 4A1200 (ND), 5A0099 to 5A0242 (HD), and 5A0077 to 5A0242 (ND)

No.	Unit	V/f Control																OLV	CLV	OLV/PM AOLV/PM CLV/PM
E1-03	-	0	1	2	3	4	5	6	7	8	9	A	B	C	D	E	F <1>			
E1-04	Hz	50.0	60.0	60.0	72.0	50.0	50.0	60.0	60.0	50.0	50.0	60.0	60.0	90.0	120.0	180.0	60.0	60.0	60.0	<3>
E1-05 <2>	V	200.0	200.0	200.0	200.0	200.0	200.0	200.0	200.0	200.0	200.0	200.0	200.0	200.0	200.0	200.0	230.0	230.0	230.0	<3>
E1-06	Hz	50.0	60.0	50.0	60.0	50.0	50.0	60.0	60.0	50.0	50.0	60.0	60.0	60.0	60.0	60.0	60.0	60.0	60.0	<3>
E1-07	Hz	2.5	3.0	3.0	3.0	25.0	25.0	30.0	30.0	2.5	2.5	3.0	3.0	3.0	3.0	3.0	3.0	3.0	–	–
E1-08 <2>	V	12.0	12.0	12.0	12.0	35.0	50.0	35.0	50.0	15.0	20.0	15.0	20.0	12.0	12.0	12.0	13.8	12.7	–	–
E1-09	Hz	1.3	1.5	1.5	1.5	1.3	1.3	1.5	1.5	1.3	1.3	1.5	1.5	1.5	1.5	1.5	1.5	0.5	0.0	<3>
E1-10 <2>	V	6.0	6.0	6.0	6.0	5.0	6.0	5.0	6.0	7.0	9.0	7.0	11.0	6.0	6.0	6.0	6.9	2.3	–	–

<1> This value determines the default values for E1-04 through E1-10 (E3-04 through E3-10 for motor 2). The default values are the same as the values of E1-03 = 1.

<2> Values shown here are specific to 200 V class drives. Double the value for 400 V class drives. Multiply the value by 2.875 for 600 V class drives.

<3> The default setting value varies depending on the values of parameter E5-01, Motor Code Selection (for PM Motors).

B.18 Defaults by Drive Model and Duty Rating ND/HD

The following tables show parameters and default settings that change with the drive model selection (o2-04) and drive duty selection (C6-01). Parameter numbers shown in parenthesis are valid for motor 2.

Table B.10 200 V Class Drives Default Settings by Drive Model Selection and ND/HD settings

No.	Name	Unit	Default Settings							
–	Drive Model	–	2A0004		2A0006		2A0008		2A0010	
C6-01	Drive Duty Selection	–	HD	ND	HD	ND	HD	ND	HD	ND
o2-04	Drive Model Selection	Hex.	62		63		64		65	
E2-11 (E4-11)	Motor Rated Output	kW (HP)	0.4 (0.75)	0.75 (0.75)	0.75 (1)	1.1 (1)	1.1 (2)	1.5 (2)	1.5 (2)	2.2 (3)
b3-04	V/f Gain during Speed Search	%	100	100	100	100	100	100	100	100
b3-06	Output Current 1 during Speed Search	–	1	1	0.5	0.5	0.5	0.5	0.5	0.5
b3-07 <1>	Output Current 2 during Speed Search (Speed Estimation Type)	–	–	–	–	–	–	–	–	–
b3-08	Current Control Gain during Speed Search (Speed Estimation Type)	–	0.5	0.5	0.5	0.5	0.5	0.5	0.5	0.5
b3-26 <1>	Start Speed Search Select	–	–	–	–	–	–	–	–	–
b8-03	Energy Saving Control Filter Time Constant	s	0.50	0.50	0.50	0.50	0.50	0.50	0.50	0.50
b8-04	Energy Saving Coefficient Value	–	288.2	223.7	223.7	196.6	196.6	169.4	169.4	156.8
C5-17 (C5-37)	Motor Inertia	kgm^2	0.0015	0.0028	0.0028	0.0068	0.0068	0.0068	0.0068	0.0088
C6-02	Carrier Frequency Selection	–	1	7	1	7	1	7	1	7
E2-01 (E4-01)	Motor Rated Current	A	1.9	3.3	3.3	4.9	4.9	6.2	6.2	8.5
E2-02 (E4-02)	Motor Rated Slip	Hz	2.9	2.5	2.5	2.6	2.6	2.6	2.6	2.9
E2-03 (E4-03)	Motor No-Load Current	A	1.2	1.8	1.8	2.3	2.3	2.8	2.8	3
E2-05 (E4-05)	Motor Line-to-Line Resistance	Ω	9.842	5.156	5.156	3.577	3.577	1.997	1.997	1.601
E2-06 (E4-06)	Motor Leakage Inductance	%	18.2	13.8	13.8	18.5	18.5	18.5	18.5	18.4
E2-10 (E4-10)	Motor Iron Loss for Torque Compensation	W	14	26	26	38	38	53	53	77
E5-01	Motor Code Selection (for PM Motors)	Hex.	1202	1202	1203	1203	FFFF	FFFF	1205	1205
L2-02	Momentary Power Loss Ride-Thru Time	s	0.1	0.1	0.2	0.2	0.3	0.3	0.3	0.3
L2-03	Momentary Power Loss Minimum Baseblock Time	s	0.2	0.3	0.3	0.4	0.4	0.4	0.4	0.5
L2-04	Momentary Power Loss Voltage Recovery Time	s	0.3	0.3	0.3	0.3	0.3	0.3	0.3	0.3
L3-24	Motor Acceleration Time for Inertia Calculations	s	0.178	0.142	0.142	0.142	0.142	0.166	0.166	0.145
L8-02	Overheat Alarm Level	°C	115	115	115	115	115	115	115	115
L8-35	Installation Method Selection	–	2	2	2	2	2	2	2	2
L8-38	Carrier Frequency Reduction Selection	–	2	2	2	2	2	2	2	2
n1-03	Hunting Prevention Time Constant	ms	10	10	10	10	10	10	10	10
n5-02	Motor Acceleration Time	s	0.178	0.142	0.142	0.142	0.142	0.166	0.166	0.145

<1> This parameter is available in models 4A0930 and 4A1200.

B.18 Defaults by Drive Model and Duty Rating ND/HD

No.	Name	Unit	Default Settings							
–	Drive Model	–	2A0012		2A0018		2A0021		2A0030	
C6-01	Drive Duty Selection	–	HD	ND	HD	ND	HD	ND	HD	ND
o2-04	Drive Model Selection	Hex.	66		67		68		6A	
E2-11 (E4-11)	Motor Rated Output	kW (HP)	2.2 (3)	3.0 (3)	3.0 (3)	3.7 (5)	3.7 (5)	5.5 (7.5)	5.5 (7.5)	7.5 (10)
b3-04	V/f Gain during Speed Search	%	100	100	100	100	100	100	100	100
b3-06	Output Current 1 during Speed Search	–	0.5	0.5	0.5	0.5	0.5	0.5	0.5	0.5
b3-07 <1>	Output Current 2 during Speed Search (Speed Estimation Type)	–	–	–	–	–	–	–	–	–
b3-08	Current Control Gain during Speed Search (Speed Estimation Type)	–	0.5	0.5	0.5	0.5	0.5	0.5	0.5	0.5
b3-26 <1>	Start Speed Search Select	–	–	–	–	–	–	–	–	–
b8-03	Energy Saving Control Filter Time Constant	s	0.50	0.50	0.50	0.50	0.50	0.50	0.50	0.50
b8-04	Energy Saving Coefficient Value	–	156.8	136.4	136.4	122.9	122.9	94.8	94.8	72.69
C5-17 (C5-37)	Motor Inertia	kgm^2	0.0088	0.0158	0.0158	0.0158	0.0158	0.0255	0.026	0.037
C6-02	Carrier Frequency Selection	–	1	7	1	7	1	7	1	7
E2-01 (E4-01)	Motor Rated Current	A	8.5	11.4	11.4	14	14	19.6	19.6	26.6
E2-02 (E4-02)	Motor Rated Slip	Hz	2.9	2.7	2.7	2.73	2.73	1.5	1.5	1.3
E2-03 (E4-03)	Motor No-Load Current	A	3	3.7	3.7	4.5	4.5	5.1	5.1	8
E2-05 (E4-05)	Motor Line-to-Line Resistance	Ω	1.601	1.034	1.034	0.771	0.771	0.399	0.399	0.288
E2-06 (E4-06)	Motor Leakage Inductance	%	18.4	19	19	19.6	19.6	18.2	18.2	15.5
E2-10 (E4-10)	Motor Iron Loss for Torque Compensation	W	77	91	91	112	112	172	172	262
E5-01	Motor Code Selection (for PM Motors)	Hex.	1206	1206	FFFF	FFFF	1208	1208	120A	120A
L2-02	Momentary Power Loss Ride-Thru Time	s	0.5	0.5	1	1	1	1	1	1
L2-03	Momentary Power Loss Minimum Baseblock Time	s	0.5	0.5	0.5	0.6	0.6	0.7	0.7	0.8
L2-04	Momentary Power Loss Voltage Recovery Time	s	0.3	0.3	0.3	0.3	0.3	0.3	0.3	0.3
L3-24	Motor Acceleration Time for Inertia Calculations	s	0.145	0.145	0.145	0.154	0.154	0.168	0.168	0.175
L8-02	Overheat Alarm Level	°C	125	125	110	110	110	110	120	120
L8-35	Installation Method Selection	–	2	2	2	2	2	2	2	2
L8-38	Carrier Frequency Reduction Selection	–	2	2	2	2	2	2	2	2
n1-03	Hunting Prevention Time Constant	ms	10	10	10	10	10	10	10	10
n5-02	Motor Acceleration Time	s	0.145	0.145	0.145	0.154	0.154	0.168	0.168	0.175

<1> This parameter is available in models 4A0930 and 4A1200.

No.	Name	Unit	Default Settings							
–	Drive Model	–	2A0040		2A0056		2A0069		2A0081	
C6-01	Drive Duty Selection	–	HD	ND	HD	ND	HD	ND	HD	ND
o2-04	Drive Model Selection	Hex.	6B		6D		6E		6F	
E2-11 (E4-11)	Motor Rated Power	kW (HP)	7.5 (10)	11 (15)	11 (15)	15 (20)	15 (20)	18.5 (25)	18.5 (25)	22 (30)
b3-04	V/f Gain during Speed Search	%	100	100	100	100	100	100	100	100
b3-06	Output Current 1 during Speed Search	–	0.5	0.5	0.5	0.5	0.5	0.5	0.5	0.5
b3-07 <1>	Output Current 2 during Speed Search (Speed Estimation Type)	–	–	–	–	–	–	–	–	–
b3-08	Current Control Gain during Speed Search (Speed Estimation Type)	–	0.5	0.5	0.5	0.5	0.5	0.5	0.5	0.5
b3-26 <1>	Start Speed Search Select	–	–	–	–	–	–	–	–	–
b8-03	Energy Saving Control Filter Time Constant	s	0.50	0.50	0.50	0.50	0.50	0.50	0.50	0.50
b8-04	Energy Saving Coefficient Value	–	72.69	70.44	70.44	63.13	63.13	57.87	57.87	51.79
C5-17 (C5-37)	Motor Inertia	kgm^2	0.037	0.053	0.053	0.076	0.076	0.138	0.138	0.165
C6-02	Carrier Frequency Selection	–	1	7	1	7	1	7	1	7
E2-01 (E4-01)	Motor Rated Current	A	26.6	39.7	39.7	53	53	65.8	65.8	77.2
E2-02 (E4-02)	Motor Rated Slip	Hz	1.3	1.7	1.7	1.6	1.6	1.67	1.67	1.7
E2-03 (E4-03)	Motor No-Load Current	A	8	11.2	11.2	15.2	15.2	15.7	15.7	18.5
E2-05 (E4-05)	Motor Line-to-Line Resistance	Ω	0.288	0.23	0.23	0.138	0.138	0.101	0.101	0.079
E2-06 (E4-06)	Motor Leakage Inductance	%	15.5	19.5	19.5	17.2	17.2	15.7	20.1	19.5
E2-10 (E4-10)	Motor Iron Loss for Torque Compensation	W	262	245	245	272	272	505	505	538
E5-01	Motor Code Selection (for PM Motors)	Hex.	120B	120B	120D	120D	120E	120E	120F	120F
L2-02	Momentary Power Loss Ride-Thru Time	s	1	1	2	2	2	2	2	2
L2-03	Momentary Power Loss Minimum Baseblock Time	s	0.8	0.9	0.9	1	1	1	1	1
L2-04	Momentary Power Loss Voltage Recovery Time	s	0.3	0.3	0.3	0.6	0.6	0.6	0.6	0.6
L3-24	Motor Acceleration Time for Inertia Calculations	s	0.175	0.265	0.265	0.244	0.244	0.317	0.317	0.355
L8-02	Overheat Alarm Level	°C	125	125	120	120	120	120	125	125
L8-35	Installation Method Selection	–	2	2	2	2	2	2	2	2
L8-38	Carrier Frequency Reduction Selection	–	2	2	2	2	2	2	2	2
n1-03	Hunting Prevention Time Constant	ms	10	10	10	10	10	10	10	10
n5-02	Motor Acceleration Time	s	0.175	0.265	0.265	0.244	0.244	0.317	0.317	0.355

<1> This parameter is available in models 4A0930 and 4A1200.

No.	Name	Unit	Default Settings							
–	Drive Model	–	2A0110		2A0138		2A0169		2A0211	
C6-01	Drive Duty Selection	–	HD	ND	HD	ND	HD	ND	HD	ND
o2-04	Drive Model Selection	Hex.	70		72		73		74	
E2-11 (E4-11)	Motor Rated Power	kW (HP)	22 (30)	30 (40)	30 (40)	37 (50)	37 (50)	45 (60)	45 (60)	55 (75)
b3-04	V/f Gain during Speed Search	%	100	80	80	80	80	80	80	80
b3-06	Output Current 1 during Speed Search	–	0.5	0.5	0.5	0.5	0.5	0.5	0.5	0.5
b3-07 <1>	Output Current 2 during Speed Search (Speed Estimation Type)	–	–	–	–	–	–	–	–	–
b3-08	Current Control Gain during Speed Search (Speed Estimation Type)	–	0.5	0.5	0.5	0.5	0.5	0.5	0.5	0.5
b3-26 <1>	Start Speed Search Select	–	–	–	–	–	–	–	–	–
b8-03	Energy Saving Control Filter Time Constant	s	0.50	0.50	0.50	0.50	0.50	0.50	0.50	2.00
b8-04	Energy Saving Coefficient Value	–	51.79	46.27	46.27	38.16	38.16	35.78	35.78	31.35
C5-17 (C5-37)	Motor Inertia	kgm^2	0.165	0.220	0.220	0.273	0.273	0.333	0.333	0.490
C6-02	Carrier Frequency Selection	–	1	7	1	7	1	7	1	7
E2-01 (E4-01)	Motor Rated Current	A	77.2	105	105	131	131	160	160	190
E2-02 (E4-02)	Motor Rated Slip	Hz	1.7	1.8	1.8	1.33	1.33	1.6	1.6	1.43
E2-03 (E4-03)	Motor No-Load Current	A	18.5	21.9	21.9	38.2	38.2	44	44	45.6
E2-05 (E4-05)	Motor Line-to-Line Resistance	Ω	0.079	0.064	0.064	0.039	0.039	0.03	0.03	0.022
E2-06 (E4-06)	Motor Leakage Inductance	%	19.5	20.8	20.8	18.8	18.8	20.2	20.2	20.5
E2-10 (E4-10)	Motor Iron Loss for Torque Compensation	W	538	699	699	823	823	852	852	960
E5-01	Motor Code Selection (for PM Motors)	Hex.	1210	1210	1212	1212	1213	1213	1214	1214
L2-02	Momentary Power Loss Ride-Thru Time	s	2	2	2	2	2	2	2	2
L2-03	Momentary Power Loss Minimum Baseblock Time	s	1	1.1	1.1	1.1	1.1	1.2	1.2	1.3
L2-04	Momentary Power Loss Voltage Recovery Ramp Time	s	0.6	0.6	0.6	0.6	0.6	1	1	1
L3-24	Motor Acceleration Time for Inertia Calculations	s	0.355	0.323	0.323	0.32	0.32	0.387	0.387	0.317
L8-02	Overheat Alarm Level	°C	130	130	130	130	130	130	125	125
L8-35	Installation Method Selection	–	0	0	0	0	0	0	0	0
L8-38	Carrier Frequency Reduction Selection	–	2	2	2	2	2	2	2	2
n1-03	Hunting Prevention Time Constant	ms	10	10	10	10	10	10	10	10
n5-02	Motor Acceleration Time	s	0.355	0.323	0.323	0.32	0.32	0.387	0.387	0.317

<1> This parameter is available in models 4A0930 and 4A1200.

No.	Name	Unit	Default Settings							
–	Drive Model	–	2A0250		2A0312		2A0360		2A0415	
C6-01	Drive Duty Selection	–	HD	ND	HD	ND	HD	ND	HD	ND
o2-04	Drive Model Selection	Hex.	75		76		77		78	
E2-11 (E4-11)	Motor Rated Power	kW (HP)	55 (75)	75 (100)	75 (100)	90 (125)	90 (125)	110 (150)	110 (150)	110 (175)
b3-04	V/f Gain during Speed Search	%	80	80	80	80	80	80	80	80
b3-06	Output Current 1 during Speed Search	–	0.5	0.7	0.7	0.7	0.7	0.7	0.7	0.7
b3-07 <1>	Output Current 2 during Speed Search (Speed Estimation Type)	–	–	–	–	–	–	–	–	–
b3-08	Current Control Gain during Speed Search (Speed Estimation Type)	–	0.5	0.5	0.5	0.5	0.5	0.5	0.5	0.5
b3-26 <1>	Start Speed Search Select	–	–	–	–	–	–	–	–	–
b8-03	Energy Saving Control Filter Time Constant	s	2.00	2.00	2.00	2.00	2.00	2.00	2.00	2.00
b8-04	Energy Saving Coefficient Value	–	31.35	23.1	23.1	20.65	20.65	18.12	18.12	18.12
C5-17 (C5-37)	Motor Inertia	kgm^2	0.49	0.90	0.90	1.10	1.10	1.90	1.90	1.90
C6-02	Carrier Frequency Selection	–	1	7	1	7	1	7	1	7
E2-01 (E4-01)	Motor Rated Current	A	190	260	260	260	260	260	260	260
E2-02 (E4-02)	Motor Rated Slip	Hz	1.43	1.39	1.39	1.39	1.39	1.39	1.39	1.39
E2-03 (E4-03)	Motor No-Load Current	A	45.6	72	72	72	72	72	72	72
E2-05 (E4-05)	Motor Line-to-Line Resistance	Ω	0.022	0.023	0.023	0.023	0.023	0.023	0.023	0.023
E2-06 (E4-06)	Motor Leakage Inductance	%	20.5	20	20	20	20	20	20	20
E2-10 (E4-10)	Motor Iron Loss for Torque Compensation	W	960	1200	1200	1200	1200	1200	1200	1200
E5-01	Motor Code Selection (for PM Motors)	Hex.	1215	1215	1216	1216	FFFF	FFFF	FFFF	FFFF
L2-02	Momentary Power Loss Ride-Thru Time	s	2	2	2	2	2	2	2	2
L2-03	Momentary Power Loss Minimum Baseblock Time	s	1.3	1.5	1.5	1.5	1.5	1.7	1.7	1.7
L2-04	Momentary Power Loss Voltage Recovery Ramp Time	s	1	1	1	1	1	1	1	1
L3-24	Motor Acceleration Time for Inertia Calculations	s	0.317	0.533	0.533	0.592	0.592	0.646	0.646	0.646
L8-02	Overheat Alarm Level	°C	115	115	120	120	120	120	120	120
L8-35	Installation Method Selection	–	0	0	0	0	0	0	0	0
L8-38	Carrier Frequency Reduction Selection	–	2	2	2	2	2	2	2	2
n1-03	Hunting Prevention Time Constant	ms	10	10	10	10	100	100	100	100
n5-02	Motor Acceleration Time	s	0.317	0.533	0.533	0.592	0.592	0.646	0.646	0.646

<1> This parameter is available in models 4A0930 and 4A1200.

Table B.11 400 V Class Drives Default Settings by Drive Capacity and ND/HD Setting

No.	Name	Unit	Default Settings							
–	Drive Model	–	4A0002		4A0004		4A0005		4A0007	
C6-01	Drive Duty Selection	–	HD	ND	HD	ND	HD	ND	HD	ND
o2-04	Drive Model Selection	Hex.	92		93		94		95	
E2-11 (E4-11)	Motor rated power	kW (HP)	0.4 (0.75)	0.75 (0.75)	0.75 (2)	1.5 (2)	1.5 (3)	2.2 (3)	2.2 (3)	3.0 (3)
b3-04	V/f Gain during Speed Search	%	100	100	100	100	100	100	100	100
b3-06	Output Current 1 during Speed Search	–	0.5	0.5	0.5	0.5	0.5	0.5	0.5	0.5
b3-07 <1>	Output Current 2 during Speed Search (Speed Estimation Type)	–	–	–	–	–	–	–	–	–
b3-08	Current Control Gain during Speed Search (Speed Estimation Type)	–	0.5	0.5	0.5	0.5	0.5	0.5	0.5	0.5
b3-26 <1>	Start Speed Search Select	–	–	–	–	–	–	–	–	–
b8-03	Energy Saving Control Filter Time Constant	s	0.50	0.50	0.50	0.50	0.50	0.50	0.50	0.50
b8-04	Energy Saving Coefficient Value	–	576.4	447.4	447.4	338.8	338.8	313.6	313.6	265.7
C5-17 (C5-37)	Motor Inertia	kgm^2	0.0015	0.0028	0.0028	0.0068	0.0068	0.0088	0.0088	0.0158
C6-02	Carrier Frequency Selection	–	1	7	1	7	1	7	1	7
E2-01 (E4-01)	Motor Rated Current	A	1	1.6	1.6	3.1	3.1	4.2	4.2	5.7
E2-02 (E4-02)	Motor Rated Slip	Hz	2.9	2.6	2.6	2.5	2.5	3	3	2.7
E2-03 (E4-03)	Motor No-Load Current	A	0.6	0.8	0.8	1.4	1.4	1.5	1.5	1.9
E2-05 (E4-05)	Motor Line-to-Line Resistance	Ω	38.198	22.459	22.459	10.1	10.1	6.495	6.495	4.360
E2-06 (E4-06)	Motor Leakage Inductance	%	18.2	14.3	14.3	18.3	18.3	18.7	18.7	19
E2-10 (E4-10)	Motor Iron Loss for Torque Compensation	W	14	26	26	53	53	77	77	105
E5-01	Motor Code Selection (for PM Motors)	Hex.	1232	1232	1233	1233	1235	1235	1236	1236
L2-02	Momentary Power Loss Ride-Thru Time	s	0.1	0.1	0.2	0.2	0.3	0.3	0.5	0.5
L2-03	Momentary Power Loss Min. Baseblock Time	s	0.2	0.3	0.3	0.4	0.4	0.5	0.5	0.5
L2-04	Momentary Power Loss Voltage Recovery Time	s	0.3	0.3	0.3	0.3	0.3	0.3	0.3	0.3
L3-24	Motor Acceleration Time for Inertia Calculations	s	0.178	0.142	0.142	0.166	0.166	0.145	0.145	0.145
L8-02	Overheat Alarm Level	°C	110	110	110	110	110	110	110	110
L8-35	Installation Method Selection	–	2	2	2	2	2	2	2	2
L8-38	Carrier Frequency Reduction Selection	–	2	2	2	2	2	2	2	2
n1-03	Hunting Prevention Time Constant	ms	10	10	10	10	10	10	10	10
n5-02	Motor Acceleration Time	s	0.178	0.142	0.142	0.166	0.166	0.145	0.145	0.145

<1> This parameter is available in models 4A0930 and 4A1200.

No.	Name	Unit	Default Settings							
–	Drive Model	–	4A0009		4A0011		4A0018		4A0023	
C6-01	Drive Duty Selection	–	HD	ND	HD	ND	HD	ND	HD	ND
o2-04	Drive Model Selection	Hex.	96		97		99		9A	
E2-11 (E4-11)	Motor Rated Power	kW (HP)	3.0 (5)	3.7 (5)	3.7 (5)	5.5 (7.5)	5.5 (7.5)	7.5 (10)	7.5 (10)	11 (15)
b3-04	V/f Gain during Speed Search	%	100	100	100	100	100	100	100	100
b3-06	Output Current 1 during Speed Search	–	0.5	0.5	0.5	0.5	0.5	0.5	0.5	0.5
b3-07 <1>	Output Current 2 during Speed Search (Speed Estimation Type)	–	–	–	–	–	–	–	–	–
b3-08	Current Control Gain during Speed Search (Speed Estimation Type)	–	0.5	0.5	0.5	0.5	0.5	0.5	0.5	0.5
b3-26 <1>	Start Speed Search Select	–	–	–	–	–	–	–	–	–
b8-03	Energy Saving Control Filter Time Constant	s	0.50	0.50	0.50	0.50	0.50	0.50	0.50	0.50
b8-04	Energy Saving Coefficient Value	–	265.7	245.8	245.8	189.5	189.5	145.38	145.38	140.88
C5-17 (C5-37)	Motor Inertia	kgm^2	0.0158	0.0158	0.0158	0.0255	0.026	0.037	0.037	0.053
C6-02	Carrier Frequency Selection	–	1	7	1	7	1	7	1	7
E2-01 (E4-01)	Motor Rated Current	A	5.7	7	7	9.8	9.8	13.3	13.3	19.9
E2-02 (E4-02)	Motor Rated Slip	Hz	2.7	2.7	2.7	1.5	1.5	1.3	1.3	1.7
E2-03 (E4-03)	Motor No-Load Current	A	1.9	2.3	2.3	2.6	2.6	4	4	5.6
E2-05 (E4-05)	Motor Line-to-Line Resistance	Ω	4.360	3.333	3.333	1.595	1.595	1.152	1.152	0.922
E2-06 (E4-06)	Motor Leakage Inductance	%	19	19.3	19.3	18.2	18.2	15.5	15.5	19.6
E2-10 (E4-10)	Motor Iron Loss for Torque Compensation	W	105	130	130	193	193	263	263	385
E5-01	Motor Code Selection (for PM Motors)	Hex.	FFFF	FFFF	1238	1238	123A	123A	123B	123B
L2-02	Momentary Power Loss Ride-Thru Time	s	0.5	0.5	0.5	0.5	0.8	0.8	1	1
L2-03	Momentary Power Loss Min. Baseblock Time	s	0.5	0.6	0.6	0.7	0.7	0.8	0.8	0.9
L2-04	Momentary Power Loss Voltage Recovery Time	s	0.3	0.3	0.3	0.3	0.3	0.3	0.3	0.3
L3-24	Motor Acceleration Time for Inertia Calculations	s	0.145	0.154	0.154	0.168	0.168	0.175	0.175	0.265
L8-02	Overheat Alarm Level	°C	110	110	110	110	110	110	115	115
L8-35	Installation Method Selection	–	2	2	2	2	2	2	2	2
L8-38	Carrier Frequency Reduction Selection	–	2	2	2	2	2	2	2	2
n1-03	Hunting Prevention Time Constant	ms	10	10	10	10	10	10	10	10
n5-02	Motor Acceleration Time	s	0.145	0.154	0.154	0.168	0.168	0.175	0.175	0.265

<1> This parameter is available in models 4A0930 and 4A1200.

No.	Name	Unit	Default Settings							
–	Drive Model	–	4A0031		4A0038		4A0044		4A0058	
C6-01	Drive Duty Selection	–	HD	ND	HD	ND	HD	ND	HD	ND
o2-04	Drive Model Selection	Hex.	9C		9D		9E		9F	
E2-11 (E4-11)	Motor Rated Power	kW (HP)	11 (15)	15 (20)	15 (20)	18.5 (25)	18.5 (25-30)	22 (30)	22 (25-30)	30 (40)
b3-04	V/f Gain during Speed Search	%	100	100	100	100	100	100	100	100
b3-06	Output Current 1 during Speed Search	–	0.5	0.5	0.5	0.5	0.5	0.5	0.5	0.5
b3-07 <1>	Output Current 2 during Speed Search (Speed Estimation Type)	–	–	–	–	–	–	–	–	–
b3-08	Current Control Gain during Speed Search (Speed Estimation Type)	–	0.5	0.5	0.5	0.5	0.5	0.5	0.5	0.5
b3-26 <1>	Start Speed Search Select	–	–	–	–	–	–	–	–	–
b8-03	Energy Saving Control Filter Time Constant	s	0.50	0.50	0.50	0.50	0.50	0.50	0.50	0.50
b8-04	Energy Saving Coefficient Value	–	140.88	126.26	126.26	115.74	115.74	103.58	103.58	92.54
C5-17 (C5-37)	Motor Inertia	kgm^2	0.053	0.076	0.076	0.138	0.138	0.165	0.165	0.220
C6-02	Carrier Frequency Selection	–	1	7	1	7	1	7	1	7
E2-01 (E4-01)	Motor Rated Current	A	19.9	26.5	26.5	32.9	32.9	38.6	38.6	52.3
E2-02 (E4-02)	Motor Rated Slip	Hz	1.7	1.6	1.6	1.67	1.67	1.7	1.7	1.8
E2-03 (E4-03)	Motor No-Load Current	A	5.6	7.6	7.6	7.8	7.8	9.2	9.2	10.9
E2-05 (E4-05)	Motor Line-to-Line Resistance	Ω	0.922	0.55	0.55	0.403	0.403	0.316	0.316	0.269
E2-06 (E4-06)	Motor Leakage Inductance	%	19.6	17.2	17.2	20.1	20.1	23.5	23.5	20.7
E2-10 (E4-10)	Motor Iron Loss for Torque Compensation	W	385	440	440	508	508	586	586	750
E5-01	Motor Code Selection (for PM Motors)	Hex.	123D	123D	123E	123E	123F	123F	1240	1240
L2-02	Momentary Power Loss Ride-Thru Time	s	2	2	2	2	2	2	2	2
L2-03	Momentary Power Loss Minimum Baseblock Time	s	0.9	1	1	1	1	1	1	1.1
L2-04	Momentary Power Loss Voltage Recovery Time	s	0.3	0.6	0.6	0.6	0.6	0.6	0.6	0.6
L3-24	Motor Acceleration Time for Inertia Calculations	s	0.265	0.244	0.244	0.317	0.317	0.355	0.355	0.323
L8-02	Overheat Alarm Level	°C	120	120	120	120	115	115	120	120
L8-35	Installation Method Selection	–	2	2	2	2	2	2	0	0
L8-38	Carrier Frequency Reduction Selection	–	2	2	2	2	2	2	2	2
n1-03	Hunting Prevention Time Constant	ms	10	10	10	10	10	10	10	10
n5-02	Motor Acceleration Time	s	0.265	0.244	0.244	0.317	0.317	0.355	0.355	0.323

<1> This parameter is available in models 4A0930 and 4A1200.

No.	Name	Unit	Default Settings							
–	Drive Model	–	4A0072		4A0088		4A0103		4A0139	
C6-01	Drive Duty Selection	–	HD	ND	HD	ND	HD	ND	HD	ND
o2-04	Drive Model Selection	Hex.	A1		A2		A3		A4	
E2-11 (E4-11)	Motor rated power	kW (HP)	30 (40)	37 (50)	37 (50-60)	45 (60)	45 (50-60)	55 (75)	55 (75)	75 (100)
b3-04	V/f Gain during Speed Search	%	100	100	100	100	100	80	80	60
b3-06	Output Current 1 during Speed Search	–	0.5	0.5	0.5	0.5	0.5	0.5	0.5	0.7
b3-07 <1>	Output Current 2 during Speed Search (Speed Estimation Type)	–	–	–	–	–	–	–	–	–
b3-08	Current Control Gain during Speed Search (Speed Estimation Type)	–	0.5	0.5	0.5	0.5	0.5	0.5	0.5	0.8
b3-26 <1>	Start Speed Search Select	–	–	–	–	–	–	–	–	–
b8-03	Energy Saving Control Filter Time Constant	s	0.50	0.50	0.50	0.50	0.50	2.00	2.00	2.00
b8-04	Energy Saving Coefficient Value	–	92.54	76.32	76.32	71.56	71.56	67.2	67.2	46.2
C5-17 (C5-37)	Motor Inertia	kgm^2	0.220	0.273	0.273	0.333	0.333	0.490	0.490	0.90
C6-02	Carrier Frequency Selection	–	1	7	1	7	1	7	1	7
E2-01 (E4-01)	Motor Rated Current	A	52.3	65.6	65.6	79.7	79.7	95	95	130
E2-02 (E4-02)	Motor Rated Slip	Hz	1.8	1.33	1.33	1.6	1.6	1.46	1.46	1.39
E2-03 (E4-03)	Motor No-Load Current	A	10.9	19.1	19.1	22	22	24	24	36
E2-05 (E4-05)	Motor Line-to-Line Resistance	Ω	0.269	0.155	0.155	0.122	0.122	0.088	0.088	0.092
E2-06 (E4-06)	Motor Leakage Inductance	%	20.7	18.8	18.8	19.9	19.9	20	20	20
E2-10 (E4-10)	Motor Iron Loss for Torque Compensation	W	750	925	925	1125	1125	1260	1260	1600
E5-01	Motor Code Selection (for PM Motors)	Hex.	1242	1242	1243	1243	1244	1244	1245	1245
L2-02	Momentary Power Loss Ride-Thru Time	s	2	2	2	2	2	2	2	2
L2-03	Momentary Power Loss Min. Basebl. Time	s	1.1	1.1	1.1	1.2	1.2	1.2	1.2	1.3
L2-04	Momentary Power Loss Volt. Recov. Time	s	0.6	0.6	0.6	0.6	0.6	1	1	1
L3-24	Motor Acceleration Time for Inertia Calculations	s	0.323	0.32	0.32	0.387	0.387	0.317	0.317	0.533
L8-02	Overheat Alarm Level	°C	120	120	110	110	120	120	130	130
L8-35	Installation Method Selection	–	0	0	0	0	0	0	0	0
L8-38	Carrier Frequency Reduction Selection	–	2	2	2	2	2	2	2	2
n1-03	Hunting Prevention Time Constant	ms	10	10	10	10	10	10	30	30
n5-02	Motor Acceleration Time	s	0.323	0.32	0.32	0.387	0.387	0.317	0.317	0.533

<1> This parameter is available in models 4A0930 and 4A1200.

No.	Name	Unit	Default Settings							
–	Drive Model	–	4A0165		4A0208		4A0250		4A0296	
C6-01	Drive Duty Selection	–	HD	ND	HD	ND	HD	ND	HD	ND
o2-04	Drive Model Selection	Hex.	A5		A6		A7		A8	
E2-11 (E4-11)	Motor rated power	kW (HP)	75 (100)	90 (125)	90 (125-150)	110 (150)	110 (150)	132 (200)	132 (200)	160 (250)
b3-04	V/f Gain during Speed Search	%	60	60	60	60	60	60	60	60
b3-06	Output Current 1 during Speed Search	–	0.7	0.7	0.7	0.7	0.7	0.7	0.7	0.7
b3-07 <1>	Output Current 2 during Speed Search (Speed Estimation Type)	–	–	–	–	–	–	–	–	–
b3-08	Current Control Gain during Speed Search (Speed Estimation Type)	–	0.8	0.8	0.8	0.8	0.8	0.8	0.8	0.8
b3-26 <1>	Start Speed Search Select	–	–	–	–	–	–	–	–	–
b8-03	Energy Saving Control Filter Time Constant	s	2.00	2.00	2.00	2.00	2.00	2.00	2.00	2.00
b8-04	Energy Saving Coefficient Value	–	46.2	38.91	38.91	36.23	36.23	32.79	32.79	30.13
C5-17 (C5-37)	Motor Inertia	kgm^2	0.90	1.10	1.10	1.90	1.90	2.10	2.10	3.30
C6-02	Carrier Frequency Selection	–	1	7	1	7	1	7	1	7
E2-01 (E4-01)	Motor Rated Current	A	130	156	156	190	190	223	223	270
E2-02 (E4-02)	Motor Rated Slip	Hz	1.39	1.4	1.4	1.4	1.4	1.38	1.38	1.35
E2-03 (E4-03)	Motor No-Load Current	A	36	40	40	49	49	58	58	70
E2-05 (E4-05)	Motor Line-to-Line Resistance	Ω	0.092	0.056	0.056	0.046	0.046	0.035	0.035	0.029
E2-06 (E4-06)	Motor Leakage Inductance	%	20	20	20	20	20	20	20	20
E2-10 (E4-10)	Motor Iron Loss for Torque Compensation	W	1600	1760	1760	2150	2150	2350	2350	2850
E5-01	Motor Code Selection (for PM Motors)	Hex.	1246	1246	1247	1247	1248	1248	1249	1249
L2-02	Momentary Power Loss Ride-Thru Time	s	2	2	2	2	2	2	2	2
L2-03	Momentary Power Loss Min. Basebl. Time	s	1.3	1.5	1.5	1.7	1.7	1.7	1.7	1.8
L2-04	Momentary Power Loss Volt. Recov. Time	s	1	1	1	1	1	1	1	1
L3-24	Motor Acceleration Time for Inertia Calculations	s	0.533	0.592	0.592	0.646	0.646	0.673	0.673	0.777
L8-02	Overheat Alarm Level	°C	130	130	120	120	120	120	125	125
L8-35	Installation Method Selection	–	0	0	0	0	0	0	0	0
L8-38	Carrier Frequency Reduction Selection	–	2	2	2	2	2	2	2	2
n1-03	Hunting Prevention Time Constant	ms	30	30	30	30	30	30	30	30
n5-02	Motor Acceleration Time	s	0.533	0.592	0.592	0.646	0.646	0.673	0.673	0.777

<1> This parameter is available in models 4A0930 and 4A1200.

No.	Name	Unit	Default Settings					
–	Drive Model	–	4A0362		4A0414		4A0515	
C6-01	Drive Duty Selection	–	HD	ND	HD	ND	HD	ND
o2-04	Drive Model Selection	Hex.	A9		AA		AC	
E2-11 (E4-11)	Motor rated power	kW (HP)	160 (250)	185 (300)	185 (300)	220 (350)	220 (350)	250 (400 -450)
b3-04	V/f Gain during Speed Search	%	60	60	60	60	60	60
b3-06	Output Current 1 during Speed Search	–	0.7	0.7	0.7	0.7	0.7	0.7
b3-07 <1>	Output Current 2 during Speed Search (Speed Estimation Type)	–	–	–	–	–	–	–
b3-08	Current Control Gain during Speed Search (Speed Estimation Type)	–	0.8	0.8	0.8	0.8	0.8	0.8
b3-26 <1>	Start Speed Search Select	–	–	–	–	–	–	–
b8-03	Energy Saving Control Filter Time Constant	s	2.00	2.00	2.00	2.00	2.00	2.00
b8-04	Energy Saving Coefficient Value	–	30.13	30.57	30.57	27.13	27.13	21.76
C5-17 (C5-37)	Motor Inertia	kgm^2	3.30	3.60	3.60	4.10	4.10	6.50
C6-02	Carrier Frequency Selection	–	1	7	1	7	1	7
E2-01 (E4-01)	Motor Rated Current	A	270	310	310	370	370	500
E2-02 (E4-02)	Motor Rated Slip	Hz	1.35	1.3	1.3	1.3	1.3	1.25
E2-03 (E4-03)	Motor No-Load Current	A	70	81	81	96	96	130
E2-05 (E4-05)	Motor Line-to-Line Resistance	Ω	0.029	0.025	0.025	0.02	0.02	0.014
E2-06 (E4-06)	Motor Leakage Inductance	%	20	20	20	20	20	20
E2-10 (E4-10)	Motor Iron Loss for Torque Compensation	W	2850	3200	3200	3700	3700	4700
E5-01	Motor Code Selection (for PM Motors)	Hex.	124A	124A	FFFF	FFFF	FFFF	FFFF
L2-02	Momentary Power Loss Ride-Thru Time	s	2	2	2	2	2	2
L2-03	Momentary Power Loss Min. Basebl. Time	s	1.8	1.9	1.9	2	2	2.1
L2-04	Momentary Power Loss Volt. Recov. Time	s	1	1	1	1	1	1
L3-24	Motor Acceleration Time for Inertia Calculations	s	0.777	0.864	0.864	0.91	0.91	1.392
L8-02	Overheat Alarm Level	°C	130	130	140	140	140	140
L8-35	Installation Method Selection	–	0	0	0	0	0	0
L8-38	Carrier Frequency Reduction Selection	–	2	2	2	2	2	2
n1-03	Hunting Prevention Time Constant	ms	30	30	100	100	100	100
n5-02	Motor Acceleration Time	s	0.777	0.864	0.864	0.91	0.91	1.392

<1> This parameter is available in models 4A0930 and 4A1200.

No.	Name	Unit	Default Settings					
–	Drive Model	–	4A0675		4A0930		4A1200	
C6-01	Drive Duty Selection	–	HD	ND	HD	ND	HD	ND
o2-04	Drive Model Selection	Hex.	AE		B0		B2	
E2-11 (E4-11)	Motor rated power	kW (HP)	315 (400 -450 -500)	355 (500 -550)	450 (650)	500 (750)	560 (900)	630 (1000)
b3-04	V/f Gain during Speed Search	%	60	60	60	60	60	60
b3-06	Output Current 1 during Speed Search	–	0.7	0.7	0.7	0.7	0.7	0.7
b3-07 <1>	Output Current 2 during Speed Search (Speed Estimation Type)	–	–	–	3.0	2.0	3.0	2.0
b3-08	Current Control Gain during Speed Search (Speed Estimation Type)	–	0.8	0.8	0.8	0.8	0.8	0.8
b3-26 <1>	Start Speed Search Select	–	–	–	1000	1000	1000	1000
b8-03	Energy Saving Control Filter Time Constant	s	2.00	2.00	2.00	2.00	2.00	2.00
b8-04	Energy Saving Coefficient Value	–	21.76	23.84	21.4	20.26	18.12	17.06
C5-17 (C5-37)	Motor Inertia	kgm^2	11.00	12.00	13.00	14.00	18.00	18.00
C6-02	Carrier Frequency Selection	–	1	7	1	1	1	1
E2-01 (E4-01)	Motor Rated Current	A	500	650	800	900	1090	1200
E2-02 (E4-02)	Motor Rated Slip	Hz	1.25	1	1	0.9	0.8	0.7
E2-03 (E4-03)	Motor No-Load Current	A	130	130	160	180	218	240
E2-05 (E4-05)	Motor Line-to-Line Resistance	Ω	0.014	0.012	0.01	0.009	0.007	0.006
E2-06 (E4-06)	Motor Leakage Inductance	%	20	20	20	20	20	20
E2-10 (E4-10)	Motor Iron Loss for Torque Compensation	W	4700	5560	7050	7833	9870	11123
E5-01	Motor Code Selection (for PM Motors)	Hex.	FFFF	FFFF	FFFF	FFFF	FFFF	FFFF
L2-02	Momentary Power Loss Ride-Thru Time	s	2	2	2	2	2	2
L2-03	Momentary Power Loss Min. Basebl. Time	s	2.1	2.3	2.8	3.1	4	4.6
L2-04	Momentary Power Loss Volt. Recov. Time	s	1	1	2.6	3	3.8	4.5
L3-24	Motor Acceleration Time for Inertia Calculations	s	1.392	1.667	2	2.222	2.857	3.333
L8-02	Overheat Alarm Level	°C	140	140	140	140	140	140
L8-35	Installation Method Selection	–	0	0	0	0	0	0
L8-38	Carrier Frequency Reduction Selection	–	2	2	2	2	2	2
n1-03	Hunting Prevention Time Constant	ms	100	100	100	100	100	100
n5-02	Motor Acceleration Time	s	1.392	1.667	2	2.222	2.857	3.333

<1> This parameter is available in models 4A0930 and 4A1200.

Table B.12 600 V Class Drives Default Settings by Drive Model and ND/HD Setting

No.	Name	Unit	Default Settings									
–	Drive Model	–	5A0003		5A0004		5A0006		5A0009		5A0011	
C6-01	Drive Duty Selection	–	HD	ND	HD	ND	HD	ND	HD	ND	HD	ND
			0	1	0	1	0	1	0	1	0	1
o2-04	Drive Model Selection	Hex.	C3		C4		C5		C7		C9	
E2-11 (E4-11)	Motor Rated Power	kW (HP)	0.75 (1)	1.5 (2)	1.5 (2)	2.2 (3)	2.2 (3)	3.7 (5)	3.7 (5)	5.5 (7.5)	5.5 (7.5)	7.5 (10)
b3-04	V/f Gain during Speed Search	%	100	100	100	100	100	100	100	100	100	100
b3-06	Output Current 1 during Speed Search	–	0.5	0.5	0.5	0.5	0.5	0.5	0.5	0.5	0.5	0.5
b3-07 <1>	Output Current 2 during Speed Search (Speed Estimation Type)	–	–	–	–	–	–	–	–	–	–	–
b3-08	Current Control Gain during Speed Search (Speed Estimation Type)	–	0.5	0.5	0.5	0.5	0.5	0.5	0.5	0.5	0.5	0.5
b3-26 <1>	Start Speed Search Select	–	–	–	–	–	–	–	–	–	–	–
b8-03	Energy Saving Control Filter Time Constant	s	0.50	0.50	0.50	0.50	0.50	0.50	0.50	0.50	0.50	0.50
b8-04	Energy Saving Coefficient Value	–	541.9	494.4	494.4	415.3	415.3	320.2	320.2	239.95	239.95	199.86
C5-17 (C5-37)	Motor Inertia	kgm^2	0.0028	0.0068	0.0068	0.0088	0.0088	0.0158	0.0158	0.0255	0.026	0.037
C6-02	Carrier Frequency Selection	–	1	7	1	7	1	7	1	7	1	7
E2-01 (E4-01)	Motor Rated Current	A	1.7	2.7	2.7	3.9	3.9	6.1	6.1	9	9	11
E2-02 (E4-02)	Motor Rated Slip	Hz	2.5	2.5	2.5	3.0	3.0	2.7	2.7	1.5	1.5	1.3
E2-03 (E4-03)	Motor No-Load Current	A	0.8	0.8	0.8	1.2	1.2	1.8	1.8	2.7	2.7	3.3
E2-05 (E4-05)	Motor Line-to-Line Resistance	Ω	21.9	13.72	13.72	8.825	8.825	4.936	4.936	2.601	2.601	1.446
E2-06 (E4-06)	Motor Leakage Inductance	%	18.3	18.3	18.3	18.7	18.7	19.3	19.3	18.2	18.2	15.5
E2-10 (E4-10)	Motor Iron Loss for Torque Compensation	W	53	53	53	77	77	130	130	193	193	263
L2-02	Momentary Power Loss Ride-Thru Time	s	0.2	0.2	0.3	0.3	0.5	0.5	0.5	0.5	0.8	0.8
L2-03	Momentary Power Loss Minimum Baseblock Time	s	0.5	0.5	0.5	0.5	0.5	0.8	0.8	0.8	0.8	1
L2-04	Momentary Power Loss Voltage Recovery Time	s	0.5	0.5	0.5	0.5	0.5	0.6	0.6	0.7	0.7	0.8
L3-24	Motor Acceleration Time for Inertia Calculations	s	0.142	0.166	0.166	0.145	0.145	0.154	0.154	0.168	0.168	0.175
L8-02	Overheat Alarm Level	°C	110	110	110	110	110	110	110	110	115	115
L8-35	Installation Method Selection	–	2	2	2	2	2	2	2	2	2	2
L8-38	Carrier Frequency Reduction Selection	–	2	2	2	2	2	2	2	2	2	2
n1-03	Hunting Prevention Time Constant	ms	10	10	10	10	10	10	10	10	10	10
n5-02	Motor Acceleration Time	s	0.142	0.166	0.166	0.145	0.145	0.154	0.154	0.168	0.168	0.175

<1> This parameter is available in models 4A0930 and 4A1200.

No.	Name	Unit	Default Settings							
–	Drive Model	–	5A0017		5A0022		5A0027		5A0032	
C6-01	Drive Duty Selection	–	HD	ND	HD	ND	HD	ND	HD	ND
			0	1	0	1	0	1	0	1
o2-04	Drive Model Selection	Hex.	CA		CC		CD		CE	
E2-11 (E4-11)	Motor Rated Power	kW (HP)	7.5 (10)	11 (15)	11 (15)	15 (20)	15 (20)	18.5 (25)	18.5 (25)	22 (30)
b3-04	V/f Gain during Speed Search	%	100	100	100	100	100	100	100	100
b3-06	Output Current 1 during Speed Search	–	0.5	0.5	0.5	0.5	0.5	0.5	0.5	0.5
b3-07 <1>	Output Current 2 during Speed Search (Speed Estimation Type)	–	–	–	–	–	–	–	–	–
b3-08	Current Control Gain during Speed Search (Speed Estimation Type)	–	0.5	0.5	0.5	0.5	0.5	0.5	0.5	0.5
b3-26 <1>	Start Speed Search Select	–	–	–	–	–	–	–	–	–
b8-03	Energy Saving Control Filter Time Constant	s	0.5	0.5	0.5	0.5	0.5	0.5	0.5	0.5
b8-04	Energy Saving Coefficient Value	–	200	172	172	154	154	140	140	129
C5-17 (C5-37)	Motor Inertia	kgm^2	0.037	0.053	0.053	0.076	0.076	0.138	0.138	0.165
C6-02	Carrier Frequency Selection	–	1	7	1	7	1	7	1	7
E2-01 (E4-01)	Motor Rated Current	A	11	17	17	22	22	27	27	32
E2-02 (E4-02)	Motor Rated Slip	Hz	1.3	1.7	1.7	1.6	1.6	1.67	1.67	1.7
E2-03 (E4-03)	Motor No-Load Current	A	3.3	5.1	5.1	6.6	6.6	8.1	8.1	9.6
E2-05 (E4-05)	Motor Line-to-Line Resistance	Ω	1.45	1.17	1.17	0.9	0.9	0.66	0.66	0.52
E2-06 (E4-06)	Motor Leakage Inductance	%	15.5	19.6	19.6	17.2	17.2	20.1	20.1	23.5
E2-10 (E4-10)	Motor Iron Loss for Torque Compensation	W	263	385	385	440	440	508	508	586
L2-02	Momentary Power Loss Ride-Thru Time	s	1	1	2	2	2	2	2	2
L2-03	Momentary Power Loss Minimum Baseblock Time	s	1	1	1	1.2	1.2	1.2	1.2	1.2
L2-04	Momentary Power Loss Voltage Recovery Time	s	0.8	0.9	0.9	1	1	1	1	1
L3-24	Motor Acceleration Time for Inertia Calculations	s	0.18	0.27	0.27	0.24	0.24	0.32	0.32	0.36
L8-02	Overheat Alarm Level	°C	120	120	120	120	115	115	115	115
L8-35	Installation Method Selection	–	2	2	2	2	2	2	2	2
L8-38	Carrier Frequency Reduction Selection	–	2	2	2	2	2	2	2	2
n1-03	Hunting Prevention Time Constant	ms	10	10	10	10	10	10	10	10
n5-02	Motor Acceleration Time	s	0.18	0.27	0.27	0.24	0.24	0.32	0.32	0.36

<1> This parameter is available in models 4A0930 and 4A1200.

No.	Name	Unit	Default Settings					
–	Drive Model	–	5A0041		5A0052		5A0062	
C6-01	Drive Duty Selection	–	HD	ND	HD	ND	HD	ND
			0	1	0	1	0	1
o2-04	Drive Model Selection	Hex.	CF		D1		D2	
E2-11 (E4-11)	Motor Rated Power	kW (HP)	22 (25-30)	30 (40)	30 (40)	37 (50)	37 (50-60)	45 (60)
b3-04	V/f Gain during Speed Search	%	100	80	80	80	80	80
b3-06	Output Current 1 during Speed Search	–	0.5	0.5	0.5	0.5	0.5	0.5
b3-07 <1>	Output Current 2 during Speed Search (Speed Estimation Type)	–	–	–	–	–	–	–
b3-08	Current Control Gain during Speed Search (Speed Estimation Type)	–	0.5	0.5	0.5	0.5	0.5	0.5
b3-26 <1>	Start Speed Search Select	–	–	–	–	–	–	–
b8-03	Energy Saving Control Filter Time Constant	s	0.5	0.5	0.5	0.5	0.5	0.5
b8-04	Energy Saving Coefficient Value	–	128.65	115.57	115.57	97.01	97.01	90.07
C5-17 (C5-37)	Motor Inertia	kgm^2	0.165	0.220	0.220	0.273	0.273	0.333
C6-02	Carrier Frequency Selection	–	1	7	1	7	1	7
E2-01 (E4-01)	Motor Rated Current	A	32	41	41	52	52	62
E2-02 (E4-02)	Motor Rated Slip	Hz	1.7	1.8	1.8	1.33	1.33	1.6
E2-03 (E4-03)	Motor No-Load Current	A	9.6	12.3	12.3	15.6	15.6	18.8
E2-05 (E4-05)	Motor Line-to-Line Resistance	Ω	0.516	0.438	0.438	0.267	0.267	0.21
E2-06 (E4-06)	Motor Leakage Inductance	%	23.5	20.7	20.7	18.8	18.8	19.9
E2-10 (E4-10)	Motor Iron Loss for Torque Compensation	W	586	750	750	925	925	1125
L2-02	Momentary Power Loss Ride-Thru Time	s	2	2	2	2	2	2
L2-03	Momentary Power Loss Minimum Baseblock Time	s	1.2	1.2	1.2	1.2	1.2	1.5
L2-04	Momentary Power Loss Voltage Recovery Time	s	1	1.1	1.1	1.2	1.2	1.3
L3-24	Motor Acceleration Time for Inertia Calculations	s	0.355	0.323	0.323	0.32	0.32	0.387
L8-02	Overheat Alarm Level	°C	110	110	110	110	110	110
L8-35	Installation Method Selection	–	2	2	2	2	2	2
L8-38	Carrier Frequency Reduction Selection	–	2	2	2	2	2	2
n1-03	Hunting Prevention Time Constant	ms	10	10	10	10	10	10
n5-02	Motor Acceleration Time	s	0.355	0.323	0.323	0.32	0.32	0.387

<1> This parameter is available in models 4A0930 and 4A1200.

No.	Name	Unit	Default Settings			
–	Drive Model	–	5A0077		5A0099	
C6-01	Drive Duty Selection	–	HD	ND	HD	ND
			0	1	0	1
o2-04	Drive Model Selection	Hex.	D3		D4	
E2-11 (E4-11)	Motor Rated Power	kW (HP)	45 (50-60)	55 (75)	55 (75)	75 (100)
b3-04	V/f Gain during Speed Search	%	80	80	80	80
b3-06	Output Current 1 during Speed Search	–	0.5	0.5	0.5	0.5
b3-07 <1>	Output Current 2 during Speed Search (Speed Estimation Type)	–	–	–	–	–
b3-08	Current Control Gain during Speed Search (Speed Estimation Type)	–	0.5	0.5	0.5	0.5
b3-26 <1>	Start Speed Search Select	–	–	–	–	–
b8-03	Energy Saving Control Filter Time Constant	s	0.5	2	2	2
b8-04	Energy Saving Coefficient Value	–	90.07	80.87	80.87	70.07
C5-17 (C5-37)	Motor Inertia	kgm^2	0.333	0.490	0.49	0.90
C6-02	Carrier Frequency Selection	–	1	7	1	7
E2-01 (E4-01)	Motor Rated Current	A	62	77	77	99
E2-02 (E4-02)	Motor Rated Slip	Hz	1.6	1.46	1.46	1.39
E2-03 (E4-03)	Motor No-Load Current	A	18.8	23.1	23.1	29.7
E2-05 (E4-05)	Motor Line-to-Line Resistance	Ω	0.21	0.15	0.15	0.099
E2-06 (E4-06)	Motor Leakage Inductance	%	19.9	20	20	20
E2-10 (E4-10)	Motor Iron Loss for Torque Compensation	W	1125	1260	1260	1600
L2-02	Momentary Power Loss Ride-Thru Time	s	2	2	2	2
L2-03	Momentary Power Loss Minimum Baseblock Time	s	1.5	1.8	1.8	1.8
L2-04	Momentary Power Loss Voltage Recovery Time	s	1.3	1.5	1.5	1.6
L3-24	Motor Acceleration Time for Inertia Calculations	s	0.387	0.317	0.317	0.533
L8-02	Overheat Alarm Level	°C	110	110	110	110
L8-35	Installation Method Selection	–	2	2	2	2
L8-38	Carrier Frequency Reduction Selection	–	2	2	2	2
n1-03	Hunting Prevention Time Constant	ms	10	10	30	30
n5-02	Motor Acceleration Time	s	0.387	0.317	0.317	0.533

<1> This parameter is available in models 4A0930 and 4A1200.

No.	Name	Unit	Default Settings							
–	Drive Model	–	5A0125		5A0145		5A0192		5A0242	
C6-01	Drive Duty Selection	–	HD	ND	HD	ND	HD	ND	HD	ND
			0	1	0	1	0	1	0	1
o2-04	Drive Model Selection	Hex.	D5		D6		D7		D9	
E2-11 (E4-11)	Motor Rated Power	kW (HP)	75 (100)	90 (125)	90 (125)	110 (150)	110 (150)	160 (200)	160 (200)	185 (250)
b3-04	V/f Gain during Speed Search	%	80	80	80	80	80	80	80	80
b3-06	Output Current 1 during Speed Search	–	0.5	0.5	0.5	0.5	0.5	0.5	0.5	0.5
b3-07 <1>	Output Current 2 during Speed Search (Speed Estimation Type)	–	–	–	–	–	–	–	–	–
b3-08	Current Control Gain during Speed Search (Speed Estimation Type)	–	0.5	0.5	0.5	0.5	0.5	0.5	0.5	0.5
b3-26 <1>	Start Speed Search Select	–	–	–	–	–	–	–	–	–
b8-03	Energy Saving Control Filter Time Constant	s	2.00	2.00	2.00	2.00	2.00	2.00	2.00	2.00
b8-04	Energy Saving Coefficient Value	–	70.07	61.50	61.50	58.67	58.67	49.90	49.90	42.90
C5-17 (C5-37)	Motor Inertia	kgm^2	0.90	1.10	1.10	1.90	1.90	2.10	3.30	4.10
C6-02	Carrier Frequency Selection	–	1	7	1	7	1	7	1	7
E2-01 (E4-01)	Motor Rated Current	A	99	125	130	145	172	192	200	242
E2-02 (E4-02)	Motor Rated Slip	Hz	1.39	1.39	1.39	1.40	1.40	1.35	1.35	1.35
E2-03 (E4-03)	Motor No-Load Current	A	29.7	37.5	37.5	43.2	43.2	57.6	57.6	57.6
E2-05 (E4-05)	Motor Line-to-Line Resistance	Ω	0.099	0.079	0.079	0.060	0.060	0.037	0.037	0.037
E2-06 (E4-06)	Motor Leakage Inductance	%	20.0	20.0	20.0	20.0	20.0	20.0	20.0	20.0
E2-10 (E4-10)	Motor Iron Loss for Torque Compensation	W	1600	2150	2150	2150	2150	2850	2850	2850
L2-02	Momentary Power Loss Ride-Thru Time	s	2.0	2.0	2.0	2.0	2.0	2.0	2.0	2.0
L2-03	Momentary Power Loss Minimum Baseblock Time	s	1.8	2.0	2.0	2.0	2.0	2.0	2.0	2.0
L2-04	Momentary Power Loss Voltage Recovery Time	s	1.6	1.7	1.7	1.8	1.8	2.0	2.0	2.0
L3-24	Motor Acceleration Time for Inertia Calculations	s	0.533	0.592	0.592	0.646	0.646	0.673	0.777	0.864
L8-02	Overheat Alarm Level	°C	110	110	110	110	110	110	110	110
L8-35	Installation Method Selection	–	0	0	0	0	0	0	0	0
L8-38	Carrier Frequency Reduction Selection	–	2	2	2	2	2	2	2	2
n1-03	Hunting Prevention Time Constant	ms	30	30	30	30	30	30	30	30
n5-02	Motor Acceleration Time	s	0.533	0.592	0.592	0.646	0.646	0.673	0.777	0.864

<1> This parameter is available in models 4A0930 and 4A1200.

B.19 Parameters Changed by Motor Code Selection (for PM Motors)

The following tables show parameters and default settings that change with the motor code selection E5-01 when Open Loop Vector for PM motors is used.

◆ Yaskawa SMRA Series SPM Motor

Table B.13 200 V, 1800 r/min Type Yaskawa SMRA Series SPM Motor Settings

No.	Name	Unit	Default Settings				
E5-01	Motor Code Selection (for PM Motors)	–	0002	0003	0005	0006	0008
	Voltage Class	V	200	200	200	200	200
	Rated Power	kW	0.4	0.75	1.5	2.2	3.7
	Rated Speed	r/min	1800	1800	1800	1800	1800
E5-02	Motor Rated Power (for PM Motors)	kW	0.4	0.75	1.5	2.2	3.7
E5-03	Motor Rated Current (for PM Motors)	A	2.1	4.0	6.9	10.8	17.4
E5-04	Number of Motor Poles (for PM Motors)	–	8	8	8	8	8
E5-05	Motor Stator Resistance (r1) (for PM Motors)	Ω	2.47	1.02	0.679	0.291	0.169
E5-06	Motor d-Axis Inductance (Ld) (for PM Motors)	mH	12.7	4.8	3.9	3.6	2.5
E5-07	Motor q-Axis Inductance (Lq) (for PM Motors)	mH	12.7	4.8	3.9	3.6	2.5
E5-09	Motor Induction Voltage Constant 1 (Ke) (for PM Motors)	mVs /rad	0	0	0	0	0
E5-24	Motor Induction Voltage Constant 2 (Ke) (for PM Motors)	mV/ (r/min)	62.0	64.1	73.4	69.6	72.2
E1-04	Maximum Output Frequency	Hz	120	120	120	120	120
E1-05	Maximum Voltage	V	200.0	200.0	200.0	200.0	200.0
E1-06	Base Frequency	Hz	120	120	120	120	120
E1-09	Minimum Output Frequency	Hz	6	6	6	6	6
C5-17	Motor Inertia	kgm^2	0.0007	0.0014	0.0021	0.0032	0.0046
L3-24 <1>	Motor Acceleration Time for Inertia Calculations	s	0.064	0.066	0.049	0.051	0.044
n5-02	Motor Acceleration Time	s	0.064	0.066	0.049	0.051	0.044
n8-49	d-Axis Current for High Efficiency Control (for PM Motors) (OLV/PM)	%	0	0	0	0	0

<1> Default setting value varies depending on parameter o2-04, Drive Model Selection.

Table B.14 200 V, 3600 r/min Type Yaskawa SMRA Series SPM Motor Settings

No.	Name	Unit	Default Settings			
E5-01	Motor Code Selection (for PM Motors)	–	0103	0105	0106	0108
	Voltage Class	V	200	200	200	200
	Rated Power	kW	0.75	1.5	2.2	3.7
	Rated Speed	r/min	3600	3600	3600	3600
E5-02	Motor Rated Power (for PM Motors)	kW	0.75	1.5	2.2	3.7
E5-03	Motor Rated Current (for PM Motors)	A	4.1	8.0	10.5	16.5
E5-04	Number of Motor Poles (for PM Motors)	–	8	8	8	8
E5-05	Motor Stator Resistance (r1) (for PM Motors)	Ω	0.538	0.20	0.15	0.097
E5-06	Motor d-Axis Inductance (Ld) (for PM Motors)	mH	3.2	1.3	1.1	1.1
E5-07	Motor q-Axis Inductance (Lq) (for PM Motors)	mH	3.2	1.3	1.1	1.1
E5-09	Motor Induction Voltage Constant 1 (Ke) (for PM Motors)	mVs /rad	0	0	0	0
E5-24	Motor Induction Voltage Constant 2 (Ke) (for PM Motors)	mV/ (r/min)	32.4	32.7	36.7	39.7
E1-04	Maximum Output Frequency	Hz	240	240	240	240

No.	Name	Unit	Default Settings			
E1-05	Maximum Voltage	V	200.0	200.0	200.0	200.0
E1-06	Base Frequency	Hz	240	240	240	240
E1-09	Minimum Output Frequency	Hz	12	12	12	12
C5-17	Motor Inertia	kgm^2	0.0007	0.0014	0.0021	0.0032
L3-24 <1>	Motor Acceleration Time for Inertia Calculations	s	0.137	0.132	0.132	0.122
n5-02	Motor Acceleration Time	s	0.137	0.132	0.132	0.122
n8-49	d-Axis Current for High Efficiency Control (for PM Motors) (OLV/PM)	%	0	0	0	0

<1> Default setting value varies depending on parameter o2-04, Drive Model Selection.

◆ Yaskawa SSR1 Series IPM Motor (For Derated Torque)

Table B.15 200 V, 1750 r/min Type Yaskawa SSR1 Series IPM Motor

No.	Name	Unit	Default Settings							
E5-01	Motor Code Selection (for PM Motors)	–	1202	1203	1205	1206	1208	120A	120B	120D
	Voltage Class	V	200	200	200	200	200	200	200	200
	Rated Power	kW	0.4	0.75	1.5	2.2	3.7	5.5	7.5	11
	Rated Speed	r/min	1750	1750	1750	1750	1750	1750	1750	1750
E5-02	Motor Rated Power (for PM Motors)	kW	0.4	0.75	1.5	2.2	3.7	5.5	7.5	11.0
E5-03	Motor Rated Current (for PM Motors)	A	1.77	3.13	5.73	8.44	13.96	20.63	28.13	41.4
E5-04	Number of Motor Poles (for PM Motors)	–	6	6	6	6	6	6	6	6
E5-05	Motor Stator Resistance (r1) (for PM Motors)	Ω	8.233	2.284	1.470	0.827	0.455	0.246	0.198	0.094
E5-06	Motor d-Axis Inductance (Ld) (for PM Motors)	mH	54.84	23.02	17.22	8.61	7.20	4.86	4.15	3.40
E5-07	Motor q-Axis Inductance (Lq) (for PM Motors)	mH	64.10	29.89	20.41	13.50	10.02	7.43	5.91	3.91
E5-09	Motor Induction Voltage Constant 1 (Ke) (for PM Motors)	mVs /rad	223.7	220.3	240.8	238.0	238.7	239.6	258.2	239.3
E5-24	Motor Induction Voltage Constant 2 (Ke) (for PM Motors)	mV/ (r/min)	0.0	0.0	0.0	0.0	0.0	0.0	0.0	0.0
E1-04	Maximum Output Frequency	r/min (Hz)	1750 (87.5)	1750 (87.5)	1750 (87.5)	1750 (87.5)	1750 (87.5)	1750 (87.5)	1750 (87.5)	1750 (87.5)
E1-05	Maximum Voltage	V	190.0	190.0	190.0	190.0	190.0	190.0	190.0	190.0
E1-06	Base Frequency	r/min (Hz)	1750 (87.5)	1750 (87.5)	1750 (87.5)	1750 (87.5)	1750 (87.5)	1750 (87.5)	1750 (87.5)	1750 (87.5)
E1-09	Minimum Output Frequency	r/min (Hz)	88 (4.4)	88 (4.4)	88 (4.4)	88 (4.4)	88 (4.4)	88 (4.4)	88 (4.4)	88 (4.4)
C5-17	Motor Inertia	kgm^2	0.0011	0.0017	0.0023	0.0043	0.0083	0.014	0.017	0.027
L3-24 <1>	Motor Acceleration Time for Inertia Calculations	s	0.092	0.076	0.052	0.066	0.075	0.083	0.077	0.084
n5-02	Motor Acceleration Time	s	0.092	0.076	0.052	0.066	0.075	0.083	0.077	0.084
n8-49	d-Axis Current for High Efficiency Control (for PM Motors) (OLV/PM)	%	-7.6	-11.5	-9.1	-19.0	-18.7	-23.4	-18.5	-10.9

<1> Default setting value varies depending on parameter o2-04, Drive Model Selection.

Table B.16 200 V, 1750 r/min Type Yaskawa SSR1 Series IPM Motor

No.	Name	Unit	Default Settings							
E5-01	Motor Code Selection (for PM Motors)	–	120E	120F	1210	1212	1213	1214	1215	1216
	Voltage Class	V	200	200	200	200	200	200	200	200
	Rated Power	kW	15	18	22	30	37	45	55	75
	Rated Speed	r/min	1750	1750	1750	1750	1750	1750	1750	1750
E5-02	Motor Rated Power (for PM Motors)	kW	15.0	18.00	22.00	30.00	37.00	45.00	55.00	75.00
E5-03	Motor Rated Current (for PM Motors)	A	55.4	68.2	80.6	105.2	131.3	153.1	185.4	257.3
E5-04	Number of Motor Poles (for PM Motors)	–	6	6	6	6	6	6	6	6
E5-05	Motor Stator Resistance (r1) (for PM Motors)	Ω	0.066	0.051	0.037	0.030	0.020	0.014	0.012	0.006
E5-06	Motor d-Axis Inductance (Ld) (for PM Motors)	mH	2.45	2.18	1.71	1.35	0.99	0.83	0.79	0.44
E5-07	Motor q-Axis Inductance (Lq) (for PM Motors)	mH	3.11	2.55	2.05	1.82	1.28	1.01	0.97	0.56
E5-09	Motor Induction Voltage Constant 1 (Ke) (for PM Motors)	mVs /rad	248.1	253.6	250.0	280.9	264.2	280.4	311.9	268.0
E5-24	Motor Induction Voltage Constant 2 (Ke) (for PM Motors)	mV/ (r/min)	0.0	0.0	0.0	0.0	0.0	0.0	0.0	0.0
E1-04	Maximum Output Frequency	r/min (Hz)	1750 (87.5)	1750 (87.5)	1750 (87.5)	1750 (87.5)	1750 (87.5)	1750 (87.5)	1750 (87.5)	1750 (87.5)
E1-05	Maximum Voltage	V	190.0	190.0	190.0	190.0	190.0	190.0	190.0	190.0
E1-06	Base Frequency	r/min (Hz)	1750 (87.5)	1750 (87.5)	1750 (87.5)	1750 (87.5)	1750 (87.5)	1750 (87.5)	1750 (87.5)	1750 (87.5)
E1-09	Minimum Output Frequency	r/min (Hz)	88 (4.4)	88 (4.4)	88 (4.4)	88 (4.4)	88 (4.4)	88 (4.4)	88 (4.4)	88 (4.4)
C5-17	Motor Inertia	kgm^2	0.046	0.55	0.064	0.116	0.140	0.259	0.31	0.42
L3-24 <1>	Motor Acceleration Time for Inertia Calculations	s	0.102	0.101	0.098	0.130	0.127	0.193	0.191	0.187
n5-02	Motor Acceleration Time	s	0.102	0.101	0.098	0.130	0.127	0.193	0.191	0.187
n8-49	d-Axis Current for High Efficiency Control (for PM Motors) (OLV/PM)	%	-16.5	-11.3	-12.8	-16.8	-15.6	-10.7	-9.6	-13.3

<1> Default setting value varies depending on parameter o2-04, Drive Model Selection.

Table B.17 400 V, 1750 r/min Type Yaskawa SSR1 Series IPM Motor

No.	Name	Unit	Default Settings							
E5-01	Motor Code Selection (for PM Motors)	–	1232	1233	1235	1236	1238	123A	123B	123D
	Voltage Class	V	400	400	400	400	400	400	400	400
	Rated Power	kW	0.4	0.75	1.5	2.2	3.7	5.5	7.5	11
	Rated Speed	r/min	1750	1750	1750	1750	1750	1750	1750	1750
E5-02	Motor Rated Power (for PM Motors)	kW	0.4	0.75	1.5	2.2	3.7	5.5	7.5	11.0
E5-03	Motor Rated Current (for PM Motors)	A	0.89	1.56	2.81	4.27	7.08	10.31	13.65	20.7
E5-04	Number of Motor Poles (for PM Motors)	–	6	6	6	6	6	6	6	6
E5-05	Motor Stator Resistance (r1) (for PM Motors)	Ω	25.370	9.136	6.010	3.297	1.798	0.982	0.786	0.349
E5-06	Motor d-Axis Inductance (Ld) (for PM Motors)	mH	169.00	92.08	67.71	34.40	32.93	22.7	16.49	13.17
E5-07	Motor q-Axis Inductance (Lq) (for PM Motors)	mH	197.50	119.56	81.71	54.00	37.70	26.80	23.46	15.60

No.	Name	Unit	Default Settings							
E5-09	Motor Induction Voltage Constant 1 (Ke) (for PM Motors)	mVs /rad	392.6	440.6	478.3	466.3	478.8	478.1	520.0	481.5
E5-24	Motor Induction Voltage Constant 2 (Ke) (for PM Motors)	mV/ (r/min)	0.0	0.0	0.0	0.0	0.0	0.0	0.0	0.0
E1-04	Maximum Output Frequency	r/min (Hz)	1750 (87.5)	1750 (87.5)	1750 (87.5)	1750 (87.5)	1750 (87.5)	1750 (87.5)	1750 (87.5)	1750 (87.5)
E1-05	Maximum Voltage	V	380.0	380.0	380.0	380.0	380.0	380.0	380.0	380.0
E1-06	Base Frequency	r/min (Hz)	1750 (87.5)	1750 (87.5)	1750 (87.5)	1750 (87.5)	1750 (87.5)	1750 (87.5)	1750 (87.5)	1750 (87.5)
E1-09	Minimum Output Frequency	r/min (Hz)	88 (4.4)	88 (4.4)	88 (4.4)	88 (4.4)	88 (4.4)	88 (4.4)	88 (4.4)	88 (4.4)
C5-17	Motor Inertia	kgm^2	0.0011	0.0017	0.0023	0.0043	0.0083	0.014	0.017	0.027
L3-24 <1>	Motor Acceleration Time for Inertia Calculations	s	0.092	0.076	0.052	0.066	0.075	0.083	0.077	0.084
n5-02	Motor Acceleration Time	s	0.092	0.076	0.052	0.066	0.075	0.083	0.077	0.084
n8-49	d-Axis Current for High Efficiency Control (for PM Motors) (OLV/PM)	%	-8.6	-11.5	-10.3	-19.8	-8.5	-11.0	-18.6	-12.5

<1> Default setting value varies depending on parameter o2-04, Drive Model Selection.

Table B.18 400 V, 1750 r/min Type Yaskawa SSR1 Series IPM Motor

No.	Name	Unit	Default Settings							
E5-01	Motor Code Selection (for PM Motors)	–	123E	123F	1240	1242	1243	1244	1245	1246
	Voltage Class	V	400	400	400	400	400	400	400	400
	Rated Power	kW	15	18	22	30	37	45	55	75
	Rated Speed	r/min	1750	1750	1750	1750	1750	1750	1750	1750
E5-02	Motor Rated Power (for PM Motors)	kW	15	18.50	22.00	30.00	37.00	45.00	55.00	75.00
E5-03	Motor Rated Current (for PM Motors)	A	27.5	33.4	39.8	52.0	65.8	77.5	92.7	126.6
E5-04	Number of Motor Poles (for PM Motors)	–	6	6	6	6	6	6	6	6
E5-05	Motor Stator Resistance (r1) (for PM Motors)	Ω	0.272	0.207	0.148	0.235	0.079	0.054	0.049	0.029
E5-06	Motor d-Axis Inductance (Ld) (for PM Motors)	mH	10.30	8.72	6.81	5.4	4.08	3.36	3.16	2.12
E5-07	Motor q-Axis Inductance (Lq) (for PM Motors)	mH	12.77	11.22	8.47	7.26	5.12	3.94	3.88	2.61
E5-09	Motor Induction Voltage Constant 1 (Ke) (for PM Motors)	mVs /rad	498.8	509.5	503.9	561.7	528.5	558.1	623.8	594.5
E5-24	Motor Induction Voltage Constant 2 (Ke) (for PM Motors)	mV/ (r/min)	0.0	0.0	0.0	0.0	0.0	0.0	0.0	0.0
E1-04	Maximum Output Frequency	r/min (Hz)	1750 (87.5)	1750 (87.5)	1750 (87.5)	1750 (87.5)	1750 (87.5)	1750 (87.5)	1750 (87.5)	1750 (87.5)
E1-05	Maximum Voltage	V	380.0	380.0	380.0	380.0	380.0	380.0	380.0	380.0
E1-06	Base Frequency	r/min (Hz)	1750 (87.5)	1750 (87.5)	1750 (87.5)	1750 (87.5)	1750 (87.5)	1750 (87.5)	1750 (87.5)	1750 (87.5)
E1-09	Minimum Output Frequency	r/min (Hz)	88 (4.4)	88 (4.4)	88 (4.4)	88 (4.4)	88 (4.4)	88 (4.4)	88 (4.4)	88 (4.4)
C5-17	Motor Inertia	kgm^2	0.046	0.055	0.064	0.116	0.140	0.259	0.31	0.42
L3-24 <1>	Motor Acceleration Time for Inertia Calculations	s	0.102	0.101	0.098	0.130	0.127	0.193	0.191	0.187
n5-02	Motor Acceleration Time	s	0.102	0.101	0.098	0.130	0.127	0.193	0.191	0.187
n8-49	d-Axis Current for High Efficiency Control (for PM Motors) (OLV/PM)	%	-15.5	-17.9	-15.1	-16.8	-14.1	-8.8	-9.6	-10.3

<1> Default setting value varies depending on parameter o2-04, Drive Model Selection.

Table B.19 400 V, 1750 r/min Type Yaskawa SSR1 Series IPM Motor

No.	Name	Unit	Default Settings							
E5-01	Motor Code Selection (for PM Motors)	–	1247	1248	1249	124A	1302	1303	1305	1306
	Voltage Class	V	400	400	400	400	200	200	200	200
	Rated Power	kW	90	110	132	160	0.4	0.75	1.5	2.2
	Rated Speed	r/min	1750	1750	1750	1750	1450	1450	1450	1450
E5-02	Motor Rated Power (for PM Motors)	kW	90.00	110.00	132.00	160.00	0.4	0.75	1.5	2.2
E5-03	Motor Rated Current (for PM Motors)	A	160.4	183.3	222.9	267.7	1.88	3.13	5.63	8.33
E5-04	Number of Motor Poles (for PM Motors)	–	6	6	6	6	6	6	6	6
E5-05	Motor Stator Resistance (r1) (for PM Motors)	Ω	0.019	0.017	0.012	0.008	3.190	1.940	1.206	0.665
E5-06	Motor d-Axis Inductance (Ld) (for PM Motors)	mH	1.54	1.44	1.21	0.97	32.15	26.12	14.72	12.27
E5-07	Motor q-Axis Inductance (Lq) (for PM Motors)	mH	2.06	2.21	1.46	1.28	41.74	34.30	20.15	14.77
E5-09	Motor Induction Voltage Constant 1 (Ke) (for PM Motors)	mVs /rad	524.1	583.7	563.6	601.2	264.3	269.6	284.3	287.1
E5-24	Motor Induction Voltage Constant 2 (Ke) (for PM Motors)	mV/ (r/min)	0.0	0.0	0.0	0.0	0.0	0.0	0.0	0.0
E1-04	Maximum Output Frequency	r/min (Hz)	1750 (87.5)	1750 (87.5)	1750 (87.5)	1750 (87.5)	1450 (72.5)	1450 (72.5)	1450 (72.5)	1450 (72.5)
E1-05	Maximum Voltage	V	380.0	380.0	380.0	380.0	190.0	190.0	190.0	190.0
E1-06	Base Frequency	r/min (Hz)	1750 (87.5)	1750 (87.5)	1750 (87.5)	1750 (87.5)	1450 (72.5)	1450 (72.5)	1450 (72.5)	1450 (72.5)
E1-09	Minimum Output Frequency	r/min (Hz)	88 (4.4)	88 (4.4)	88 (4.4)	88 (4.4)	72 (3.6)	72 (3.6)	72 (3.6)	72 (3.6)
C5-17	Motor Inertia	kgm^2	0.56	0.83	0.96	1.61	0.0017	0.0023	0.0043	0.0083
L3-24 <1>	Motor Acceleration Time for Inertia Calculations	s	0.208	0.254	0.243	0.338	0.098	0.071	0.066	0.087
n5-02	Motor Acceleration Time	s	0.208	0.254	0.243	0.338	0.098	0.071	0.066	0.087
n8-49	d-Axis Current for High Efficiency Control (for PM Motors) (OLV/PM)	%	-17.0	-21.7	-10.9	-13.2	-6.6	-10.9	-13.5	-9.0

<1> Default setting value varies depending on parameter o2-04, Drive Model Selection.

Table B.20 200 V, 1450 r/min Type Yaskawa SSR1 Series IPM Motor

No.	Name	Unit	Default Settings							
E5-01	Motor Code Selection (for PM Motors)	–	1308	130A	130B	130D	130E	130F	1310	1312
	Voltage Class	V	200	200	200	200	200	200	200	200
	Rated Power	kW	3.7	5.5	7.5	11	15	18	22	30
	Rated Speed	r/min	1450	1450	1450	1450	1450	1450	1450	1450
E5-02	Motor Rated Power (for PM Motors)	kW	3.7	5.5	7.5	11.0	15.00	18.00	22.00	30.00
E5-03	Motor Rated Current (for PM Motors)	A	14.17	20.63	27.71	39.6	55.5	65.6	75.1	105.2
E5-04	Number of Motor Poles (for PM Motors)	–	6	6	6	6	6	6	6	6
E5-05	Motor Stator Resistance (r1) (for PM Motors)	Ω	0.341	0.252	0.184	0.099	0.075	0.057	0.041	0.034
E5-06	Motor d-Axis Inductance (Ld) (for PM Motors)	mH	8.27	6.49	6.91	4.07	3.29	2.53	1.98	1.75
E5-07	Motor q-Axis Inductance (Lq) (for PM Motors)	mH	9.81	7.74	7.66	4.65	3.84	3.01	2.60	2.17

No.	Name	Unit	Default Settings							
E5-09	Motor Induction Voltage Constant 1 (Ke) (for PM Motors)	mVs /rad	284.5	298.0	335.0	303.9	311.2	300.9	327.7	354.2
E5-24	Motor Induction Voltage Constant 2 (Ke) (for PM Motors)	mV/ (r/min)	0.0	0.0	0.0	0.0	0.0	0.0	0.0	0.0
E1-04	Maximum Output Frequency	r/min (Hz)	1450 (72.5)	1450 (72.5)	1450 (72.5)	1450 (72.5)	1450 (72.5)	1450 (72.5)	1450 (72.5)	1450 (72.5)
E1-05	Maximum Voltage	V	190.0	190.0	190.0	190.0	190.0	190.0	190.0	190.0
E1-06	Base Frequency	r/min (Hz)	1450 (72.5)	1450 (72.5)	1450 (72.5)	1450 (72.5)	1450 (72.5)	1450 (72.5)	1450 (72.5)	1450 (72.5)
E1-09	Minimum Output Frequency	r/min (Hz)	72 (3.6)	72 (3.6)	72 (3.6)	72 (3.6)	72 (3.6)	72 (3.6)	72 (3.6)	72 (3.6)
C5-17	Motor Inertia	kgm^2	0.0136	0.017	0.027	0.046	0.055	0.064	0.116	0.140
L3-24 <1>	Motor Acceleration Time for Inertia Calculations	s	0.085	0.072	0.084	0.096	0.085	0.080	0.122	0.108
n5-02	Motor Acceleration Time	s	0.085	0.072	0.084	0.096	0.085	0.080	0.122	0.108
n8-49	d-Axis Current for High Efficiency Control (for PM Motors) (OLV/PM)	%	-9.5	-10.1	-6.0	-9.3	-10.7	-13.2	-15.7	-11.5

<1> Default setting value varies depending on parameter o2-04, Drive Model Selection.

Table B.21 200 V, 1450 r/min Type Yaskawa SSR1 Series IPM Motor

No.	Name	Unit	Default Settings							
E5-01	Motor Code Selection (for PM Motors)	–	1313	1314	1315	1332	1333	1335	1336	1338
	Voltage Class	V	200	200	200	400	400	400	400	400
	Rated Power	kW	37	45	55	0.4	0.75	1.5	2.2	3.7
	Rated Speed	r/min	1450	1450	1450	1450	1450	1450	1450	1450
E5-02	Motor Rated Power (for PM Motors)	kW	37.00	45.00	55.00	0.4	0.75	1.5	2.2	3.7
E5-03	Motor Rated Current (for PM Motors)	A	126.0	153.1	186.5	0.94	1.56	2.81	4.27	6.98
E5-04	Number of Motor Poles (for PM Motors)	–	6	6	6	6	6	6	6	6
E5-05	Motor Stator Resistance (r1) (for PM Motors)	Ω	0.023	0.015	0.012	12.760	7.421	4.825	2.656	1.353
E5-06	Motor d-Axis Inductance (Ld) (for PM Motors)	mH	1.48	1.04	0.87	128.60	85.11	58.87	46.42	31.73
E5-07	Motor q-Axis Inductance (Lq) (for PM Motors)	mH	1.70	1.31	1.10	166.96	113.19	80.59	60.32	40.45
E5-09	Motor Induction Voltage Constant 1 (Ke) (for PM Motors)	mVs /rad	369.6	351.6	374.7	528.6	544.2	568.5	572.8	562.9
E5-24	Motor Induction Voltage Constant 2 (Ke) (for PM Motors)	mV/ (r/min)	0.0	0.0	0.0	0.0	0.0	0.0	0.0	0.0
E1-04	Maximum Output Frequency	r/min (Hz)	1450 (72.5)	1450 (72.5)	1450 (72.5)	1450 (72.5)	1450 (72.5)	1450 (72.5)	1450 (72.5)	1450 (72.5)
E1-05	Maximum Voltage	V	190.0	190.0	190.0	380.0	380.0	380.0	380.0	380.0
E1-06	Base Frequency	r/min (Hz)	1450 (72.5)	1450 (72.5)	1450 (72.5)	1450 (72.5)	1450 (72.5)	1450 (72.5)	1450 (72.5)	1450 (72.5)
E1-09	Minimum Output Frequency	r/min (Hz)	72 (3.6)	72 (3.6)	72 (3.6)	72 (3.6)	72 (3.6)	72 (3.6)	72 (3.6)	72 (3.6)
C5-17	Motor Inertia	kgm^2	0.259	0.312	0.42	0.0017	0.0023	0.0043	0.0083	0.0136
L3-24 <1>	Motor Acceleration Time for Inertia Calculations	s	0.161	0.160	0.175	0.098	0.071	0.066	0.087	0.085
n5-02	Motor Acceleration Time	s	0.161	0.160	0.175	0.098	0.071	0.066	0.087	0.085
n8-49	d-Axis Current for High Efficiency Control (for PM Motors) (OLV/PM)	%	-7.0	-11.8	-10.2	-6.6	-9.2	-13.5	-12.1	-13.7

<1> Default setting value varies depending on parameter o2-04, Drive Model Selection.

Table B.22 400 V, 1450 r/min Type Yaskawa SSR1 Series IPM Motor

No.	Name	Unit	Default Settings							
E5-01	Motor Code Selection (for PM Motors)	–	133A	133B	133D	133E	133F	1340	1342	1343
	Voltage Class	V	400	400	400	400	400	400	400	400
	Rated Power	kW	5.5	7.5	11	15	18	22	30	37
	Rated Speed	r/min	1450	1450	1450	1450	1450	1450	1450	1450
E5-02	Motor Rated Power (for PM Motors)	kW	5.5	7.5	11.0	15	18.50	22.00	30.00	37.00
E5-03	Motor Rated Current (for PM Motors)	A	10.21	13.85	19.5	27.4	32.9	37.6	52.5	63.2
E5-04	Number of Motor Poles (for PM Motors)	–	6	6	6	6	6	6	6	6
E5-05	Motor Stator Resistance (r1) (for PM Motors)	Ω	0.999	0.713	0.393	0.295	0.223	0.164	0.137	0.093
E5-06	Motor d-Axis Inductance (Ld) (for PM Motors)	mH	26.20	27.06	15.51	12.65	9.87	7.90	7.01	5.93
E5-07	Motor q-Axis Inductance (Lq) (for PM Motors)	mH	30.94	33.45	19.63	15.87	12.40	10.38	8.68	6.79
E5-09	Motor Induction Voltage Constant 1 (Ke) (for PM Motors)	mVs /rad	587.6	670.1	612.7	624.6	610.4	655.4	708.4	739.2
E5-24	Motor Induction Voltage Constant 2 (Ke) (for PM Motors)	mV/ (r/min)	0.0	0.0	0.0	0.0	0.0	0.0	0.0	0.0
E1-04	Maximum Output Frequency	r/min (Hz)	1450 (72.5)	1450 (72.5)	1450 (72.5)	1450 (72.5)	1450 (72.5)	1450 (72.5)	1450 (72.5)	1450 (72.5)
E1-05	Maximum Voltage	V	380.0	380.0	380.0	380.0	380.0	380.0	380.0	380.0
E1-06	Base Frequency	r/min (Hz)	1450 (72.5)	1450 (72.5)	1450 (72.5)	1450 (72.5)	1450 (72.5)	1450 (72.5)	1450 (72.5)	1450 (72.5)
E1-09	Minimum Output Frequency	r/min (Hz)	72 (3.6)	72 (3.6)	72 (3.6)	72 (3.6)	72 (3.6)	72 (3.6)	72 (3.6)	72 (3.6)
C5-17	Motor Inertia	kgm^2	0.017	0.027	0.046	0.055	0.064	0.116	0.140	0.259
L3-24 <1>	Motor Acceleration Time for Inertia Calculations	s	0.072	0.084	0.096	0.085	0.080	0.122	0.108	0.161
n5-02	Motor Acceleration Time	s	0.072	0.084	0.096	0.085	0.080	0.122	0.108	0.161
n8-49	d-Axis Current for High Efficiency Control (for PM Motors) (OLV/PM)	%	-10.1	-12.2	-15.5	-15.1	-16.0	-15.7	-11.5	-6.8

<1> Default setting value varies depending on parameter o2-04, Drive Model Selection.

Table B.23 400 V, 1450 r/min Type Yaskawa SSR1 Series IPM Motor

No.	Name	Unit	Default Settings							
E5-01	Motor Code Selection (for PM Motors)	–	1344	1345	1346	1347	1348	1349	1402	1403
	Voltage Class	V	400	400	400	400	400	400	200	200
	Rated Power	kW	45	55	75	90	110	132	0.4	0.75
	Rated Speed	r/min	1450	1450	1450	1450	1450	1450	1150	1150
E5-02	Motor Rated Power (for PM Motors)	kW	45.00	55.00	75.00	90.00	110.00	132.00	0.4	0.75
E5-03	Motor Rated Current (for PM Motors)	A	76.4	96.1	124.0	153.1	186.5	226.0	1.88	3.02
E5-04	Number of Motor Poles (for PM Motors)	–	6	6	6	6	6	6	6	6
E5-05	Motor Stator Resistance (r1) (for PM Motors)	Ω	0.059	0.048	0.028	0.024	0.015	0.011	4.832	2.704
E5-06	Motor d-Axis Inductance (Ld) (for PM Motors)	mH	4.17	3.11	2.32	2.20	1.45	1.23	48.68	32.31
E5-07	Motor q-Axis Inductance (Lq) (for PM Motors)	mH	5.22	4.55	2.97	3.23	1.88	1.67	63.21	40.24

No.	Name	Unit	Default Settings							
E5-09	Motor Induction Voltage Constant 1 (Ke) (for PM Motors)	mVs /rad	703.0	747.1	639.3	708.0	640.7	677.0	320.4	327.1
E5-24	Motor Induction Voltage Constant 2 (Ke) (for PM Motors)	mV/ (r/min)	0.0	0.0	0.0	0.0	0.0	0.0	0.0	0.0
E1-04	Maximum Output Frequency	r/min (Hz)	1450 (72.5)	1450 (72.5)	1450 (72.5)	1450 (72.5)	1450 (72.5)	1450 (72.5)	1150 (57.5)	1150 (57.5)
E1-05	Maximum Voltage	V	380.0	380.0	380.0	380.0	380.0	380.0	190.0	190.0
E1-06	Base Frequency	r/min (Hz)	1450 (72.5)	1450 (72.5)	1450 (72.5)	1450 (72.5)	1450 (72.5)	1450 (72.5)	1150 (57.5)	1150 (57.5)
E1-09	Minimum Output Frequency	r/min (Hz)	72 (3.6)	72 (3.6)	72 (3.6)	72 (3.6)	72 (3.6)	72 (3.6)	58 (2.9)	58 (2.9)
C5-17	Motor Inertia	kgm^2	0.312	0.42	0.56	0.83	0.96	1.61	0.0017	0.0023
L3-24 <1>	Motor Acceleration Time for Inertia Calculations	s	0.160	0.175	0.171	0.213	0.201	0.281	0.062	0.044
n5-02	Motor Acceleration Time	s	0.160	0.175	0.171	0.213	0.201	0.281	0.062	0.044
n8-49	d-Axis Current for High Efficiency Control (for PM Motors) (OLV/PM)	%	-11.5	-14.8	-15.8	-19.6	-14.9	-15.1	-8.8	-9.9

<1> Default setting value varies depending on parameter o2-04, Drive Model Selection.

Table B.24 200 V, 1150 r/min Type Yaskawa SSR1 Series IPM Motor

No.	Name	Unit	Default Settings							
E5-01	Motor Code Selection (for PM Motors)	–	1405	1406	1408	140A	140B	140D	140E	140F
	Voltage Class	V	200	200	200	200	200	200	200	200
	Rated Power	kW	1.5	2.2	3.7	5.5	7.5	11.0	15	18.00
	Rated Speed	r/min	1150	1150	1150	1150	1150	1150	1150	1150
E5-02	Motor Rated Power (for PM Motors)	kW	1.5	2.2	3.7	5.5	7.5	11	15	18.5
E5-03	Motor Rated Current (for PM Motors)	A	6.00	8.85	14.27	20.21	26.67	39.9	55.6	63.5
E5-04	Number of Motor Poles (for PM Motors)	–	6	6	6	6	6	6	6	6
E5-05	Motor Stator Resistance (r1) (for PM Motors)	Ω	1.114	0.511	0.412	0.303	0.165	0.113	0.084	0.066
E5-06	Motor d-Axis Inductance (Ld) (for PM Motors)	mH	19.22	12.15	7.94	11.13	6.59	4.96	3.83	3.33
E5-07	Motor q-Axis Inductance (Lq) (for PM Motors)	mH	24.38	15.35	11.86	14.06	8.55	6.12	4.65	4.5
E5-09	Motor Induction Voltage Constant 1 (Ke) (for PM Motors)	mVs /rad	364.4	344.4	357.5	430.8	391.5	384.4	372.1	421.3
E5-24	Motor Induction Voltage Constant 2 (Ke) (for PM Motors)	mV/ (r/min)	0.0	0.0	0.0	0.0	0.0	0.0	0.0	0.0
E1-04	Maximum Output Frequency	r/min (Hz)	1150 (57.5)	1150 (57.5)	1150 (57.5)	1150 (57.5)	1150 (57.5)	1150 (57.5)	1150 (57.5)	1150 (57.5)
E1-05	Maximum Voltage	V	190.0	190.0	190.0	190.0	190.0	190.0	190.0	190.0
E1-06	Base Frequency	r/min (Hz)	1150 (57.5)	1150 (57.5)	1150 (57.5)	1150 (57.5)	1150 (57.5)	1150 (57.5)	1150 (57.5)	1150 (57.5)
E1-09	Minimum Output Frequency	r/min (Hz)	58 (2.9)	58 (2.9)	58 (2.9)	58 (2.9)	58 (2.9)	58 (2.9)	58 (2.9)	58 (2.9)
C5-17	Motor Inertia	kgm^2	0.0083	0.0136	0.0171	0.027	0.046	0.055	0.064	0.116
L3-24 <1>	Motor Acceleration Time for Inertia Calculations	s	0.080	0.090	0.067	0.072	0.088	0.073	0.062	0.091
n5-02	Motor Acceleration Time	s	0.080	0.090	0.067	0.072	0.088	0.073	0.062	0.091
n8-49	d-Axis Current for High Efficiency Control (for PM Motors) (OLV/PM)	%	-9.3	-10.0	-17.7	-12.3	-15.3	-13.9	-14.4	-17.9

<1> Default setting value varies depending on parameter o2-04, Drive Model Selection.

Table B.25 200 V, 1150 r/min Type Yaskawa SSR1 Series IPM Motor

No.	Name	Unit	Default Settings							
E5-01	Motor Code Selection (for PM Motors)	–	1410	1412	1413	1414	1432	1433	1435	1436
	Voltage Class	V	200	200	200	200	400	400	400	400
	Rated Power	kW	22.00	30.00	37.00	45.00	0.4	0.75	1.5	2.2
	Rated Speed	r/min	1150	1150	1150	1150	1150	1150	1150	1150
E5-02	Motor Rated Power (for PM Motors)	kW	22	30	37	45	0.4	0.75	1.5	2.2
E5-03	Motor Rated Current (for PM Motors)	A	74.4	104.2	129.6	154.2	0.94	1.51	3.00	4.43
E5-04	Number of Motor Poles (for PM Motors)	–	6	6	6	6	6	6	6	6
E5-05	Motor Stator Resistance (r1) (for PM Motors)	Ω	0.048	0.035	0.023	0.016	19.320	10.800	4.456	2.044
E5-06	Motor d-Axis Inductance (Ld) (for PM Motors)	mH	2.38	2.04	1.53	1.16	194.70	129.20	76.88	48.60
E5-07	Motor q-Axis Inductance (Lq) (for PM Motors)	mH	3.15	2.86	2.27	1.54	252.84	160.90	97.52	61.40
E5-09	Motor Induction Voltage Constant 1 (Ke) (for PM Motors)	mVs /rad	410.9	436.1	428.8	433.3	640.9	654.1	728.8	688.9
E5-24	Motor Induction Voltage Constant 2 (Ke) (for PM Motors)	mV/ (r/min)	0.0	0.0	0.0	0.0	0.0	0.0	0.0	0.0
E1-04	Maximum Output Frequency	r/min (Hz)	1150 (57.5)	1150 (57.5)	1150 (57.5)	1150 (57.5)	1150 (57.5)	1150 (57.5)	1150 (57.5)	1150 (57.5)
E1-05	Maximum Voltage	V	190.0	190.0	190.0	190.0	380.0	380.0	380.0	380.0
E1-06	Base Frequency	r/min (Hz)	1150 (57.5)	1150 (57.5)	1150 (57.5)	1150 (57.5)	1150 (57.5)	1150 (57.5)	1150 (57.5)	1150 (57.5)
E1-09	Minimum Output Frequency	r/min (Hz)	58 (2.9)	58 (2.9)	58 (2.9)	58 (2.9)	58 (2.9)	58 (2.9)	58 (2.9)	58 (2.9)
C5-17	Motor Inertia	kgm^2	0.14	0.259	0.312	0.418	0.0017	0.0023	0.0083	0.0136
L3-24 <1>	Motor Acceleration Time for Inertia Calculations	s	0.092	0.125	0.122	0.135	0.062	0.044	0.080	0.090
n5-02	Motor Acceleration Time	s	0.092	0.125	0.122	0.135	0.062	0.044	0.080	0.090
n8-49	d-Axis Current for High Efficiency Control (for PM Motors) (OLV/PM)	%	-15.9	-17.9	-20.1	-13.7	-8.8	-9.9	-9.3	-10.0

<1> Default setting value varies depending on parameter o2-04, Drive Model Selection.

Table B.26 400 V, 1150 r/min Type Yaskawa SSR1 Series IPM Motor

No.	Name	Unit	Default Settings							
E5-01	Motor Code Selection (for PM Motors)	–	1438	143A	143B	143D	143E	143F	1440	1442
	Voltage Class	V	400	400	400	400	400	400	400	400
	Rated Power	kW	3.7	5.5	7.5	11	15	18	22	30
	Rated Speed	r/min	1150	1150	1150	1150	1150	1150	1150	1150
E5-02	Motor Rated Power (for PM Motors)	kW	3.7	5.5	7.5	11.0	15	18.50	22.00	30.00
E5-03	Motor Rated Current (for PM Motors)	A	7.08	10.10	13.33	19.9	27.8	31.8	37.2	52.1
E5-04	Number of Motor Poles (for PM Motors)	–	6	6	6	6	6	6	6	6
E5-05	Motor Stator Resistance (r1) (for PM Motors)	Ω	1.483	1.215	0.660	0.443	0.331	0.264	0.192	0.140
E5-06	Motor d-Axis Inductance (Ld) (for PM Motors)	mH	37.58	44.54	26.36	19.10	15.09	13.32	9.52	8.16
E5-07	Motor q-Axis Inductance (Lq) (for PM Motors)	mH	47.65	56.26	34.20	24.67	18.56	18.00	12.60	11.40
E5-09	Motor Induction Voltage Constant 1 (Ke) (for PM Motors)	mVs /rad	702.0	861.5	783.0	762.2	749.6	842.7	821.8	872.3
E5-24	Motor Induction Voltage Constant 2 (Ke) (for PM Motors)	mV/ (r/min)	0.0	0.0	0.0	0.0	0.0	0.0	0.0	0.0

No.	Name	Unit	Default Settings							
E1-04	Maximum Output Frequency	r/min (Hz)	1150 (57.5)	1150 (57.5)	1150 (57.5)	1150 (57.5)	1150 (57.5)	1150 (57.5)	1150 (57.5)	1150 (57.5)
E1-05	Maximum Voltage	V	380.0	380.0	380.0	380.0	380.0	380.0	380.0	380.0
E1-06	Base Frequency	r/min (Hz)	1150 (57.5)	1150 (57.5)	1150 (57.5)	1150 (57.5)	1150 (57.5)	1150 (57.5)	1150 (57.5)	1150 (57.5)
E1-09	Minimum Output Frequency	r/min (Hz)	58 (2.9)	58 (2.9)	58 (2.9)	58 (2.9)	58 (2.9)	58 (2.9)	58 (2.9)	58 (2.9)
C5-17	Motor Inertia	kgm^2	0.0171	0.027	0.046	0.055	0.064	0.116	0.140	0.259
L3-24 <1>	Motor Acceleration Time for Inertia Calculations	s	0.067	0.072	0.088	0.073	0.062	0.091	0.092	0.125
n5-02	Motor Acceleration Time	s	0.067	0.072	0.088	0.073	0.062	0.091	0.092	0.125
n8-49	d-Axis Current for High Efficiency Control (for PM Motors) (OLV/PM)	%	-12.8	-12.3	-15.3	-16.7	-14.9	-17.9	-15.9	-17.7

<1> Default setting value varies depending on parameter o2-04, Drive Model Selection.

Table B.27 400 V, 1150 r/min Type Yaskawa SSR1 Series IPM Motor

No.	Name	Unit	Default Settings					
E5-01	Motor Code Selection (for PM Motors)	–	1443	1444	1445	1446	1447	1448
	Voltage Class	V	400	400	400	400	400	400
	Rated Power	kW	37	45	55	75	90	110
	Rated Speed	r/min	1150	1150	1150	1150	1150	1150
E5-02	Motor Rated Power (for PM Motors)	kW	37.00	45.00	55.00	75.00	90.00	110.00
E5-03	Motor Rated Current (for PM Motors)	A	64.8	76.6	92.0	127.1	150.5	185.4
E5-04	Number of Motor Poles (for PM Motors)	–	6	6	6	6	6	6
E5-05	Motor Stator Resistance (r1) (for PM Motors)	Ω	0.093	0.063	0.051	0.033	0.027	0.015
E5-06	Motor d-Axis Inductance (Ld) (for PM Motors)	mH	6.13	4.63	3.96	3.03	2.60	1.89
E5-07	Motor q-Axis Inductance (Lq) (for PM Motors)	mH	9.10	6.15	5.00	5.14	3.28	2.33
E5-09	Motor Induction Voltage Constant 1 (Ke) (for PM Motors)	mVs /rad	857.7	866.6	854.0	823.1	853.4	829.2
E5-24	Motor Induction Voltage Constant 2 (Ke) (for PM Motors)	mV/ (r/min)	0.0	0.0	0.0	0.0	0.0	0.0
E1-04	Maximum Output Frequency	r/min (Hz)	1150 (57.5)	1150 (57.5)	1150 (57.5)	1150 (57.5)	1150 (57.5)	1150 (57.5)
E1-05	Maximum Voltage	V	380.0	380.0	380.0	380.0	380.0	380.0
E1-06	Base Frequency	r/min (Hz)	1150 (57.5)	1150 (57.5)	1150 (57.5)	1150 (57.5)	1150 (57.5)	1150 (57.5)
E1-09	Minimum Output Frequency	r/min (Hz)	58 (2.9)	58 (2.9)	58 (2.9)	58 (2.9)	58 (2.9)	58 (2.9)
C5-17	Motor Inertia	kgm^2	0.312	0.418	0.56	0.83	0.96	1.61
L3-24 <1>	Motor Acceleration Time for Inertia Calculations	s	0.122	0.135	0.147	0.161	0.154	0.212
n5-02	Motor Acceleration Time	s	0.122	0.135	0.147	0.161	0.154	0.212
n8-49	d-Axis Current for High Efficiency Control (for PM Motors) (OLV/PM)	%	-20.1	-13.8	-12.5	-28.8	-13.3	-11.6

<1> Default setting value varies depending on parameter o2-04, Drive Model Selection.

◆ Yaskawa SST4 Series IPM Motor (For Constant Torque)

Table B.28 200 V, 1750 r/min Type Yaskawa SST4 Series IPM Motor

No.	Name	Unit	Default Settings							
E5-01	Motor Code Selection (for PM Motors)	-	2202	2203	2205	2206	2208	220A	220B	220D
	Voltage Class	V	200	200	200	200	200	200	200	200
	Rated Power	kW	0.4	0.75	1.5	2.2	3.7	5.5	7.5	11
	Rated Speed	r/min	1750	1750	1750	1750	1750	1750	1750	1750
E5-02	Motor Rated Power (for PM Motors)	kW	0.4	0.75	1.5	2.2	3.7	5.5	7.5	11.0
E5-03	Motor Rated Current (for PM Motors)	A	1.77	3.54	6.56	8.96	14.79	20.94	29.58	41.1
E5-04	Number of Motor Poles (for PM Motors)	–	6	6	6	6	6	6	6	6
E5-05	Motor Stator Resistance (r1) (for PM Motors)	Ω	2.247	1.132	0.774	0.479	0.242	0.275	0.161	0.111
E5-06	Motor d-Axis Inductance (Ld) (for PM Motors)	mH	22.32	12.38	8.90	7.39	5.06	5.82	3.86	3.59
E5-07	Motor q-Axis Inductance (Lq) (for PM Motors)	mH	32.50	15.72	11.96	9.63	6.42	6.74	4.66	4.32
E5-09	Motor Induction Voltage Constant 1 (Ke) (for PM Motors)	mVs /rad	215.2	203.9	219.3	230.6	235.1	251.7	235.7	252.0
E5-24	Motor Induction Voltage Constant 2 (Ke) (for PM Motors)	mV/ (r/min)	0.0	0.0	0.0	0.0	0.0	0.0	0.0	0.0
E1-04	Maximum Output Frequency	r/min (Hz)	1750 (87.5)	1750 (87.5)	1750 (87.5)	1750 (87.5)	1750 (87.5)	1750 (87.5)	1750 (87.5)	1750 (87.5)
E1-05	Maximum Voltage	V	190.0	190.0	190.0	190.0	190.0	190.0	190.0	190.0
E1-06	Base Frequency	r/min (Hz)	1750 (87.5)	1750 (87.5)	1750 (87.5)	1750 (87.5)	1750 (87.5)	1750 (87.5)	1750 (87.5)	1750 (87.5)
E1-09	Minimum Output Frequency	r/min (Hz)	88 (4.4)	88 (4.4)	88 (4.4)	88 (4.4)	88 (4.4)	88 (4.4)	88 (4.4)	88 (4.4)
C5-17	Motor Inertia	kgm^2	0.0016	0.0022	0.0042	0.0081	0.0133	0.013	0.017	0.027
L3-24 <1>	Motor Acceleration Time for Inertia Calculations	s	0.134	0.099	0.094	0.124	0.121	0.081	0.075	0.082
n5-02	Motor Acceleration Time	s	0.134	0.099	0.094	0.124	0.121	0.081	0.075	0.082
n8-49	d-Axis Current for High Efficiency Control (for PM Motors) (OLV/PM)	%	-9.3	-6.4	-10.0	-9.9	-9.7	-8.4	-11.5	-13.1

<1> Default setting value varies depending on parameter o2-04, Drive Model Selection.

Table B.29 200 V, 1750 r/min Type Yaskawa SST4 Series IPM Motor

No.	Name	Unit	Default Settings							
E5-01	Motor Code Selection (for PM Motors)	-	220E	220F	2210	2212	2213	2214	2215	2216
	Voltage Class	V	200	200	200	200	200	200	200	200
	Rated Power	kW	15	18	22	30	37	45	55	75
	Rated Speed	r/min	1750	1750	1750	1750	1750	1750	1750	1750
E5-02	Motor Rated Power (for PM Motors)	kW	15	18.50	22.00	30.00	37.00	45.00	55.00	75.00
E5-03	Motor Rated Current (for PM Motors)	A	54.2	68.2	78.6	104.2	129.2	153.1	205.2	260.4
E5-04	Number of Motor Poles (for PM Motors)	–	6	6	6	6	6	6	6	6
E5-05	Motor Stator Resistance (r1) (for PM Motors)	Ω	0.071	0.049	0.040	0.030	0.020	0.013	0.009	0.006
E5-06	Motor d-Axis Inductance (Ld) (for PM Motors)	mH	2.67	1.98	1.69	1.31	0.88	0.77	0.55	0.40
E5-07	Motor q-Axis Inductance (Lq) (for PM Motors)	mH	3.1	2.41	2.12	1.61	1.14	1.04	0.69	0.50

No.	Name	Unit	Default Settings							
E5-09	Motor Induction Voltage Constant 1 (Ke) (for PM Motors)	mVs /rad	253.7	244.6	256.3	283.1	266.3	260	261.5	259.3
E5-24	Motor Induction Voltage Constant 2 (Ke) (for PM Motors)	mV/ (r/min)	0.0	0.0	0.0	0.0	0.0	0.0	0.0	0.0
E1-04	Maximum Output Frequency	r/min (Hz)	1750 (87.5)	1750 (87.5)	1750 (87.5)	1750 (87.5)	1750 (87.5)	1750 (87.5)	1750 (87.5)	1750 (87.5)
E1-05	Maximum Voltage	V	190.0	190.0	190.0	190.0	190.0	190.0	190.0	190.0
E1-06	Base Frequency	r/min (Hz)	1750 (87.5)	1750 (87.5)	1750 (87.5)	1750 (87.5)	1750 (87.5)	1750 (87.5)	1750 (87.5)	1750 (87.5)
E1-09	Minimum Output Frequency	r/min (Hz)	88 (4.4)	88 (4.4)	88 (4.4)	88 (4.4)	88 (4.4)	88 (4.4)	88 (4.4)	88 (4.4)
C5-17	Motor Inertia	kgm^2	0.044	0.054	0.063	0.113	0.137	0.252	0.30	0.41
L3-24 <1>	Motor Acceleration Time for Inertia Calculations	s	0.099	0.098	0.096	0.127	0.124	0.188	0.186	0.184
n5-02	Motor Acceleration Time	s	0.099	0.098	0.096	0.127	0.124	0.188	0.186	0.184
n8-49	d-Axis Current for High Efficiency Control (for PM Motors) (OLV/PM)	%	-10.9	-14.3	-15.1	-11.3	-14.1	-18.8	-11.4	-12.2

<1> Default setting value varies depending on parameter o2-04, Drive Model Selection.

Table B.30 400 V, 1750 r/min Type Yaskawa SST4 Series IPM Motor

No.	Name	Unit	Default Settings							
E5-01	Motor Code Selection (for PM Motors)	-	2232	2233	2235	2236	2238	223A	223B	223D
	Voltage Class	V	400	400	400	400	400	400	400	400
	Rated Power	kW	0.4	0.75	1.5	2.2	3.7	5.5	7.5	11
	Rated Speed	r/min	1750	1750	1750	1750	1750	1750	1750	1750
E5-02	Motor Rated Power (for PM Motors)	kW	0.4	0.75	1.5	2.2	3.7	5.5	7.5	11.0
E5-03	Motor Rated Current (for PM Motors)	A	0.92	1.77	3.33	4.48	7.50	10.42	14.27	20.5
E5-04	Number of Motor Poles (for PM Motors)	–	6	6	6	6	6	6	6	6
E5-05	Motor Stator Resistance (r1) (for PM Motors)	Ω	8.935	4.570	3.096	1.906	0.972	1.103	0.630	0.429
E5-06	Motor d-Axis Inductance (Ld) (for PM Motors)	mH	80.14	48.04	35.60	30.31	20.03	23.41	14.86	14.34
E5-07	Motor q-Axis Inductance (Lq) (for PM Motors)	mH	110.76	64.88	47.84	38.36	24.97	28.70	17.25	17.25
E5-09	Motor Induction Voltage Constant 1 (Ke) (for PM Motors)	mVs /rad	416.5	399.4	438.5	475.5	463.7	485.8	470.4	513.4
E5-24	Motor Induction Voltage Constant 2 (Ke) (for PM Motors)	mV/ (r/min)	0.0	0.0	0.0	0.0	0.0	0.0	0.0	0.0
E1-04	Maximum Output Frequency	r/min (Hz)	1750 (87.5)	1750 (87.5)	1750 (87.5)	1750 (87.5)	1750 (87.5)	1750 (87.5)	1750 (87.5)	1750 (87.5)
E1-05	Maximum Voltage	V	380.0	380.0	380.0	380.0	380.0	380.0	380.0	380.0
E1-06	Base Frequency	r/min (Hz)	1750 (87.5)	1750 (87.5)	1750 (87.5)	1750 (87.5)	1750 (87.5)	1750 (87.5)	1750 (87.5)	1750 (87.5)
E1-09	Minimum Output Frequency	r/min (Hz)	88 (4.4)	88 (4.4)	88 (4.4)	88 (4.4)	88 (4.4)	88 (4.4)	88 (4.4)	88 (4.4)
C5-17	Motor Inertia	kgm^2	0.0016	0.0022	0.0042	0.0081	0.0133	0.013	0.017	0.027
L3-24 <1>	Motor Acceleration Time for Inertia Calculations	s	0.134	0.099	0.094	0.124	0.121	0.081	0.075	0.082
n5-02	Motor Acceleration Time	s	0.134	0.099	0.094	0.124	0.121	0.081	0.075	0.082
n8-49	d-Axis Current for High Efficiency Control (for PM Motors) (OLV/PM)	%	-7.5	-8.5	-9.8	-8.2	-9.1	-13.1	-9.2	-12.4

<1> Default setting value varies depending on parameter o2-04, Drive Model Selection.

Table B.31 400 V, 1750 r/min Type Yaskawa SST4 Series IPM Motor

No.	Name	Unit	Default Settings							
E5-01	Motor Code Selection (for PM Motors)	-	223E	223F	2240	2242	2243	2244	2245	2246
	Voltage Class	V	400	400	400	400	400	400	400	400
	Rated Power	kW	15	18	22	30	37	45	55	75
	Rated Speed	r/min	1750	1750	1750	1750	1750	1750	1750	1750
E5-02	Motor Rated Power (for PM Motors)	kW	15	18.50	22.00	30.00	37.00	45.00	55.00	75.00
E5-03	Motor Rated Current (for PM Motors)	A	26.4	34.2	38.8	52.2	65.4	77.6	99.3	130.2
E5-04	Number of Motor Poles (for PM Motors)	–	6	6	6	6	6	6	6	6
E5-05	Motor Stator Resistance (r1) (for PM Motors)	Ω	0.275	0.196	0.160	0.120	0.077	0.052	0.036	0.023
E5-06	Motor d-Axis Inductance (Ld) (for PM Motors)	mH	9.99	7.92	6.82	5.24	3.57	2.98	1.59	1.59
E5-07	Motor q-Axis Inductance (Lq) (for PM Motors)	mH	12.37	9.64	8.51	6.44	4.65	3.75	2.78	1.97
E5-09	Motor Induction Voltage Constant 1 (Ke) (for PM Motors)	mVs /rad	505.3	489.2	509.5	566.2	531.6	530.6	515.2	515.2
E5-24	Motor Induction Voltage Constant 2 (Ke) (for PM Motors)	mV/ (r/min)	0.0	0.0	0.0	0.0	0.0	0.0	0.0	0.0
E1-04	Maximum Output Frequency	r/min (Hz)	1750 (87.5)	1750 (87.5)	1750 (87.5)	1750 (87.5)	1750 (87.5)	1750 (87.5)	1750 (87.5)	1750 (87.5)
E1-05	Maximum Voltage	V	380.0	380.0	380.0	380.0	380.0	380.0	380.0	380.0
E1-06	Base Frequency	r/min (Hz)	1750 (87.5)	1750 (87.5)	1750 (87.5)	1750 (87.5)	1750 (87.5)	1750 (87.5)	1750 (87.5)	1750 (87.5)
E1-09	Minimum Output Frequency	r/min (Hz)	88 (4.4)	88 (4.4)	88 (4.4)	88 (4.4)	88 (4.4)	88 (4.4)	88 (4.4)	88 (4.4)
C5-17	Motor Inertia	kgm^2	0.044	0.054	0.063	0.113	0.137	0.252	0.30	0.41
L3-24 <1>	Motor Acceleration Time for Inertia Calculations	s	0.099	0.098	0.096	0.127	0.124	0.188	0.186	0.184
n5-02	Motor Acceleration Time	s	0.099	0.098	0.096	0.127	0.124	0.188	0.186	0.184
n8-49	d-Axis Current for High Efficiency Control (for PM Motors) (OLV/PM)	%	-15.1	-14.3	-15.3	-11.3	-14.5	-13.2	-22.6	-11.9

<1> Default setting value varies depending on parameter o2-04, Drive Model Selection.

Table B.32 400 V, 1750 r/min Type Yaskawa SST4 Series IPM Motor

No.	Name	Unit	Default Settings						
E5-01	Motor Code Selection (for PM Motors)	-	2247	2248	2249	224A	224C	224D	224E
	Voltage Class	V	400	400	400	400	400	400	400
	Rated Power	kW	90.00	110	132	160	200	220	300
	Rated Speed	r/min	1750	1750	1750	1750	1750	1750	1750
E5-02	Motor Rated Power (for PM Motors)	kW	90.00	110.00	132.00	160.00	200.00	250.00	300.00
E5-03	Motor Rated Current (for PM Motors)	A	153.1	184.4	229.2	269.8	346.9	421.9	520.8
E5-04	Number of Motor Poles (for PM Motors)	–	6	6	6	6	6	6	6
E5-05	Motor Stator Resistance (r1) (for PM Motors)	Ω	0.019	0.017	0.012	0.008	0.005	0.004	0.002
E5-06	Motor d-Axis Inductance (Ld) (for PM Motors)	mH	1.51	1.43	1.13	0.96	0.65	0.67	0.40
E5-07	Motor q-Axis Inductance (Lq) (for PM Motors)	mH	1.76	1.92	1.54	1.26	0.88	0.74	0.52

No.	Name	Unit	Default Settings						
E5-09	Motor Induction Voltage Constant 1 (Ke) (for PM Motors)	mVs /rad	538.3	590.9	548.2	603.9	556.8	593.1	495.4
E5-24	Motor Induction Voltage Constant 2 (Ke) (for PM Motors)	mV/ (r/min)	0.0	0.0	0.0	0.0	0.0	0.0	0.0
E1-04	Maximum Output Frequency	r/min (Hz)	1750 (87.5)	1750 (87.5)	1750 (87.5)	1750 (87.5)	1750 (87.5)	1750 (87.5)	1750 (87.5)
E1-05	Maximum Voltage	V	380.0	380.0	380.0	380.0	380.0	380.0	380.0
E1-06	Base Frequency	r/min (Hz)	1750 (87.5)	1750 (87.5)	1750 (87.5)	1750 (87.5)	1750 (87.5)	1750 (87.5)	1750 (87.5)
E1-09	Minimum Output Frequency	r/min (Hz)	88 (4.4)	88 (4.4)	88 (4.4)	88 (4.4)	88 (4.4)	88 (4.4)	88 (4.4)
C5-17	Motor Inertia	kgm^2	0.55	0.82	0.96	1.60	1.95	2.82	3.70
L3-24 <1>	Motor Acceleration Time for Inertia Calculations	s	0.205	0.250	0.244	0.336	0.327	0.379	0.414
n5-02	Motor Acceleration Time	s	0.205	0.250	0.244	0.336	0.327	0.379	0.414
n8-49	d-Axis Current for High Efficiency Control (for PM Motors) (OLV/PM)	%	-8.6	-14.8	-17.5	-12.5	-14.7	-5.1	-16.3

<1> Default setting value varies depending on parameter o2-04, Drive Model Selection.

Table B.33 200 V, 1450 r/min Type Yaskawa SST4 Series IPM Motor

No.	Name	Unit	Default Settings							
E5-01	Motor Code Selection (for PM Motors)	–	2302	2303	2305	2306	2308	230A	230B	230D
	Voltage Class	V	200	200	200	200	200	200	200	200
	Rated Power	kW	0.4	0.75	1.5	2.2	3.7	5.5	7.5	11
	Rated Speed	r/min	1450	1450	1450	1450	1450	1450	1450	1450
E5-02	Motor Rated Power (for PM Motors)	kW	0.4	0.75	1.5	2.2	3.7	5.5	7.5	11.0
E5-03	Motor Rated Current (for PM Motors)	A	1.77	3.33	5.94	9.48	14.17	20.42	27.92	39.6
E5-04	Number of Motor Poles (for PM Motors)	–	6	6	6	6	6	6	6	6
E5-05	Motor Stator Resistance (r1) (for PM Motors)	Ω	3.154	1.835	0.681	0.308	0.405	0.278	0.180	0.098
E5-06	Motor d-Axis Inductance (Ld) (for PM Motors)	mH	28.46	19.46	10.00	6.88	8.15	5.77	6.32	3.34
E5-07	Motor q-Axis Inductance (Lq) (for PM Motors)	mH	39.29	25.89	15.20	9.25	10.76	8.60	8.80	4.61
E5-09	Motor Induction Voltage Constant 1 (Ke) (for PM Motors)	mVs /rad	268.8	256.9	271.9	260.2	286.8	314.9	300.8	292.3
E5-24	Motor Induction Voltage Constant 2 (Ke) (for PM Motors)	mV/ (r/min)	0.0	0.0	0.0	0.0	0.0	0.0	0.0	0.0
E1-04	Maximum Output Frequency	r/min (Hz)	1450 (72.5)	1450 (72.5)	1450 (72.5)	1450 (72.5)	1450 (72.5)	1450 (72.5)	1450 (72.5)	1450 (72.5)
E1-05	Maximum Voltage	V	190.0	190.0	190.0	190.0	190.0	190.0	190.0	190.0
E1-06	Base Frequency	r/min (Hz)	1450 (72.5)	1450 (72.5)	1450 (72.5)	1450 (72.5)	1450 (72.5)	1450 (72.5)	1450 (72.5)	1450 (72.5)
E1-09	Minimum Output Frequency	r/min (Hz)	72 (3.6)	72 (3.6)	72 (3.6)	72 (3.6)	72 (3.6)	72 (3.6)	72 (3.6)	72 (3.6)
C5-17	Motor Inertia	kgm^2	0.0016	0.0022	0.0081	0.0133	0.0133	0.017	0.027	0.044
L3-24 <1>	Motor Acceleration Time for Inertia Calculations	s	0.092	0.068	0.125	0.139	0.083	0.070	0.082	0.092
n5-02	Motor Acceleration Time	s	0.092	0.068	0.125	0.139	0.083	0.070	0.082	0.092
n8-49	d-Axis Current for High Efficiency Control (for PM Motors) (OLV/PM)	%	-7.5	-9.4	-13.9	-10.0	-15.0	-17.9	-22.7	-20.5

<1> Default setting value varies depending on parameter o2-04, Drive Model Selection.

Table B.34 200 V, 1450 r/min Type Yaskawa SST4 Series IPM Motor

No.	Name	Unit	Default Settings							
E5-01	Motor Code Selection (for PM Motors)	_	230E	230F	2310	2312	2313	2314	2315	2316
	Voltage Class	V	200	200	200	200	200	200	200	200
	Rated Power	kW	15	18	22	30	37	45	55	75
	Rated Speed	r/min	1450	1450	1450	1450	1450	1450	1450	1450
E5-02	Motor Rated Power (for PM Motors)	kW	15.0	18.50	22.00	30.00	37.00	45.00	55.00	75.00
E5-03	Motor Rated Current (for PM Motors)	A	54.2	68.3	75.2	102.0	131.3	160.4	191.7	257.3
E5-04	Number of Motor Poles (for PM Motors)	–	6	6	6	6	6	6	6	6
E5-05	Motor Stator Resistance (r1) (for PM Motors)	Ω	0.073	0.055	0.048	0.034	0.023	0.016	0.012	0.007
E5-06	Motor d-Axis Inductance (Ld) (for PM Motors)	mH	2.94	2.23	2.08	1.67	1.39	0.94	0.82	0.56
E5-07	Motor q-Axis Inductance (Lq) (for PM Motors)	mH	3.65	2.85	2.66	2.04	1.73	1.22	1.06	0.76
E5-09	Motor Induction Voltage Constant 1 (Ke) (for PM Motors)	mVs /rad	305.1	297.6	355.8	355.4	324.0	302.4	337.2	323.4
E5-24	Motor Induction Voltage Constant 2 (Ke) (for PM Motors)	mV/ (r/min)	0.0	0.0	0.0	0.0	0.0	0.0	0.0	0.0
E1-04	Maximum Output Frequency	r/min (Hz)	1450 (72.5)	1450 (72.5)	1450 (72.5)	1450 (72.5)	1450 (72.5)	1450 (72.5)	1450 (72.5)	1450 (72.5)
E1-05	Maximum Voltage	V	190.0	190.0	190.0	190.0	190.0	190.0	190.0	190.0
E1-06	Base Frequency	r/min (Hz)	1450 (72.5)	1450 (72.5)	1450 (72.5)	1450 (72.5)	1450 (72.5)	1450 (72.5)	1450 (72.5)	1450 (72.5)
E1-09	Minimum Output Frequency	r/min (Hz)	72 (3.6)	72 (3.6)	72 (3.6)	72 (3.6)	72 (3.6)	72 (3.6)	72 (3.6)	72 (3.6)
C5-17	Motor Inertia	kgm^2	0.054	0.063	0.113	0.137	0.252	0.304	0.41	0.55
L3-24 <1>	Motor Acceleration Time for Inertia Calculations	s	0.083	0.079	0.118	0.105	0.157	0.156	0.172	0.169
n5-02	Motor Acceleration Time	s	0.083	0.079	0.118	0.105	0.157	0.156	0.172	0.169
n8-49	d-Axis Current for High Efficiency Control (for PM Motors) (OLV/PM)	%	-14.6	-16.4	-11.8	-10.5	-14.5	-17.4	-13.9	-17.5

<1> Default setting value varies depending on parameter o2-04, Drive Model Selection.

Table B.35 400 V, 1450 r/min Type Yaskawa SST4 Series IPM Motor

No.	Name	Unit	Default Settings							
E5-01	Motor Code Selection (for PM Motors)	-	2332	2333	2335	2336	2338	233A	233B	233D
	Voltage Class	V	400	400	400	400	400	400	400	400
	Rated Power	kW	0.4	0.75	1.5	2.2	3.7	5.5	7.5	11
	Rated Speed	r/min	1450	1450	1450	1450	1450	1450	1450	1450
E5-02	Motor Rated Power (for PM Motors)	kW	0.4	0.75	1.5	2.2	3.7	5.5	7.5	11.0
E5-03	Motor Rated Current (for PM Motors)	A	0.91	1.67	3.02	4.74	7.08	10.21	13.96	20.5
E5-04	Number of Motor Poles (for PM Motors)	–	6	6	6	6	6	6	6	6
E5-05	Motor Stator Resistance (r1) (for PM Motors)	Ω	12.616	7.340	2.724	1.232	1.509	1.112	0.720	0.393
E5-06	Motor d-Axis Inductance (Ld) (for PM Motors)	mH	113.84	77.84	40.00	27.52	31.73	23.09	25.28	13.36
E5-07	Motor q-Axis Inductance (Lq) (for PM Motors)	mH	157.16	103.56	60.80	37.00	40.88	34.39	35.20	18.44
E5-09	Motor Induction Voltage Constant 1 (Ke) (for PM Motors)	mVs /rad	490.8	513.8	543.7	520.3	580.8	602.7	601.5	584.6

No.	Name	Unit	Default Settings							
E5-24	Motor Induction Voltage Constant 2 (Ke) (for PM Motors)	mV/ (r/min)	0.0	0.0	0.0	0.0	0.0	0.0	0.0	0.0
E1-04	Maximum Output Frequency	r/min (Hz)	1450 (72.5)	1450 (72.5)	1450 (72.5)	1450 (72.5)	1450 (72.5)	1450 (72.5)	1450 (72.5)	1450 (72.5)
E1-05	Maximum Voltage	V	380.0	380.0	380.0	380.0	380.0	380.0	380.0	380.0
E1-06	Base Frequency	r/min (Hz)	1450 (72.5)	1450 (72.5)	1450 (72.5)	1450 (72.5)	1450 (72.5)	1450 (72.5)	1450 (72.5)	1450 (72.5)
E1-09	Minimum Output Frequency	r/min (Hz)	72 (3.6)	72 (3.6)	72 (3.6)	72 (3.6)	72 (3.6)	72 (3.6)	72 (3.6)	72 (3.6)
C5-17	Motor Inertia	kgm^2	0.0016	0.0022	0.0081	0.0133	0.0133	0.017	0.027	0.044
L3-24 <1>	Motor Acceleration Time for Inertia Calculations	s	0.092	0.068	0.125	0.139	0.083	0.070	0.082	0.092
n5-02	Motor Acceleration Time	s	0.092	0.068	0.125	0.139	0.083	0.070	0.082	0.092
n8-49	d-Axis Current for High Efficiency Control (for PM Motors) (OLV/PM)	%	-9.5	-9.4	-13.7	-10.0	-12.9	-19.9	-22.8	-19.8

<1> Default setting value varies depending on parameter o2-04, Drive Model Selection.

Table B.36 400 V, 1450 r/min Type Yaskawa SST4 Series IPM Motor

No.	Name	Unit	Default Settings							
E5-01	Motor Code Selection (for PM Motors)	-	233E	233F	2340	2342	2343	2344	2345	2346
	Voltage Class	V	400	400	400	400	400	400	400	400
	Rated Power	kW	15	18	22	30	37	45	55	75
	Rated Speed	r/min	1450	1450	1450	1450	1450	1450	1450	1450
E5-02	Motor Rated Power (for PM Motors)	kW	15	18.50	22.00	30.00	37.00	45.00	55.00	75.00
E5-03	Motor Rated Current (for PM Motors)	A	27.1	34.2	37.6	50.9	65.4	80.2	96.1	129.2
E5-04	Number of Motor Poles (for PM Motors)	–	6	6	6	6	6	6	6	6
E5-05	Motor Stator Resistance (r1) (for PM Motors)	Ω	0.291	0.220	0.192	0.136	0.091	0.064	0.048	0.028
E5-06	Motor d-Axis Inductance (Ld) (for PM Motors)	mH	11.77	8.94	8.32	6.68	5.30	3.76	3.09	2.24
E5-07	Motor q-Axis Inductance (Lq) (for PM Motors)	mH	14.60	11.40	10.64	8.16	6.80	4.88	4.75	3.03
E5-09	Motor Induction Voltage Constant 1 (Ke) (for PM Motors)	mVs /rad	610.3	595.2	711.6	710.8	652.7	604.8	669.1	646.8
E5-24	Motor Induction Voltage Constant 2 (Ke) (for PM Motors)	mV/ (r/min)	0.0	0.0	0.0	0.0	0.0	0.0	0.0	0.0
E1-04	Maximum Output Frequency	r/min (Hz)	1450 (72.5)	1450 (72.5)	1450 (72.5)	1450 (72.5)	1450 (72.5)	1450 (72.5)	1450 (72.5)	1450 (72.5)
E1-05	Maximum Voltage	V	380.0	380.0	380.0	380.0	380.0	380.0	380.0	380.0
E1-06	Base Frequency	r/min (Hz)	1450 (72.5)	1450 (72.5)	1450 (72.5)	1450 (72.5)	1450 (72.5)	1450 (72.5)	1450 (72.5)	1450 (72.5)
E1-09	Minimum Output Frequency	r/min (Hz)	72 (3.6)	72 (3.6)	72 (3.6)	72 (3.6)	72 (3.6)	72 (3.6)	72 (3.6)	72 (3.6)
C5-17	Motor Inertia	kgm^2	0.054	0.063	0.113	0.137	0.252	0.304	0.41	0.55
L3-24 <1>	Motor Acceleration Time for Inertia Calculations	s	0.083	0.079	0.118	0.105	0.157	0.156	0.172	0.169
n5-02	Motor Acceleration Time	s	0.083	0.079	0.118	0.105	0.157	0.156	0.172	0.169
n8-49	d-Axis Current for High Efficiency Control (for PM Motors) (OLV/PM)	%	-14.5	-16.1	-11.8	-10.5	-15.6	-17.4	-21.7	-17.3

<1> Default setting value varies depending on parameter o2-04, Drive Model Selection.

Table B.37 400 V, 1450 r/min Type Yaskawa SST4 Series IPM Motor

No.	Name	Unit	Default Settings					
E5-01	Motor Code Selection (for PM Motors)	-	2347	2348	2349	234A	234C	234D
	Voltage Class	V	400	400	400	400	400	400
	Rated Power	kW	90	110	132	160	200	250
	Rated Speed	r/min	1450	1450	1450	1450	1450	1450
E5-02	Motor Rated Power (for PM Motors)	kW	90.00	110.00	132.00	160.00	200.00	250.00
E5-03	Motor Rated Current (for PM Motors)	A	153.1	191.7	226.0	268.8	331.3	422.9
E5-04	Number of Motor Poles (for PM Motors)	–	6	6	6	6	6	6
E5-05	Motor Stator Resistance (r1) (for PM Motors)	Ω	0.024	0.015	0.011	0.007	0.006	0.003
E5-06	Motor d-Axis Inductance (Ld) (for PM Motors)	mH	2.20	1.34	1.23	0.92	0.84	0.61
E5-07	Motor q-Axis Inductance (Lq) (for PM Motors)	mH	3.23	2.16	1.67	1.30	1.25	0.89
E5-09	Motor Induction Voltage Constant 1 (Ke) (for PM Motors)	mVs /rad	708.0	637.8	677.0	661.7	687.1	655.9
E5-24	Motor Induction Voltage Constant 2 (Ke) (for PM Motors)	mV/ (r/min)	0.0	0.0	0.0	0.0	0.0	0.0
E1-04	Maximum Output Frequency	r/min (Hz)	1450 (72.5)	1450 (72.5)	1450 (72.5)	1450 (72.5)	1450 (72.5)	1450 (72.5)
E1-05	Maximum Voltage	V	380.0	380.0	380.0	380.0	380.0	380.0
E1-06	Base Frequency	r/min (Hz)	1450 (72.5)	1450 (72.5)	1450 (72.5)	1450 (72.5)	1450 (72.5)	1450 (72.5)
E1-09	Minimum Output Frequency	r/min (Hz)	72 (3.6)	72 (3.6)	72 (3.6)	72 (3.6)	72 (3.6)	72 (3.6)
C5-17	Motor Inertia	kgm^2	0.82	0.96	1.60	1.95	2.82	3.70
L3-24 <1>	Motor Acceleration Time for Inertia Calculations	s	0.210	0.201	0.279	0.281	0.325	0.341
n5-02	Motor Acceleration Time	s	0.210	0.201	0.279	0.281	0.325	0.341
n8-49	d-Axis Current for High Efficiency Control (for PM Motors) (OLV/PM)	%	-19.6	-24.1	-15.1	-17.0	-19.8	-19.3

<1> Default setting value varies depending on parameter o2-04, Drive Model Selection.

Table B.38 200 V, 1150 r/min Type Yaskawa SST4 Series IPM Motor

No.	Name	Unit	Default Settings							
E5-01	Motor Code Selection (for PM Motors)	–	2402	2403	2405	2406	2408	240A	240B	240D
	Voltage Class	V	200	200	200	200	200	200	200	200
	Rated Power	kW	0.4	0.75	1.5	2.2	3.7	5.5	7.5	11
	Rated Speed	r/min	1150	1150	1150	1150	1150	1150	1150	1150
E5-02	Motor Rated Power (for PM Motors)	kW	0.4	0.75	1.5	2.2	3.7	5.5	7.5	11.0
E5-03	Motor Rated Current (for PM Motors)	A	1.77	3.44	5.94	9.17	14.79	20.21	27.40	39.0
E5-04	Number of Motor Poles (for PM Motors)	–	6	6	6	6	6	6	6	6
E5-05	Motor Stator Resistance (r1) (for PM Motors)	Ω	2.680	1.520	1.071	0.542	0.362	0.295	0.162	0.115
E5-06	Motor d-Axis Inductance (Ld) (for PM Motors)	mH	30.55	15.29	17.48	11.98	8.60	9.54	5.31	4.44
E5-07	Motor q-Axis Inductance (Lq) (for PM Motors)	mH	42.71	24.28	22.51	15.51	10.69	13.84	8.26	5.68
E5-09	Motor Induction Voltage Constant 1 (Ke) (for PM Motors)	mVs /rad	313.1	313.1	345.3	342.9	363.8	384.3	379.9	370.2
E5-24	Motor Induction Voltage Constant 2 (Ke) (for PM Motors)	mV/ (r/min)	0.0	0.0	0.0	0.0	0.0	0.0	0.0	0.0
E1-04	Maximum Output Frequency	r/min (Hz)	1150 (57.5)	1150 (57.5)	1150 (57.5)	1150 (57.5)	1150 (57.5)	1150 (57.5)	1150 (57.5)	1150 (57.5)
E1-05	Maximum Voltage	V	190.0	190.0	190.0	190.0	190.0	190.0	190.0	190.0

No.	Name	Unit	Default Settings							
E1-06	Base Frequency	r/min (Hz)	1150 (57.5)	1150 (57.5)	1150 (57.5)	1150 (57.5)	1150 (57.5)	1150 (57.5)	1150 (57.5)	1150 (57.5)
E1-09	Minimum Output Frequency	r/min (Hz)	58 (2.9)	58 (2.9)	58 (2.9)	58 (2.9)	58 (2.9)	58 (2.9)	58 (2.9)	58 (2.9)
C5-17	Motor Inertia	kgm^2	0.0022	0.0042	0.0081	0.0133	0.0168	0.027	0.044	0.054
L3-24 <1>	Motor Acceleration Time for Inertia Calculations	s	0.080	0.081	0.078	0.088	0.066	0.070	0.085	0.071
n5-02	Motor Acceleration Time	s	0.080	0.081	0.078	0.088	0.066	0.070	0.085	0.071
n8-49	d-Axis Current for High Efficiency Control (for PM Motors) (OLV/PM)	%	-8.4	-11.0	-10.7	-10.7	-9.4	-22.5	-22.2	-16.7

<1> Default setting value varies depending on parameter o2-04, Drive Model Selection.

Table B.39 200 V, 1150 r/min Type Yaskawa SST4 Series IPM Motor

No.	Name	Unit	Default Settings							
E5-01	Motor Code Selection (for PM Motors)	_	240E	240F	2410	2412	2413	2414	2415	2416
	Voltage Class	V	200	200	200	200	200	200	200	200
	Rated Power	kW	15	18	22	30	37	45	55	75
	Rated Speed	r/min	1150	1150	1150	1150	1150	1150	1150	1150
E5-02	Motor Rated Power (for PM Motors)	kW	15	18.50	22.00	30.00	37.00	45.00	55.00	75.00
E5-03	Motor Rated Current (for PM Motors)	A	55.9	65.4	77.0	103.5	126.0	153.1	188.5	260.4
E5-04	Number of Motor Poles (for PM Motors)	–	6	6	6	6	6	6	6	6
E5-05	Motor Stator Resistance (r1) (for PM Motors)	Ω	0.083	0.065	0.052	0.035	0.026	0.019	0.013	0.009
E5-06	Motor d-Axis Inductance (Ld) (for PM Motors)	mH	3.50	2.92	2.55	2.03	1.59	1.24	0.98	0.70
E5-07	Motor q-Axis Inductance (Lq) (for PM Motors)	mH	4.23	3.79	3.22	2.46	1.92	1.64	1.37	0.97
E5-09	Motor Induction Voltage Constant 1 (Ke) (for PM Motors)	mVs /rad	364.5	404.5	445.1	444.4	447.3	470.8	422.4	418.3
E5-24	Motor Induction Voltage Constant 2 (Ke) (for PM Motors)	mV/ (r/min)	0.0	0.0	0.0	0.0	0.0	0.0	0.0	0.0
E1-04	Maximum Output Frequency	r/min (Hz)	1150 (57.5)	1150 (57.5)	1150 (57.5)	1150 (57.5)	1150 (57.5)	1150 (57.5)	1150 (57.5)	1150 (57.5)
E1-05	Maximum Voltage	V	190.0	190.0	190.0	190.0	190.0	190.0	190.0	190.0
E1-06	Base Frequency	r/min (Hz)	1150 (57.5)	1150 (57.5)	1150 (57.5)	1150 (57.5)	1150 (57.5)	1150 (57.5)	1150 (57.5)	1150 (57.5)
E1-09	Minimum Output Frequency	r/min (Hz)	58 (2.9)	58 (2.9)	58 (2.9)	58 (2.9)	58 (2.9)	58 (2.9)	58 (2.9)	58 (2.9)
C5-17	Motor Inertia	kgm^2	0.063	0.113	0.137	0.252	0.304	0.410	0.55	0.82
L3-24 <1>	Motor Acceleration Time for Inertia Calculations	s	0.061	0.089	0.090	0.122	0.119	0.132	0.145	0.159
n5-02	Motor Acceleration Time	s	0.061	0.089	0.090	0.122	0.119	0.132	0.145	0.159
n8-49	d-Axis Current for High Efficiency Control (for PM Motors) (OLV/PM)	%	-13.7	-15.2	-10.9	-9.8	-9.3	-11.5	-17.7	-17.1

<1> Default setting value varies depending on parameter o2-04, Drive Model Selection.

Table B.40 400 V, 1150 r/min Type Yaskawa SST4 Series IPM Motor

No.	Name	Unit	Default Settings						
E5-01	Motor Code Selection (for PM Motors)	_	2432	2433	2435	2436	2438	243A	243B
	Voltage Class	V	400	400	400	400	400	400	400
	Rated Power	kW	0.4	0.75	1.5	2.2	3.7	5.5	7.5
	Rated Speed	r/min	1150	1150	1150	1150	1150	1150	1150
E5-02	Motor Rated Power (for PM Motors)	kW	0.4	0.75	1.5	2.2	3.7	5.5	7.5
E5-03	Motor Rated Current (for PM Motors)	A	0.89	1.72	3.02	4.58	7.40	10.21	13.75

No.	Name	Unit	Default Settings						
E5-04	Number of Motor Poles (for PM Motors)	–	6	6	6	6	6	6	6
E5-05	Motor Stator Resistance (r1) (for PM Motors)	Ω	10.720	6.080	4.336	2.143	1.428	1.199	0.648
E5-06	Motor d-Axis Inductance (Ld) (for PM Motors)	mH	122.20	61.16	70.24	46.20	33.87	41.67	21.24
E5-07	Motor q-Axis Inductance (Lq) (for PM Motors)	mH	170.80	97.12	90.04	60.28	42.98	69.15	33.04
E5-09	Motor Induction Voltage Constant 1 (Ke) (for PM Motors)	mVs /rad	626.1	626.1	703.1	727.6	699.0	861.5	759.7
E5-24	Motor Induction Voltage Constant 2 (Ke) (for PM Motors)	mV/ (r/min)	0.0	0.0	0.0	0.0	0.0	0.0	0.0
E1-04	Maximum Output Frequency	r/min (Hz)	1150 (57.5)	1150 (57.5)	1150 (57.5)	1150 (57.5)	1150 (57.5)	1150 (57.5)	1150 (57.5)
E1-05	Maximum Voltage	V	380.0	380.0	380.0	380.0	380.0	380.0	380.0
E1-06	Base Frequency	r/min (Hz)	1150 (57.5)	1150 (57.5)	1150 (57.5)	1150 (57.5)	1150 (57.5)	1150 (57.5)	1150 (57.5)
E1-09	Minimum Output Frequency	r/min (Hz)	58 (2.9)	58 (2.9)	58 (2.9)	58 (2.9)	58 (2.9)	58 (2.9)	58 (2.9)
C5-17	Motor Inertia	kgm^2	0.0022	0.0042	0.0081	0.0133	0.0168	0.027	0.044
L3-24 <1>	Motor Acceleration Time for Inertia Calculations	s	0.080	0.081	0.078	0.088	0.066	0.070	0.085
n5-02	Motor Acceleration Time	s	0.080	0.081	0.078	0.088	0.066	0.070	0.085
n8-49	d-Axis Current for High Efficiency Control (for PM Motors) (OLV/PM)	%	-8.4	-11.0	-9.9	-9.0	-11.4	-23.2	-22.1

<1> Default setting value varies depending on parameter o2-04, Drive Model Selection.

Table B.41 400 V, 1150 r/min Type Yaskawa SST4 Series IPM Motor

No.	Name	Unit	Default Settings						
E5-01	Motor Code Selection (for PM Motors)	_	243D	243E	243F	2440	2442	2443	2444
	Voltage Class	V	400	400	400	400	400	400	400
	Rated Power	kW	11	15	18	22	30	37	45
	Rated Speed	r/min	1150	1150	1150	1150	1150	1150	1150
E5-02	Motor Rated Power (for PM Motors)	kW	11.0	15	18.50	22.00	30.00	37.00	45.00
E5-03	Motor Rated Current (for PM Motors)	A	19.5	27.7	32.7	39.2	51.8	63.0	76.6
E5-04	Number of Motor Poles (for PM Motors)	–	6	6	6	6	6	6	6
E5-05	Motor Stator Resistance (r1) (for PM Motors)	Ω	0.460	0.325	0.260	0.209	0.140	0.106	0.076
E5-06	Motor d-Axis Inductance (Ld) (for PM Motors)	mH	17.76	12.83	11.68	10.09	8.12	6.43	4.96
E5-07	Motor q-Axis Inductance (Lq) (for PM Motors)	mH	22.72	17.19	15.16	16.25	9.84	7.71	6.56
E5-09	Motor Induction Voltage Constant 1 (Ke) (for PM Motors)	mVs /rad	740.4	716.6	809.1	786.2	888.8	857.7	941.6
E5-24	Motor Induction Voltage Constant 2 (Ke) (for PM Motors)	mV/ (r/min)	0.0	0.0	0.0	0.0	0.0	0.0	0.0
E1-04	Maximum Output Frequency	r/min (Hz)	1150 (57.5)	1150 (57.5)	1150 (57.5)	1150 (57.5)	1150 (57.5)	1150 (57.5)	1150 (57.5)
E1-05	Maximum Voltage	V	380.0	380.0	380.0	380.0	380.0	380.0	380.0
E1-06	Base Frequency	r/min (Hz)	1150 (57.5)	1150 (57.5)	1150 (57.5)	1150 (57.5)	1150 (57.5)	1150 (57.5)	1150 (57.5)
E1-09	Minimum Output Frequency	r/min (Hz)	58 (2.9)	58 (2.9)	58 (2.9)	58 (2.9)	58 (2.9)	58 (2.9)	58 (2.9)
C5-17	Motor Inertia	kgm^2	0.054	0.063	0.113	0.137	0.252	0.304	0.410
L3-24 <1>	Motor Acceleration Time for Inertia Calculations	s	0.071	0.061	0.089	0.090	0.122	0.119	0.132

No.	Name	Unit	Default Settings						
n5-02	Motor Acceleration Time	s	0.071	0.061	0.089	0.090	0.122	0.119	0.132
n8-49	d-Axis Current for High Efficiency Control (for PM Motors) (OLV/PM)	%	-16.7	-20.2	-15.2	-27.7	-9.8	-10.2	-11.5

<1> Default setting value varies depending on parameter o2-04, Drive Model Selection.

Table B.42 400 V, 1150 r/min Type Yaskawa SST4 Series IPM Motor

No.	Name	Unit	Default Settings						
E5-01	Motor Code Selection (for PM Motors)	_	2445	2446	2447	2448	2449	244A	244C
	Voltage Class	V	400	400	400	400	400	400	400
	Rated Power	kW	55	75	90k	110	132	160	200
	Rated Speed	r/min	1150	1150	1150	1150	1150	1150	1150
E5-02	Motor Rated Power (for PM Motors)	kW	55.00	75.00	90.00	110.00	132.00	160.00	200.00
E5-03	Motor Rated Current (for PM Motors)	A	93.1	128.1	153.1	186.5	221.9	269.8	336.5
E5-04	Number of Motor Poles (for PM Motors)	–	6	6	6	6	6	6	6
E5-05	Motor Stator Resistance (r1) (for PM Motors)	Ω	0.051	0.032	0.026	0.015	0.012	0.009	0.007
E5-06	Motor d-Axis Inductance (Ld) (for PM Motors)	mH	3.99	2.97	2.44	1.87	1.49	1.41	1.22
E5-07	Motor q-Axis Inductance (Lq) (for PM Motors)	mH	5.39	3.90	3.23	2.46	2.08	1.88	1.51
E5-09	Motor Induction Voltage Constant 1 (Ke) (for PM Motors)	mVs /rad	853.8	829.6	835.6	833.4	848.6	889.1	915.0
E5-24	Motor Induction Voltage Constant 2 (Ke) (for PM Motors)	mV/ (r/min)	0.0	0.0	0.0	0.0	0.0	0.0	0.0
E1-04	Maximum Output Frequency	r/min (Hz)	1150 (57.5)	1150 (57.5)	1150 (57.5)	1150 (57.5)	1150 (57.5)	1150 (57.5)	1150 (57.5)
E1-05	Maximum Voltage	V	380.0	380.0	380.0	380.0	380.0	380.0	380.0
E1-06	Base Frequency	r/min (Hz)	1150 (57.5)	1150 (57.5)	1150 (57.5)	1150 (57.5)	1150 (57.5)	1150 (57.5)	1150 (57.5)
E1-09	Minimum Output Frequency	r/min (Hz)	58 (2.9)	58 (2.9)	58 (2.9)	58 (2.9)	58 (2.9)	58 (2.9)	58 (2.9)
C5-17	Motor Inertia	kgm^2	0.55	0.82	0.96	1.60	1.95	2.82	3.70
L3-24 <1>	Motor Acceleration Time for Inertia Calculations	s	0.145	0.159	0.155	0.211	0.214	0.256	0.268
n5-02	Motor Acceleration Time	s	0.145	0.159	0.155	0.211	0.214	0.256	0.268
n8-49	d-Axis Current for High Efficiency Control (for PM Motors) (OLV/PM)	%	-16.0	-15.7	-15.7	-14.7	-16.5	-14.1	-10.4

<1> Default setting value varies depending on parameter o2-04, Drive Model Selection.

This Page Intentionally Blank

Appendix: C

MEMOBUS/Modbus Communications

C.1 MEMOBUS/MODBUS CONFIGURATION....702
C.2 COMMUNICATION SPECIFICATIONS....703
C.3 CONNECTING TO A NETWORK....704
C.4 MEMOBUS/MODBUS SETUP PARAMETERS....707
C.5 DRIVE OPERATIONS BY MEMOBUS/MODBUS....710
C.6 COMMUNICATIONS TIMING....711
C.7 MESSAGE FORMAT....712
C.8 MESSAGE EXAMPLES....714
C.9 MEMOBUS/MODBUS DATA TABLE....716
C.10 ENTER COMMAND....732
C.11 COMMUNICATION ERRORS....733
C.12 SELF-DIAGNOSTICS....734

C.1 MEMOBUS/Modbus Configuration

Drives can be controlled from a PLC or other master device via serial communications using the MEMOBUS/Modbus protocol.

MEMOBUS/Modbus communications can be configured using one master (PLC) and up to 255 slaves. The drive has slave functionality only, and serial communication is normally initiated from the master and responded to by the slaves.

The master communicates with the specified slave drive. The address or node for each slave must be set prior so the master can communicate with the slave at that address. A slave that receives a command from the master will perform the specified function and send a response back to the master.

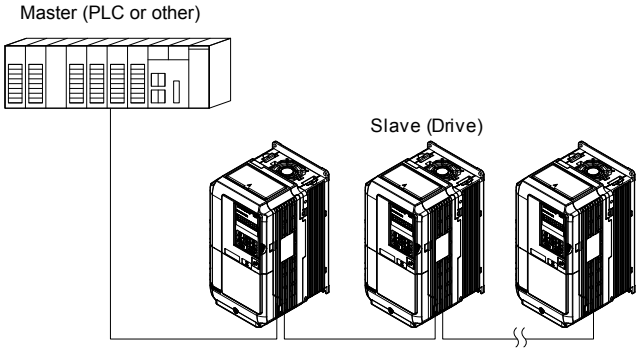

Figure C.1 Connecting Multiple Drives to a PLC

C.2 Communication Specifications

MEMOBUS/Modbus specifications appear in *Table C.1*:

Table C.1 MEMOBUS/Modbus Communications Specifications

Item	Specifications	
Interface	RS-422, RS-485	
Communications Cycle	Asynchronous (Start-stop synchronization)	
Communication Parameters	Communication Speeds Available	1.2; 2.4; 4.8; 9.6; 19.2; 38.4; 57.6; 76.8; 115.2 kbps
	Data length	8-bit (fixed)
	Parity	Select even, odd, or none
	Stop bit	1-bit (fixed)
Protocol	MEMOBUS/Modbus (using RTU mode only)	
Maximum Number of Slaves	31 drives (RS-485)	

C.3 Connecting to a Network

This section explains how to connect the drive to a MEMOBUS/Modbus network and the network termination required for a connection.

◆ Network Cable Connection

Follow the instructions below to connect the drive to a MEMOBUS/Modbus network.

1. With the power shut off, connect the communications cable to the drive and the master. Use terminals TB5 for MEMOBUS/Modbus.

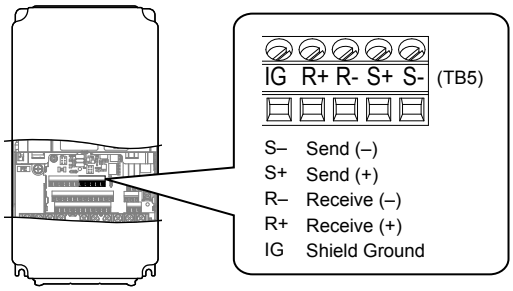

Figure C.2 Serial Communications Cable Connection Terminals (TB5)

Note: Separate the communications cables from the main circuit cables and other wiring and power cables. Use shielded cables for the communications cables, and properly shielded clamps to prevent problems with noise. When using RS-485 communications, connect S+ to R+, and S- to R- as shown in the diagram below.

2. Check or set the termination resistor selection at all slaves. Use the description in ***Network Termination*** on page ***706*** for slaves that are A1000 drives.
3. Switch the power on.
4. Set the parameters needed for serial communications (H5-01 through H5-12) using the digital operator.
5. Shut the power off and wait until the display on the digital operator goes out completely.
6. Turn the power back on.
7. The drive is now ready to begin communicating with the master.

◆ Wiring Diagram for Multiple Connections

Figure C.3 and *Figure C.4* explain the wiring diagrams for multiple connections using MEMOBUS/Modbus communication.

■ RS-485 Interface

Note: The isolated ground (IG) connection is optional but strongly recommended to improve network immunity to electrical interference.

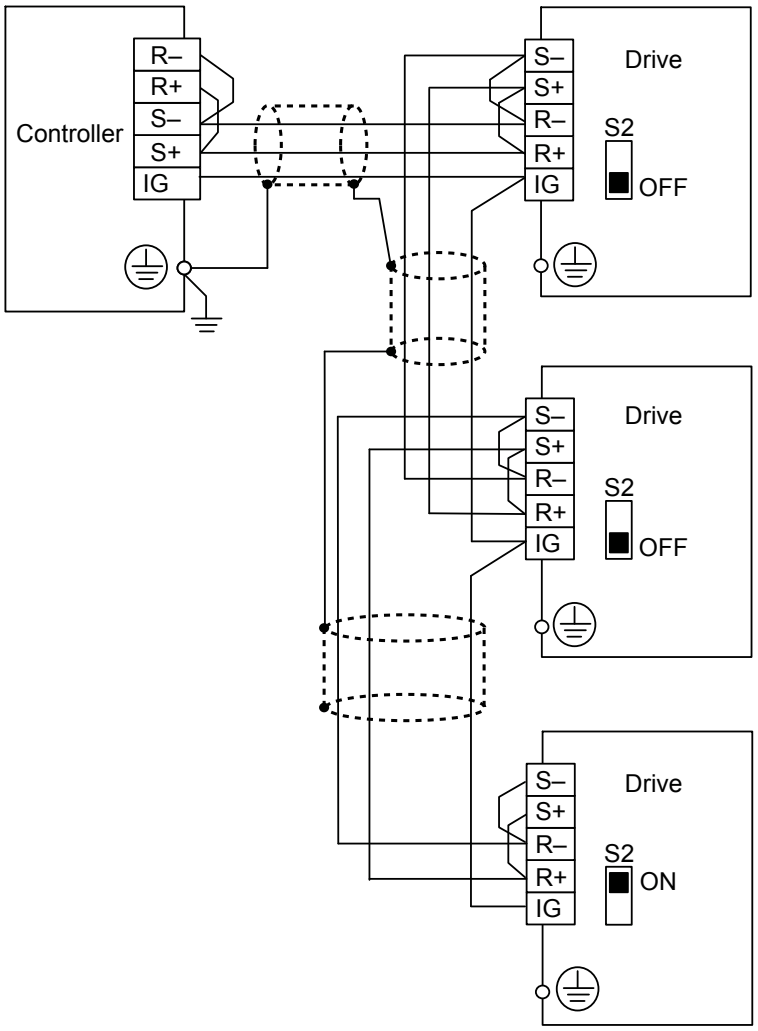

Figure C.3 RS-485 Interface

Note:
1. Set DIP switch S2 to the ON position on the drive located at the end of the network. Set DIP switch S2 to the OFF positions on all other slave devices.
2. Set H5-07 to 1 when using the RS-485 interface.

■ RS-422 Interface

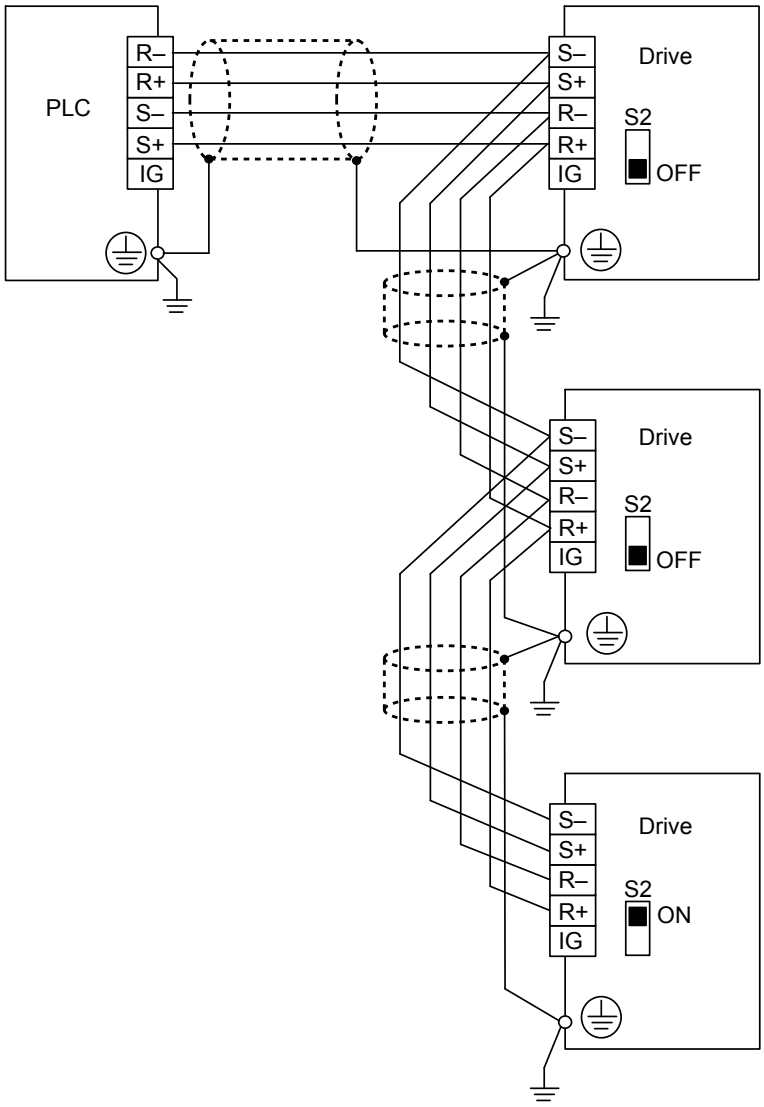

Figure C.4 RS-422 Interface

Note:
1. Set DIP switch S2 to the ON position on the drive located at the end of the network. Set DIP switch S2 to the OFF positions on all other slave devices.
2. Set H5-07 to 1 when using the RS-422 interface in a multi-drop circuit.
   Set H5-07 to 0 when using the RS-422 interface in a point-to-point circuit.

◆ Network Termination

The two ends of the MEMOBUS/Modbus network line have to be terminated. The drive has a built in termination resistor that can be enabled or disabled using DIP switch S2. If a drive is located at the end of a network line, enable the termination resistor by setting DIP switch S2 to the ON position. Disable the termination resistor on all slaves that are not located at the network line end.

C.4 MEMOBUS/Modbus Setup Parameters

◆ MEMOBUS/Modbus Serial Communication

Changes to MEMOBUS/Modbus communications settings become effective after restarting the drive.

■ H5-01: Drive Slave Address

Sets the drive slave address used for communications.

Note: Cycle power for the setting to take effect.

No.	Name	Setting Range	Default
H5-01	Drive Slave Address	0 to FF <1>	1F

<1> If the address is set to 0, no response will be provided during communications.

Each slave drive must be assigned a unique slave address for serial communications to work. Setting H5-01 to any value besides 0 assigns the drive its address in the network. Slave addresses do not need to be assigned in sequential order, but no two drives may share the same address.

■ H5-02: Communication Speed Selection

Sets the MEMOBUS/Modbus communications speed.

Note: Cycle the power after changing this parameter to enable the new setting.

No.	Name	Setting Range	Default
H5-02	Communication Speed Selection	0 to 8	3

Setting 0: 1200 bps
Setting 1: 2400 bps
Setting 2: 4800 bps
Setting 3: 9600 bps
Setting 4: 19200 bps
Setting 5: 38400 bps
Setting 6: 57600 bps
Setting 7: 76800 bps
Setting 8: 115200 bps

■ H5-03: Communication Parity Selection

Sets the parity used for communications.

Note: Cycle power for the setting to take effect.

No.	Name	Setting Range	Default
H5-03	Communication Parity Selection	0 to 2	0

Setting 0: No parity
Setting 1: Even parity
Setting 2: Odd parity

■ H5-04: Stopping Method after Communication Error

Selects the stopping method after a communications error (CE) has occurred.

No.	Name	Setting Range	Default
H5-04	Stopping Method after CE	0 to 3	3

Setting 0: Ramp to stop (uses the deceleration time currently enabled)
Setting 1: Coast to stop
Setting 2: Fast Stop
Setting 3: Alarm only (continue operation)

■ H5-05: Communication Fault Detection Selection

Enables or disables the CE detection for communications.

No.	Name	Setting Range	Default
H5-05	Communication Fault Detection Selection	0 or 1	1

Setting 0: Disabled
No communication error detection. The drive continues operation.

Setting 1: Enabled
If the drive does not receive data from the master for longer than the time set to H5-09, then a CE fault will be triggered and the drive will operate as determined by parameter H5-04.

■ H5-06: Drive Transmit Wait Time

Sets the time the drive waits after receiving data from a master until responding data.

Note: Cycle power for the setting to take effect.

No.	Name	Setting Range	Default
H5-06	Drive Transmit Wait Time	5 to 65 ms	5 ms

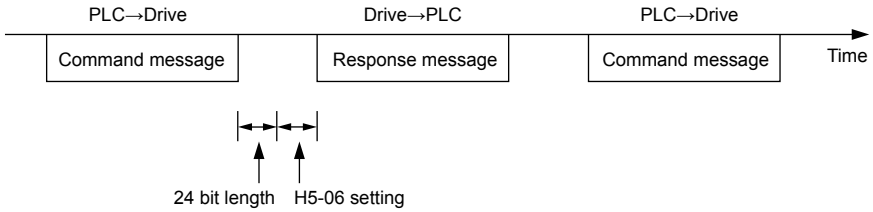

Figure C.5 Drive Transmit Wait Time Setting

■ H5-07: RTS Control Selection

Enables or disables RTS control.

Note: Cycle power for the setting to take effect.

No.	Name	Setting Range	Default
H5-07	RTS Control Selection	0 or 1	1

Setting 0: Disabled. RTS is always on.
Use this setting with point-to-point RS-422 communications.

Setting 1: Enabled. RTS switches while sending.
Use this setting with RS-485 communications or when using multi-drop RS-422 communications.

■ H5-09: Communications Fault Detection Time

Sets the time the communications must be lost before the drive triggers a CE fault.

No.	Name	Setting Range	Default
H5-09	Communications Fault Detection Time	0.0 to 10.0 s	2.0 s

■ H5-10: Unit Selection for MEMOBUS/Modbus Register 0025H

Sets the unit for the output voltage monitor value in MEMOBUS/Modbus register 0025H.

No.	Name	Setting Range	Default
H5-10	Unit Selection for MEMOBUS/Modbus Register 0025H	0 or 1	0

Setting 0: 0.1 V units

Setting 1: 1 V units

■ H5-11: Communications Enter Function Selection

Selects whether an Enter command is necessary to change parameter values via MEMOBUS/Modbus communications. ***Refer to Enter Command on page 732***.

No.	Name	Setting Range	Default
H5-11	Communications Enter Function Selection	0 or 1	0

Setting 0: Parameter changes applied and saved in drive on Enter command input

Parameter changes are applied on Enter command input and saved in EEPROM in the drive if 0900H in the Enter command is set to 0. Input the Enter command only after completion of all of the parameter changes.

Setting 1: Parameter changes applied immediately and saved in drive on Enter command input

Parameter changes are applied as soon as they are made. The parameter changes are saved to EEPROM in the drive when an Enter command with 0900H set to 0 is input.

■ H5-12: Run Command Method Selection

Selects the type of sequence used when the Run command source is set to MEMOBUS/Modbus communications (b1-02, b1-16 = 2).

No.	Name	Setting Range	Default
H5-12	Run Command Method Selection	0 or 1	0

Setting 0: FWD/Stop, REV/Stop

Setting bit 0 of MEMOBUS/Modbus register 0001H will start and stop the drive in the forward direction. Setting bit 1 will start and stop the drive in reverse.

Setting 1: Run/Stop, FWD/REV

Setting bit 0 of MEMOBUS/Modbus register 0001H will start and stop the drive. Setting bit 1 changes the direction.

■ H5-17: Operation Selection when Unable to Write into EEPROM

Selects the operation to be carried out when attempting to write data into EEPROM by MEMOBUS/Modbus communications but writing into EEPROM is not enabled. There is normally no need to change this parameter from the default value.

No.	Name	Setting Range	Default
H5-17	Operation Selection when Unable to Write into EEPROM	0, 1	0

Setting 0: Cannot write into EEPROM

Setting 1: Write in RAM only

■ H5-18: Filter Time Constant for Motor Speed Monitoring

Sets the filter time constant for monitoring the motor speed from MEMOBUS/Modbus communications and communication options. Applicable MEMOBUS/Modbus registers are: 3EH, 3FH, 44H, ACH, and ADH

Note: This parameter is not available in models 4A0930 and 4A1200.

No.	Name	Setting Range	Default
H5-18	Filter Time Constant for Motor Speed Monitoring	0 to 100 ms	0 ms

C.5 Drive Operations by MEMOBUS/Modbus

The drive operations that can be performed by MEMOBUS/Modbus communication depend on drive parameter settings. This section explains the functions that can be used and related parameter settings.

◆ Observing the Drive Operation

PLCs can perform the following actions with MEMOBUS/Modbus communications:

- observe drive status and drive control terminal status
- read and write parameters (not H5-□□)
- reset faults
- set multi-function inputs

Note: Input settings from the input terminals (S1 to S8) and from MEMOBUS/Modbus communications are both linked by a logical OR operation.

◆ Controlling the Drive

Select an external reference and adjust the parameters in ***Table C.2*** accordingly to start and stop the drive or set the frequency reference using MEMOBUS/Modbus communications.

Table C.2 Setting Parameters for Drive Control from MEMOBUS/Modbus

Reference Source	Parameter	Name	Required Setting
External Reference 1	b1-01	Frequency Reference Selection 1	2
	b1-02	Run Command Selection 1	2
External Reference 2	b1-15	Frequency Reference Selection 2	2
	b1-16	Run Command Selection 2	2

Refer to b1-01: Frequency Reference Selection 1 on page 205 and ***Refer to b1-02: Run Command Selection 1 on page 206*** for details on external reference parameter selections. ***Refer to Setting 2: External Reference 1/2 Selection on page 300*** for instructions on selecting external references 1 and 2.

C.6 Communications Timing

To prevent a communications overrun in the slave drive, the master should wait a certain time between sending messages to the same drive. In the same way, the slave drive must wait before sending response messages to prevent an overrun in the master. This section explains the message timing.

◆ Command Messages from Master to Drive

The master must wait for a specified time between receiving a response and resending the same type of command to the same slave drive to prevent overrun and data loss. The minimum wait time depends on the command as shown in *Table C.3*.

Table C.3 Minimum Wait Time for Sending Messages

Command Type	Example	Minimum Wait Time
1	• Control command (Run, Stop) • Set inputs/outputs • Read monitors and parameter values	5 ms <1>
2	Write parameters	H5-06 = 0: 50 ms H5-06 = 1: 200 ms <1>
3	Save changes using an Enter command	200 ms to 2 s, depending on the number of parameters that were changed <1>
4	Enter with storage to drive EEPROM after initialization	5 s

<1> If the drive receives command type 1 data during the minimum wait time, it will perform the command and then respond. However, if it receives a command type 2 or 3 during that time, either a communication error will result or the command will be ignored.

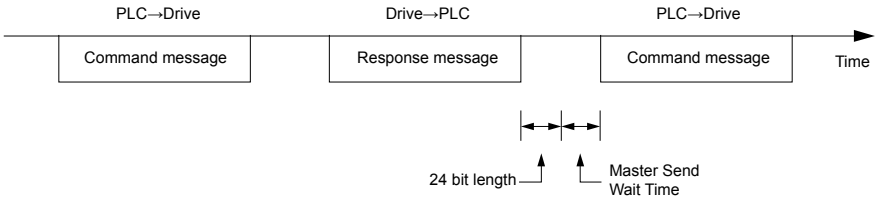

Figure C.6 Minimum Wait Time for Sending Messages

Set a timer in the master to check how long it takes for the slave drive(s) to respond to the master. If no response is received within a certain amount of time, the master should try resending the message.

◆ Response Messages from Drive to Master

If the drive receives a command from the master, it will process the data received and wait for the time set in H5-06 until it responds. Increase H5-06 if the drive response causes overrun in the master.

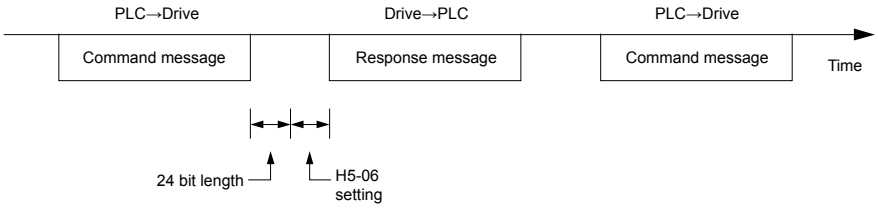

Figure C.7 Minimum Response Wait Time

C.7 Message Format

◆ Message Content

In MEMOBUS/Modbus communications, the master sends commands to the slave, and the slave responds. The message format is configured for both sending and receiving as shown below, and the length of data packets depends on the command (function) content.

SLAVE ADDRESS
FUNCTION CODE
DATA
ERROR CHECK

◆ Slave Address

The slave address in the message defines the note the message is sent to. Use addresses between 0 and FF (hex). If a message with slave address 0 is sent (broadcast), the command from the master will be received by all slaves. The slaves do not provide a response to a broadcast type message.

◆ Function Code

The three types of function codes are shown in the table below.

Function Code	Function Name	Data Length (bytes)			
		Command Message		Response Message	
		Minimum	Maximum	Minimum	Maximum
03H	Read MEMOBUS/Modbus registers	8	8	7	37
08H	Loopback test	8	8	8	8
10H	Write to multiple MEMOBUS/Modbus registers	11	41	8	8

◆ Data

Configure consecutive data by combining the MEMOBUS/Modbus register address (test code in case of a loopback test) and the data the register contains. The data length changes depending on the command details.

A drive MEMOBUS/Modbus register always has a data length of two bytes. Data written into drive registers must also always have a length of two bytes. Register data read out from the drive will always consist of two bytes.

◆ Error Check

The drive uses a CRC-16 (cyclic redundancy check, checksum method) for checking data validity. Use the procedure described below when calculating the CRC-16 checksum for command data or when verifying response data.

■ Command Data

When the drive receives data, it calculates the CRC-16 checksum from the data and compares it to the CRC-16 value received within the message. Both must match before a command is processed.

An initial value of FFFFH (i.e., all 16 bits equal 1) must be used for CRC-16 calculations in the MEMOBUS/Modbus protocol.

Calculate the CRC-16 checksum using the following steps:

1. The starting value is FFFFH.
2. Perform an XOR operation of this value and the slave address.
3. Right shift the result.
4. When the overflow bit of the shift operation becomes 1, perform an XOR operation of the result from step 3 above and the fix value A001H.
5. Repeat steps 3 and 4 until eight shift operations have been performed.
6. After eight shift operations, perform an XOR operation with the result and the next data in the message (function code, register address, data). Continue with steps 3 to 5 until the last data has been processed.
7. The result of the last shift or XOR operation is the checksum.

The example in *Table C.4* shows the CRC-16 calculation of the slave address 02H and the function code 03H, yielding the result D140H.

Note: This example does not show the calculation for a complete MEMOBUS/Modbus command. Normally data would follow in the calculation.

Table C.4 CRC-16 Checksum Calculation Example

Description	Calculation	Overflow	Description	Calculation	Overflow
Initial Value (FFFFH)	1111 1111 1111 1111		Function Code 03H	0000 0000 0000 0011	
Address 02H	0000 0000 0000 0010		XOR w result	1000 0001 0011 1101	
XOR w initial value	1111 1111 1111 1101		Shift 1	0100 0000 1001 1110	1
Shift 1	0111 1111 1111 1110	1	XOR w A001H	1010 0000 0000 0001	
XOR w A001H	1010 0000 0000 0001		XOR result	1110 0000 1001 1111	
XOR result	1101 1111 1111 1111		Shift 2	0111 0000 0100 1111	1
Shift 2	0110 1111 1111 1111	1	XOR w A001H	1010 0000 0000 0001	
XOR w A001H	1010 0000 0000 0001		XOR result	1101 0000 0100 1110	
XOR result	1100 1111 1111 1110		Shift 3	0110 1000 0010 0111	0
Shift 3	0110 0111 1111 1111	0	Shift 4	0011 0100 0001 0011	1
Shift 4	0011 0011 1111 1111	1	XOR w A001H	1010 0000 0000 0001	
XOR w A001H	1010 0000 0000 0001		XOR result	1001 0100 0001 0010	
XOR result	1001 0011 1111 1110		Shift 5	0100 1010 0000 1001	0
Shift 5	0100 1001 1111 1111	0	Shift 6	0010 0101 0000 0100	1
Shift 6	0010 0100 1111 1111	1	XOR w A001H	1010 0000 0000 0001	
XOR w A001H	1010 0000 0000 0001		XOR result	1000 0101 0000 0101	
XOR result	1000 0100 1111 1110		Shift 7	0100 0010 1000 0010	1
Shift 7	0100 0010 0111 1111	0	XOR w A001H	1010 0000 0000 0001	
Shift 8	0010 0001 0011 1111	1	XOR result	1110 0010 1000 0011	
XOR w A001H	1010 0000 0000 0001		Shift 8	0111 0001 0100 0001	1
XOR result	1000 0001 0011 1110		XOR w A001H	1010 0000 0000 0001	
Perform operations with next data (function code)			XOR result	1101 0001 0100 0000	
			CRC-16	1101 0001 0100 0000	
				D 1 4 0 (Lower) (Upper)	
			Continue from here with next data.		

■ Response Data

Perform a CRC-16 calculation on the response message data as described above as a validation check. The result should match the CRC-16 checksum received within the response message.

C.8 Message Examples

Below are some examples of command and response messages.

◆ Reading Drive MEMOBUS/Modbus Register Contents

Using the function code 03H (Read), a maximum of 16 MEMOBUS/Modbus registers can be read out at a time.

The following table shows message examples when reading status signals, error details, data link status, and frequency references from the slave 2 drive.

Command Message			Response Message (normal)			Response Message (fault)		
Slave Address		02H	Slave Address		02H	Slave Address		02H
Function Code		03H	Function Code		03H	Function Code		83H
Starting No.	Upper	00H	Data Quantity		08H	Error Code		03H
	Lower	20H	1st storage register	Upper	00H	CRC-16	Upper	F1H
Data Quantity	Upper	00H		Lower	65H		Lower	31H
	Lower	04H	Next storage register	Upper	00H			
CRC-16	Upper	45H		Lower	00H			
	Lower	F0H	Next storage register	Upper	00H			
				Lower	00H			
			Next storage register	Upper	01H			
				Lower	F4H			
			CRC-16	Upper	AFH			
				Lower	82H			

◆ Loopback Test

Function code 08H performs a loopback test that returns a response message with exactly the same content as the command message. The response message can be used to check communications between the master and slave. User-defined test code and data values can also be set.

The following table shows a message example when performing a loopback test with the slave 1 drive.

Command Message			Response Message		
Slave Address		01H	Slave Address		01H
Function Code		08H	Function Code		08H
Test Code	Upper	00H	Test Code	Upper	00H
	Lower	00H		Lower	00H
Data	Upper	A5H	Data	Upper	A5H
	Lower	37H		Lower	37H
CRC-16	Upper	DAH	CRC-16	Upper	DAH
	Lower	8DH		Lower	8DH

◆ Writing to Multiple Registers

Function code 10H allows the user to write multiple drive MEMOBUS/Modbus registers with one message. This process works similar to reading registers, in that the address of the first register to be written and the data quantity are set in the command message. The data to be written must be consecutive so that the register addresses are in order, starting from the specified address in the command message. The data order must be high byte then lower byte.

The following table shows an example of a message where a forward operation has been set with a frequency reference of 60.00 Hz for the slave 1 drive.

If parameter values are changed using the Write command, an Enter command may be necessary to activate or save the data depending on the setting of H5-11. ***Refer to H5-11: Communications Enter Function Selection on page 709*** and ***Refer to Enter Command on page 732*** for detailed descriptions.

Command Message			Response Message (normal)			Response Message (fault)		
Slave Address		01H	Slave Address		01H	Slave Address		01H
Function Code		10H	Function Code		10H	Function Code		90H
Starting No.	Upper	00H	Starting No.	Upper	00H	Error Code		02H
	Lower	01H		Lower	01H	CRC-16	Upper	CDH
Data Quantity	Upper	00H	Data Quantity	Upper	00H		Lower	C1H
	Lower	02H		Lower	02H			
Number of Bytes		04H	CRC-16	Upper	10H			
Starting Data	Upper	00H		Lower	08H			
	Lower	01H						
Next Data	Upper	17H						
	Lower	70H						
CRC-16	Upper	63H						
	Lower	39H						

Note: Double the number of the data quantity for the number of bytes in the command message.

C.9 MEMOBUS/Modbus Data Table

The tables below list all MEMOBUS/Modbus data.

The MEMOBUS register hex addresses for parameters are listed beginning on page 559.

◆ Command Data

It is possible to both read and write command data.

Note: Bits that are not used should be set to 0. Refrain from writing to reserved registers.

Table C.5 Command Register Data

Register No.	Contents	
0000H	Reserved	
0001H	Operation Commands and Multi-function Inputs	
	bit 0	H5-12 = 0: Forward Run Command (0 = Stop, 1 = Forward Run) H5-12 = 1: Run Command (0 = Stop, 1 = Run)
	bit 1	H5-12 = 0: Reverse Run Command (0 = Stop, 1 = Reverse Run) H5-12 = 1: Forward/Reverse (0 = Forward, 1 = Reverse)
	bit 2	External Fault (EF0)
	bit 3	Fault Reset
	bit 4	Multi-Function Input 1 Function is ComRef when H1-01 = 40 (Forward/Stop). **Note:** When the bit at ComCtrl is turned on, commands from MEMOBUS/Modbus communications take control of the operation. However, when a communications option card is connected, that option card is given priority.
	bit 5	Multi-Function Input 2 Function is ComCtrl when H1-02 = 41 (Reverse/Stop).
	bit 6	Multi-Function Input 3
	bit 7	Multi-Function Input 4
	bit 8	Multi-Function Input 5
	bit 9	Multi-Function Input 6
	bit A	Multi-Function Input 7
	bit B	Multi-Function Input 8
	bit C to F	Reserved
0002H	Frequency Reference	Units are determined by parameter o1-03.
0003H	Output voltage gain/ Unit: 0.1% Range: 20 (2.0%) to 2000 (200.0%), Default when power on: 1000 (100.0%)	
0004H	Torque Reference/Torque Limit, 0.1% units, signed (Usable only if Torque Control is enabled)	
0005H	Torque Compensation, 0.1% units, signed (Usable only if Torque Control is enabled)	
0006H	PID Target, 0.01% units, signed	
0007H	Analog Output Terminal FM Setting (10 V / 4000 H)	
0008H	Analog Output Terminal AM Setting (10 V / 4000 H)	
0009H	Settings for Multi-Function Digital Outputs	
	bit 0	Multi-Function Contact Output 1 (terminal M1-M2)
	bit 1	Multi-Function Contact Output 2 (terminal M3-M4)
	bit 2	Multi-Function Contact Output 3 (terminal M5-M6)
	bit 3 to 5	Reserved
	bit 6	Enables the function in bit 7
	bit 7	Fault Contact Output (terminal MA/MB-MC)
	bit 8 to F	Reserved
000AH	Pulse Output Terminal MP Setting, 1 Hz units, Setting Range: 0 to 32000	
000BH to 000EH	Reserved	

Register No.	Contents	
000FH	Control Selection Setting	
	bit 0	Reserved
	bit 1	PID Setpoint Input
	bit 2	Torque reference / torque limit input (enables the setting from MEMOBUS/Modbus)
	bit 3	Torque compensation input (enables the setting from MEMOBUS/Modbus)
	bit 4 to B	Reserved
	bit C	Enable Terminal S5 Input for Broadcast Data
	bit D	Enable Terminal S6 Input for Broadcast Data
	bit E	Enable Terminal S7 Input for Broadcast Data
	bit F	Enable Terminal S8 Input for Broadcast Data
0010H to 001AH	Reserved	
001BH	Analog Monitor Option AO-A3 Analog Output 1 (10 V/4000 H)	
001CH	Analog Monitor Option AO-A3 Analog Output 2 (10 V/4000 H)	
001DH	Digital Output Option DO-A3 Output (Binary)	
001EH to 001FH	Reserved	

◆ Monitor Data

Monitor data can be read only.

Register No.	Contents	
0020H	Drive Status 1	
	bit 0	During Run
	bit 1	During Reverse
	bit 2	Drive Ready
	bit 3	Fault
	bit 4	Data Setting Error
	bit 5	Multi-Function Contact Output 1 (terminal M1-M2)
	bit 6	Multi-Function Contact Output 2 (terminal M3-M4)
	bit 7	Multi-Function Contact Output 3 (terminal M5-M6)
	bit 8 to bit D	Reserved
	bit E	When ComRef has been enabled
	bit F	When ComCtrl has been enabled
0021H	Fault Contents 1	
	bit 0	Overcurrent (oC), Ground fault (GF)
	bit 1	Drive Overheat Warning (ov)
	bit 2	Drive Overload (oL2)
	bit 3	Overheat 1 (oH1), Drive Overheat Warning (oH2)
	bit 4	Dynamic Braking Transistor Fault (rr), Braking Resistor Overheat (rH)
	bit 5	Reserved
	bit 6	PID Feedback Loss (FbL / FbH)
	bit 7	EF to EF8: External Fault
	bit 8	CPF□□: Hardware Fault (includes oFx)
	bit 9	Motor Overload (oL1), Overtorque Detection 1/2 (oL3/oL4), Undertorque Detection 1/2 (UL3/UL4)
	bit A	PG Disconnected (PGo), PG Hardware Fault (PGoH), Overspeed (oS), Speed Deviation (dEv)
	bit B	Main Circuit Undervoltage (Uv)
	bit C	DC Bus Undervoltage (Uv1), Control Power Supply Voltage Fault (Uv2), Undervoltage 3 (Uv3)
	bit D	Output Phase Loss (LF), Input Phase Loss (PF)
	bit E	MEMOBUS/Modbus Communication Error (CE), Option Communication Error (bUS)
	bit F	External Digital Operator Connection Fault (oPr)

Register No.	Contents	
0022H	Data Link Status	
	bit 0	Writing data or switching motors
	bit 1	Reserved
	bit 2	
	bit 3	Upper or lower limit error
	bit 4	Data conformity error
	bit 5	Writing to EEPROM
	bit 6	0: Write into EEPROM. 1: Write in RAM only. **Note:** Enabled only when H5-17 = 1.
	bit 7 to bit F	Reserved
0023H	Frequency Reference <I>	
0024H	Output Frequency <I>	
0025H	Output Voltage Reference, 0.1 V units (units are determined by parameter H5-10)	
0026H	Output Current **Note:** Display is in the following units: 2A0004 to 2A0040 and 4A0002 to 4A0023: 0.01 A 2A0056 to 2A0415 and 4A0031 to 4A0675: 0.1 A 4A0930 and 4A1200: 1 A	
0027H	Output Power	
0028H	Torque Reference	
0029H	Fault Contents 2	
	bit 0	Output Short Circuit or IGBT Fault (SC)
	bit 1	Ground Fault (GF)
	bit 2	Input Phase Loss (PF)
	bit 3	Output Phase Loss (LF)
	bit 4	Braking Resistor Overheat (rH)
	bit 5	Reserved
	bit 6	Motor Overheat 2 (PTC input) (oH4)
	bit 7 to bit F	Reserved
002AH	Alarm Contents 1	
	bit 0, 1	Reserved
	bit 2	Forward/Reverse Run Command Input Error (EF)
	bit 3	Drive Baseblock (bb)
	bit 4	Overtorque Detection 1 (oL3)
	bit 5	Heatsink Overheat (oH)
	bit 6	Drive Overheat Warning (ov)
	bit 7	Undervoltage (Uv)
	bit 8	Internal Fan Fault (FAn)
	bit 9	MEMOBUS/Modbus Communication Error (CE)
	bit A	Option Communication Error (bUS)
	bit B	Undertorque Detection 1/2 (UL3/UL4)
	bit C	Motor Overheat (oH3)
	bit D	PID Feedback Loss (FbL, FbH)
	bit E	Reserved
	bit F	Serial Communication Transmission Error (CALL)

Register No.	Contents	
002BH	Input Terminal Status	
	bit 0	Terminal S1 Closed
	bit 1	Terminal S2 Closed
	bit 2	Terminal S3 Closed
	bit 3	Terminal S4 Closed
	bit 4	Terminal S5 Closed
	bit 5	Terminal S6 Closed
	bit 6	Terminal S7 Closed
	bit 7	Terminal S8 Closed
	bit 8 to bit F	Reserved
002CH	Drive Status 2	
	bit 0	During Run
	bit 1	Zero Speed
	bit 2	Speed Agree
	bit 3	User Speed Agree
	bit 4	Frequency Detection 1
	bit 5	Frequency Detection 2
	bit 6	Drive Ready
	bit 7	During Undervoltage
	bit 8	During Baseblock
	bit 9	Frequency Reference from Operator Keypad
	bit A	Run Command from Operator Keypad
	bit B	Over/Undertorque Detection 1, 2
	bit C	Frequency Reference Loss
	bit D	During Fault Restart
	bit E	Fault
	bit F	Communication Timeout
002DH	Output Terminal Status	
	bit 0	Multi-Function Contact Output 1 (terminal M1-M2)
	bit 1	Multi-Function Contact Output 2 (terminal M3-M4)
	bit 2	Multi-Function Contact Output 3 (terminal M5-M6)
	bit 3 to 6	Reserved
	bit 7	Fault Contact Output (terminal MA/MB-MC)
	bit 8 to F	Reserved
002EH	Reserved	
002FH	Frequency Reference Bias (from Up/Down 2 Function), 0.1% units	
0030H	Reserved	
0031H	DC Bus Voltage, 1 Vdc units	
0032H	Torque Reference (U1-09), 1% units	
0033H	Reserved	
0034H	Product Code 1 [ASCII], Product Type (A0 for A1000)	
0035H	Product Code 2 [ASCII], Region Code	
0036H, 0037H	Reserved	
0038H	PID Feedback, 0.1% units, unsigned, 100% / max. output frequency	
0039H	PID Input, 0.1% units, signed, 100% / max. output frequency	
003AH	PID Output, 0.1% units, signed, 100% / max. output frequency	
003BH, 003CH	Reserved	

Register No.	Contents	
003DH	Communications Error Contents <3>	
	bit 0	CRC Error
	bit 1	Data Length Error
	bit 2	Reserved
	bit 3	Parity Error
	bit 4	Overrun Error
	bit 5	Framing Error
	bit 6	Timeout
	bit 7 to bit F	Reserved
003EH	Output Frequency	r/min <4>
003FH		0.01% units
0040H to 004AH	Used for various monitors U1-□□. *Refer to U: Monitors on page 646* for parameter details.	
004BH	Drive status (U1-12)	
	bit 0	During Run
	bit 1	During Zero Speed
	bit 2	During Reverse Run
	bit 3	During Fault Reset Signal Input
	bit 4	During Speed Agree
	bit 5	Drive Ready
	bit 6	Alarm
	bit 7	Fault
	bit 8	During Operation Error (oPE□□)
	bit 9	During Momentary Power Loss
	bit A	Motor 2 selected
	bit B	Reserved
	bit E	ComRef status, NetRef status
	bit F	ComCtrl status, NetCtrl status
004CH to 007EH	Used for monitors U1-□□, U4-□□, U5-□□ and U6-□□. *Refer to U2: Fault Trace on page 649* and *Refer to U3: Fault History on page 650* for parameter details.	
007FH	Minor Fault Code, *Refer to Alarm Register Contents on page 731* for Minor Fault codes.	
0080H to 0097H	Used for monitors U2-□□, U3-□□. *Refer to U: Monitors on page 646* for parameter details and *Refer to Fault Trace Contents on page 729* for register value descriptions.	
0098H, 0099H	U4-01 (Cumulative Operation Time) Example: When U4-01 (Cumulative Operation Time) is 12345 hours, then 0098H = 1234 and 0099H = 5.	
009AH, 009BH	U4-03 (Cooling Fan Operation Time) Example: When U4-03 (Cooling Fan Operation Time) is 12345 hours, then 009AH = 1234 and 009BH = 5.	
009CH to 00AAH	Reserved	
00ABH	Drive Rated Current <2>	
00ACH	Motor Speed (U1-05)	r/min units <4>
00ADH		0.01% units
00AEH, 00AFH	Reserved	

Register No.	Contents	
00B0H	Option Code Connected to CN5-A	Register contains ASCII code of the option card. AI-A3 = 0003H AO-A3 = 0004H DI-A3 = 0001H DO-A3 = 0002H PG-B3 = 0011H PG-RT3 = 0023H PG-X3 = 0012H SI-B3 = 1002H SI-C3 = 5343H SI-EM3 = 1005H SI-EN3 = 1006H SI-ES3 = 1001H SI-ET3 = 1004H SI-N3 = 534EH SI-P3 = 5350H SI-S3 = 5353H SI-T3 = 5354H SI-W3 = 1003H
00B1H	Reserved	
00B2H	Option Code Connected to CN5-B	
00B3H	Option Code Connected to CN5-C	
00B4H	Reserved	
00B5H	Frequency Reference After Soft-starter (U1-16)	r/min units <4>
00B6H		0.01% units
00B7H	Frequency Reference	r/min <4>
00B8H		0.01% units
00B9H to 00BEH	Reserved	
00BFH	Lists the last two digits of operation error code oPE□□.	
00C0H	Fault Contents 3	
	bit 1	DC Bus Undervoltage (Uv1)
	bit 2	Control Power Supply Undervoltage (Uv2)
	bit 3	Undervoltage 3 (Soft-Charge Bypass Circuit Fault) (Uv3)
	bit 4	Output Short-Circuit or IGBT Fault (SC)
	bit 5	Ground Fault (GF)
	bit 6	Overcurrent (oC)
	bit 7	Drive Overheat Warning (ov)
	bit 8	Heatsink Overheat (oH)
	bit 9	Overheat 1 (oH1)
	bit A	Motor Overload (oL1)
	bit B	Drive Overload (oL2)
	bit C	Overtorque Detection 1 (oL3)
	bit D	Overtorque Detection 2 (oL4)
	bit E	Dynamic Braking Transistor Fault (rr)
	bit F	Braking Resistor Overheat (rH)

Register No.	Contents	
00C1H	Fault Contents 4	
	bit 0	External Fault at input terminal S3 (EF3)
	bit 1	External Fault at input terminal S4 (EF4)
	bit 2	External Fault at input terminal S5 (EF5)
	bit 3	External Fault at input terminal S6 (EF6)
	bit 4	External Fault at input terminal S7 (EF7)
	bit 5	External Fault at input terminal S8 (EF8)
	bit 6	Internal Fan Fault (FAn)
	bit 7	Overspeed (os)
	bit 8	Excessive Speed Deviation (dEv)
	bit 9	PG Disconnected (PGo)
	bit A	Input Phase Loss (PF)
	bit B	Output Phase Loss (LF)
	bit C	Motor Overheat (PTC input) (oH3)
	bit D	External Digital Operator Connection Fault (oPr)
	bit E	EEPROM Write Error (Err)
	bit F	Motor Overheat Fault (PTC input) (oH4)
00C2H	Fault Contents 5	
	bit 0	MEMOBUS/Modbus Communication Error (CE)
	bit 1	Option Communication Error (bUS)
	bit 2, 3	Reserved
	bit 4	Control Fault (CF)
	bit 5	Zero Servo Fault (SvE)
	bit 6	Option External Fault (EF0)
	bit 7	PID Feedback Loss (FbL)
	bit 8	Undertorque Detection 1 (UL3)
	bit 9	Undertorque Detection 2 (UL4)
	bit A	High Slip Braking Overload (oL7)
	bit B to E	Reserved
	bit F	Hardware Fault (includes oFx)
00C3H	Fault Contents 6	
	bit 0	Reserved
	bit 1	Z Pulse Fault (dv1)
	bit 2	Z Pulse Noise Fault Detection (dv2)
	bit 3	Inversion Detection (dv3)
	bit 4	Inversion Prevention Detection (dv4)
	bit 5	Output Current Imbalance (LF2)
	bit 6	Pullout Detection (STo)
	bit 7	PG Hardware Fault (PGoH)
	bit 8	MECHATROLINK Watchdog Timer Error (E5)
	bit 9	Reserved
	bit A	Too many speed search restarts (SEr)
	bit B to F	Reserved

Register No.	Contents	
00C4H	Fault Contents 7	
	bit 0	PID Feedback Loss (FbH)
	bit 1	External Fault 1, input terminal S1 (EF1)
	bit 2	External Fault 2, input terminal S2 (EF2)
	bit 3	Mechanical Weakening Detection 1 (oL5)
	bit 4	Mechanical Weakening Detection 2 (UL5)
	bit 5	Current Offset Fault (CoF)
	bit 6, 7	Reserved
	bit 8	DriveWorksEZ Fault (dWFL)
	bit 9	EEPROM Memory DriveWorksEZ Data Error (dWF1)
	bit A to B	Reserved
	bit C	Output Voltage Detection Fault (voF)
	bit D	Braking Resistor Fault (rF)
	bit E	Braking Transistor Overload Fault (boL)
	bit F	Motor Overheat (NTC Input) (oH5)
00C5H	Fault Contents 8	
	bit 0	LSo Fault (LSo)
	bit 1	Node Setup Fault (nSE)
	bit 2	Thermistor Disconnect (THo)
	bit 3 to 9	Reserved
	bit A	Initial Polarity Estimation Timeout (dv7)
	bit B to D	Reserved
	bit E	Power Unit Output Phase Loss 3 (LF3)
	bit F	Current Unbalance (UnbC)
00C6H	Fault Contents 9	
	bit 0	Gate Drive Board Undervoltage (Uv4)
	bit 1 to F	Reserved
00C7H	Reserved	
00C8H	Alarm Contents 2	
	bit 0	Undervoltage (Uv)
	bit 1	Drive Overheat Warning (ov)
	bit 2	Heatsink Overheat (oH)
	bit 3	Drive Overheat Warning (oH2)
	bit 4	Overtorque 1 (oL3)
	bit 5	Overtorque 2 (oL4)
	bit 6	Forward/Reverse Run Command Input Errorr (EF)
	bit 7	Drive Baseblock (bb)
	bit 8	External Fault 3, input terminal S3 (EF3)
	bit 9	External Fault 4, input terminal S4 (EF4)
	bit A	External Fault 5, input terminal S5 (EF5)
	bit B	External Fault 6, input terminal S6 (EF6)
	bit C	External Fault 7, input terminal S7 (EF7)
	bit D	External Fault 8, input terminal S8 (EF8)
	bit E	Internal Fan Fault (FAn)
	bit F	Overspeed (oS)

Register No.	Contents	
00C9H	Alarm Contents 3	
	bit 0	Speed Deviation (dEv)
	bit 1	PG Disconnected (PGo)
	bit 2	External Digital Operator Connection Fault (oPr)
	bit 3	MEMOBUS/Modbus Communication Error (CE)
	bit 4	Option Communication Error (bUS)
	bit 5	Serial Communication Transmission Error (CALL)
	bit 6	Motor Overload (oL1)
	bit 7	Drive Overload (oL2)
	bit 8	Reserved
	bit 9	Option Card External fault (EF0)
	bit A	Motor 2 Switch command input during run (rUn)
	bit B	Reserved
	bit C	Serial Communication Transmission Error (CALL)
	bit D	Undertorque Detection 1 (UL3)
	bit E	Undertorque Detection 2 (UL4)
	bit F	MEMOBUS/Modbus Communication Test Mode Error (SE)
00CAH	Alarm Contents 4	
	bit 0	Reserved
	bit 1	Motor Overheat 1 (PTC Input) (oH3)
	bit 2 to 5	Reserved
	bit 6	PID Feedback Loss (FbL)
	bit 7	PID Feedback Loss (FbH)
	bit 9	Drive Disabled (dnE)
	bit A	PG Disconnected (PGo)
	bit B to F	Reserved
00CBH	Alarm Contents 5	
	bit 0	MECHATROLINK Watchdog Timer Error (E5)
	bit 1	Station Address Setting Error (AEr)
	bit 2	MECHATROLINK Comm. Cycle Setting Error (CyC)
	bit 3	High Current Alarm (HCA)
	bit 4	Cooling Fan Maintenance Time (LT-1)
	bit 5	Soft Charge Bypass Relay Maintenance Time (LT-2)
	bit 6	Reserved
	bit 7	SI-S EEPROM Error (EEP)
	bit 8	External Fault 1 (input terminal S1) (EF1)
	bit 9	External Fault 2 (input terminal S2) (EF2)
	bit A	Safe Disable Input (HbbF)
	bit B	Safe Disable Input (Hbb)
	bit C	Mechanical Weakening Detection 1 (oL5)
	bit D	Mechanical Weakening Detection 2 (UL5)
	bit E, F	Reserved

Register No.	Contents	
00CCH	Alarm Contents 6	
	bit 0	Output Voltage Detection Fault (VoF)
	bit 1	IGBT Maintenance Time (90%) (TrPC)
	bit 2	Capacitor Maintenance Time (LT-3)
	bit 3	IGBT Maintenance Time (50%) (LT-4)
	bit 4	Braking Transistor Overload Fault (boL)
	bit 5 to 6	Reserved
	bit 7	Motor Overheat (NTC Input) (oH5)
	bit 8	DriveWorksEZ Fault (dWAL)
	bit 9 to B	Reserved
	bit C	Thermistor Disconnect (THo)
	bit D to F	Reserved
00CDH to 00CFH	Reserved	
00D0H	CPF Contents 1	
	bit 0, 1	Reserved
	bit 2	A/D Conversion Error (CPF02)
	bit 3	PWM Data Fault (CPF03)
	bit 4, 5	Reserved
	bit 6	EEPROM Memory Data Error (CPF06)
	bit 7	Terminal Board Connection Error (CPF07)
	bit 8	EEPROM Serial Communications Fault (CPF08)
	bit 9, A	Reserved
	bit B	RAM Fault (CPF11)
	bit C	FLASH Memory Fault (CPF12)
	bit D	Watchdog Circuit Exception (CPF13)
	bit E	Control Circuit Fault (CPF14)
	bit F	Reserved
00D1H	CPF Contents 2	
	bit 0	Clock Fault (CPF16)
	bit 1	Timing Fault (CPF17)
	bit 2	Control Circuit Fault (CPF18)
	bit 3	Control Circuit Fault (CPF19)
	bit 4	Hardware fault at power up (CPF20)
	bit 5	Hardware fault at communication start up (CPF21)
	bit 6	A/D Conversion Fault (CPF22)
	bit 7	PWM Feedback Fault (CPF23)
	bit 8	Drive Unit Signal Fault (CPF24)
	bit 9	Terminal board is not properly connected. (CPF25)
	bit A	ASIC BB Circuit Error (CPF26)
	bit B	ASIC PWM Setting Register Error (CPF27)
	bit C	ASIC PWM Pattern Error (CPF28)
	bit D	ASIC On-delay Error (CPF29)
	bit E	ASIC BBON Error (CPF30)
	bit F	ASIC Code Error (CPF31)

Register No.	Contents	
00D2H	CPF Contents 3	
	bit 0	ASIC Start-up Error (CPF32)
	bit 1	Watch-dog Error (CPF33)
	bit 2	ASIC Power/Clock Error (CPF34)
	bit 3	External A/D Converter Error (CPF35)
	bit 4 to 7	Reserved
	bit 8	Control Circuit Error (CPF40)
	bit 9	Control Circuit Error (CPF41)
	bit A	Control Circuit Error (CPF42)
	bit B	Control Circuit Error (CPF43)
	bit C	Control Circuit Error (CPF44)
	bit D	Control Circuit Error (CPF45)
	bit E, F	Reserved
00D3H to 00D7H	Reserved	
00D8H	oFA0☐ Contents (CN5-A)	
	bit 0	Option Compatibility Error (oFA00)
	bit 1	Option not properly connected (oFA01)
	bit 2 to 4	Reserved
	bit 5	A/D Conversion Error (oFA05)
	bit 6	Option Response Error (oFA06)
	bit 7 to F	Reserved
00D9H	oFA1☐ Contents (CN5-A)	
	bit 0	Option RAM Fault (oFA10)
	bit 1	Option Operation Mode Fault (SLMOD) (oFA11)
	bit 2	Drive Receive CRC Error (oFA12)
	bit 3	Drive Receive Frame Error (oFA13)
	bit 4	Drive Receive Abort Error (oFA14)
	bit 5	Option Receive CRC Error (oFA15)
	bit 6	Option Receive Frame Error (oFA16)
	bit 7	Option Receive Abort Error (oFA17)
	bit 8 to F	Reserved
00DAH to 00DBH	Reserved	
00DBH	oFA3☐ Contents (CN5-A)	
	bit 0	Comm. ID Error (oFA30)
	bit 1	Model Code Error (oFA31)
	bit 2	Sumcheck Error (oFA32)
	bit 3	Comm. option timeout waiting for response (oFA33)
	bit 4	MEMOBUS Timeout (oFA34)
	bit 5	Drive timeout waiting for response (oFA35)
	bit 6	CI Check Error (oFA36)
	bit 7	Drive timeout waiting for response (oFA37)
	bit 8	Control Command Selection Error (oFA38)
	bit 9	Drive timeout waiting for response (oFA39)
	bit A	Control Response Selection 1 Error (oFA40)
	bit B	Drive timeout waiting for response (oFA41)
	bit C	Control Response Selection 2 Error (oFA42)
	bit D	Drive timeout waiting for response (oFA43)
	bit E, F	Reserved

Register No.	Contents	
00DCH	oFb0☐ Contents (CN5-B)	
	bit 0	Option compatibility error (oFb00)
	bit 1	Option not properly connected (oFb01)
	bit 2	Same type of option card already connected (oFb02)
	bit 3, 4	Reserved
	bit 5	A/D Conversion Fault (oFb05)
	bit 6	Option Response Error (oFb06)
	bit 7 to F	Reserved
00DDH	oFb1☐ Contents (CN5-B)	
	bit 0	Option RAM Fault (oFb10)
	bit 1	Option Operation Mode Fault (SLMOD) (oFb11)
	bit 2	Drive Receive CRC Error (oFb12)
	bit 3	Drive Receive Frame Error (oFb13)
	bit 4	Drive Receive Abort Error (oFb14)
	bit 5	Option Receive CRC Error (oFb15)
	bit 6	Option Receive Frame Error (oFb16)
	bit 7	Option Receive Abort Error (oFb17)
	bit 8 to F	Reserved
00DEH to 00DFH	Reserved	
00E0H	oFb3☐ Contents (CN5-B)	
	bit 0	Comm. ID Error (oFb30)
	bit 1	Model Code Error (oFb31)
	bit 2	Sumcheck Error (oFb32)
	bit 3	Comm. option timeout waiting for response (oFb33)
	bit 4	MEMOBUS Timeout (oFb34)
	bit 5	Drive timeout waiting for response (oFb35)
	bit 6	CI Check Error (oFb36)
	bit 7	Drive timeout waiting for response (oFb37)
	bit 8	Control Command Selection Error (oFb38)
	bit 9	Drive timeout waiting for response (oFb39)
	bit A	Control Response Selection 1 Error (oFb40)
	bit B	Drive timeout waiting for response (oFb41)
	bit C	Control Response Selection 2 Error (oFb42)
	bit D	Drive timeout waiting for response (oFb43)
	bit E, F	Reserved
00E1H	oFC0☐ Contents (CN5-C)	
	bit 0	Option compatibility error (oFC00)
	bit 1	Option not properly connected (oFC01)
	bit 2	Same type of option card already connected (oFC02)
	bit 3, 4	Reserved
	bit 5	A/D Conversion Fault (oFC05)
	bit 6	Option Response Error (oFC06)
	bit 7 to F	Reserved

Register No.	Contents	
00E2H	oFC1□ Contents (CN5-C)	
	bit 0	Option RAM Fault (oFC10)
	bit 1	Option Operation Mode Fault (SLMOD) (oFC11)
	bit 2	Drive Receive CRC Error (oFC12)
	bit 3	Drive Receive Frame Error (oFC13)
	bit 4	Drive Receive Abort Error (oFC14)
	bit 5	Option Receive CRC Error (oFC15)
	bit 6	Option Receive Frame Error (oFC16)
	bit 7	Option Receive Abort Error (oFC17)
	bit 8 to F	Reserved
00E3H	Reserved	
00E4H	oFC5□ Contents (CN5-C)	
	bit 0	Encoder Option AD Conversion Error (oFC50)
	bit 1	Encoder Option Analog Circuit Error (oFC51)
	bit 2	Encoder Communication Timeout (oFC52)
	bit 3	Encoder Communication Data Error (oFC53)
	bit 4	Encoder Error (oFC54)
	bit 5	Resolver Error (oFC55)
	bit 6 to F	Reserved
00E5H to 00FAH	Reserved	
00FBH	Output Current	
00FFH	Reserved	

<1> Parameter o1-03, Digital Operator Display Selection, determines the units.

<2> Display is in the following units:
2A0004 to 2A0040, 4A0002 to 4A0023, and 5A0007 to 5A0017: 0.01 A units.
2A0056 to 2A0415, 4A0031 to 4A0675, and 5A0022 to 5A0242: 0.1 A units.
4A0930 and 4A1200: 1 A units.

<3> Communication error contents are saved until the fault is reset.

<4> Set the number of motor poles to parameter E2-04, E4-04, or E5-04 depending on the motor being used.

◆ Broadcast Messages

Data can be written from the master to all slave devices at the same time.

The slave address in a broadcast command message must be set to 00H. All slaves will receive the message, but will not respond.

Register No.	Contents	
0001H	Digital Input Command	
	bit 0	Forward Run (0: Stop 1: Run)
	bit 1	Direction Command (0: Forward, 1: Reverse)
	bit 2, 3	Reserved
	bit 4	External Fault
	bit 5	Fault Reset
	bit 6 to B	Reserved
	bit C	Multi-Function Digital Input S5
	bit D	Multi-Function Digital Input S6
	bit E	Multi-Function Digital Input S7
	bit F	Multi-Function Digital Input S8
0002H	Frequency Reference	30000/100%

◆ Fault Trace Contents

The table below shows the fault codes that can be read out by MEMOBUS/Modbus commands from the U2-□□ monitor parameters.

Table C.6 Fault Trace / History Register Contents

Fault Code	Fault Name
0002H	DC Bus Undervoltage (Uv1)
0003H	Control Power Supply Voltage Fault (Uv2)
0004H	Undervoltage 3 (Uv3)
0005H <1>	Output Short-Circuit or IGBT Fault (SC)
0006H	Ground Fault (GF)
0007H	Overcurrent (oC)
0008H	Drive Overheat Warning (ov)
0009H	Heatsink Overheat (oH)
000AH	Overheat 1 (oH1)
000BH	Motor Overload (oL1)
000CH	Drive Overload (oL2)
000DH	Overtorque Detection 1 (oL3)
000EH	Overtorque Detection 2 (oL4)
000FH	Dynamic Braking Transistor (rr)
0010H	Braking Resistor Overheat (rH)
0011H	External Fault at Input Terminal S3 (EF3)
0012H	External Fault at Input Terminal S4 (EF4)
0013H	External Fault at Input Terminal S5 (EF5)
0014H	External Fault at Input Terminal S6 (EF6)
0015H	External Fault at Input Terminal S7 (EF7)
0016H	External Fault at Input Terminal S8 (EF8)
0017H	Internal Fan Fault (FAn)
0018H	Overspeed (oS)
0019H	Speed Deviation (dEv)
001AH	PG Disconnect (PGo)
001BH	Input Phase Loss (PF)
001CH	Output Phase Loss (LF)
001DH	Motor Overheat (PTC input) (oH3)
001EH	Digital Operator Connection (oPr)
001FH	EEPROM Write Error (Err)
0020H	Motor Overheat (PTC input) (oH4)
0021H	MEMOBUS/Modbus Communication Error (CE)
0022H	Option Communication Error (bUS)
0025H	Control Fault (CF)
0026H	Zero-Servo Fault (SvE)
0027H	Option External Fault (EF0)
0028H	PID Feedback Loss (FbL)
0029H	Undertorque Detection 1 (UL3)
002AH	Undertorque Detection 2 (UL4)
002BH	High Slip Braking Overload (oL7)
0030H	Hardware Fault (including oFx)
0032H	Z Pulse Fault (dv1)
0033H	Z Pulse Noise Fault Detection (dv2)
0034H	Inversion Detection (dv3)
0035H	Inversion Prevention Detection (dv4)

Fault Code	Fault Name
0036H	Output Current Imbalance (LF2)
0037H	Pullout Detection (Sto)
0038H	PG Hardware Fault (PGoH)
0039H	MECHATROLINK Watchdog Timer Error (E5)
003BH	Too Many Speed Search Restarts (SEr)
0041H	PID Feedback Loss (FbH)
0042H	External Fault 1, Input Terminal S1 (EF1)
0043H	External Fault 2, Input Terminal S2 (EF2)
0044H	Mechanical Weakening Detection 1 (oL5)
0045H	Mechanical Weakening Detection 2 (UL5)
0046H	Current Offset Fault (CoF)
0047H	PLC Detection Error 1 (PE1)
0048H	PLC Detection Error 2 (PE2)
0049H	DriveWorksEZ Fault (dWFL)
004AH <2>	EEPROM Memory DriveWorksEZ Data Error (dWF1)
004DH	Output Voltage Detection Fault (voF)
004EH	Braking Resistor Transistor Fault (rF)
004FH	Braking Transistor Overload Fault (boL)
0050H	Motor Overheat (NTC Input) (oH5)
0051H	LSo Fault (LSo)
0052H	Node Setup Fault (nSE)
0053H	Thermistor Disconnect (THo)
005BH <1>	Initial Polarity Estimation Timeout (dv7)
005FH	Power Unit Output Phase Loss 3 (LF3)
0060H	Current Unbalance (UnbC)
0061H	Power Supply Module Undervoltage (Uv4)
0083H	A/D Conversion Error (CPF02)
0084H	PWM Data Fault (CPF03)
0087H	EEPROM Memory Data Error (CPF06)
0088H	Terminal Board Connection Error (CPF07)
0089H	EEPROM Serial Communication Fault (CPF08)
008CH	RAM Fault (CPF11)
008DH	Flash Memory Circuit Exception (CPF12)
008EH	Watchdog Circuit Exception (CPF13)
008FH	Control Circuit Fault (CPF14)
0091H	Clock Fault (CPF16)
0092H	Timing Fault (CPF17)
0093H	Control Circuit Fault (CPF18)
0094H	Control Circuit Fault (CPF19)
0095H	Hardware Fault at Power Up (CPF20)
0096H	Hardware Fault at Communication Start Up (CPF21)
0097H	A/D Conversion Fault (CPF22)
0098H	PWM Feedback Fault (CPF23)
0099H	Drive Unit Signal Fault (CPF24)
009AH	Terminal Board is Not Properly Connected. (CPF25)

Fault Code	Fault Name
009BH	ASIC BB Circuit Error (CPF26)
009CH	ASIC PWM Setting Register Error (CPF27)
009DH	ASIC PWM Pattern Error (CPF28)
009EH	ASIC On-delay Error (CPF29)
009FH	ASIC BBON Error (CPF30)
00A0H	ASIC Code Error (CPF31)
00A1H	ASIC Start-up Error (CPF32)
00A2H	Watch-dog Error (CPF33)
00A3H	ASIC Power/Clock Error (CPF34)
00A4H	External A/D Converter Error (CPF35)
00A9H	Control Circuit Error (CPF40)
00AAH	Control Circuit Error (CPF41)
00ABH	Control Circuit Error (CPF42)
00ACH	Control Circuit Error (CPF43)
00ADH	Control Circuit Error (CPF44)
00AEH	Control Circuit Error (CPF45)
0101H	Option Compatibility Error (oFA00)
0102H	Option Not Properly Connected (oFA01)
0106H	A/D Conversion Error (oFA05)
0107H	Option Response Error (oFA06)
0111H	Option RAM Fault (oFA10)
0112H	Option Operation Mode Fault (SLMOD) (oFA11)
0113H	Drive Receive CRC Error (oFA12)
0114H	Drive Receive Frame Error (oFA13)
0115H	Drive Receive Abort Error (oFA14)
0116H	Option Receive CRC Error (oFA15)
0117H	Option Receive Frame Error (oFA16)
0118H	Option Receive Abort Error (oFA17)
0131H	Comm. ID Error (oFA30)
0132H	Model Code Error (oFA31)
0133H	Sumcheck Error (oFA32)
0134H	Comm. Option Timeout Waiting for Response (oFA33)
0135H	MEMOBUS Timeout (oFA34)
0136H	Drive Timeout Waiting for Response (oFA35)
0137H	CI Check Error (oFA36)
0138H	Drive Timeout Waiting for Response (oFA37)
0139H	Control Command Selection Error (oFA38)
013AH	Drive Timeout Waiting for Response (oFA39)
013BH	Control Response Selection 1 Error (oFA40)
013CH	Drive Timeout Waiting for Response (oFA41)
013DH	Control Response Selection 2 Error (oFA42)
013EH	Drive Timeout Waiting for Response (oFA43)
0201H	Option Compatibility Error (oFb00)
0202H	Option Connection Error (oFb01)
0203H	Same Type of Option Card Already Connected (oFb02)

Fault Code	Fault Name
0206H	A/D Conversion Error (oFb05)
0207H	Option Response Error (oFb06)
0211H	Option RAM Fault (oFb10)
0212H	Option Operation Mode Fault (SLMOD) (oFb11)
0213H	Drive Receive CRC Error (oFb12)
0214H	Drive Receive Frame Error (oFb13)
0215H	Drive Receive Abort Error (oFb14)
0216H	Option Receive CRC Error (oFb15)
0217H	Option Receive Frame Error (oFb16)
0218H	Option Receive Abort Error (oFb17)
0231H	Comm. ID Error (oFb30)
0232H	Model Code Error (oFb31)
0233H	Sumcheck Error (oFb32)
0234H	Comm. option Timeout Waiting for Response (oFb33)
0235H	MEMOBUS Timeout (oFb34)
0236H	Drive Timeout Waiting for Response (oFb35)
0237H	CI Check Error (oFb36)
0238H	Drive Timeout Waiting for Response (oFb37)
0239H	Control Command Selection Error (oFb38)
023AH	Drive Timeout Waiting for Response (oFb39)
023BH	Control Response Selection 1 Error (oFb40)
023CH	Drive Timeout Waiting for Response (oFb41)
023DH	Control Response Selection 2 Error (oFb42)
023EH	Drive Timeout Waiting for Response (oFb43)
0301H	Option Compatibility Error (oFC00)
0303H	Option Not Properly Connected (oFC01)
0304H	Same Type of Option Card Already Connected (oFC02)
0306H	A/D Conversion Error (oFC05)
0307H	Option Response Error (oFC06)
0311H	Option RAM Fault (oFC10)
0312H	Option Operation Mode Fault (SLMOD) (oFC11)
0313H	Drive Receive CRC Error (oFC12)
0314H	Drive Receive Frame Error (oFC13)
0315H	Drive Receive Abort Error (oFC14)
0316H	Option Receive CRC Error (oFC15)
0317H	Option Receive Frame Error (oFC16)
0318H	Option Receive Abort Error (oFC17)
0351H	Encoder Option AD Conversion Error (oFC50)
0352H	Encoder Option Analog Circuit Error (oFC51)
0353H	Encoder Communication Timeout (oFC52)
0354H	Encoder Communication Data Error (oFC53)
0355H	Encoder Error (oFC54)
0356H	Resolver Error (oFC55)

<1> Available in drive software versions PRG: 1015 and later.

<2> Available in drive software versions PRG: 1018 and later.

◆ Alarm Register Contents

The table below shows the alarm codes that can be read out from MEMOBUS/Modbus register 007FH.

Table C.7 Alarm Register 007FH Contents

Fault Code	Fault Name
0001H	Undervoltage (Uv)
0002H	Drive Overheat Warning (ov)
0003H	Heatsink Overheat (oH)
0004H	Drive Overheat Warning (oH2)
0005H	Overtorque 1 (oL3)
0006H	Overtorque 2 (oL4)
0007H	Forward/Reverse Run Command Input Error (EF)
0008H	Drive Baseblock (bb)
0009H	External Fault 3, input terminal S3 (EF3)
000AH	External Fault 4, input terminal S4 (EF4)
000BH	External Fault 5, input terminal S5 (EF5)
000CH	External Fault 6, input terminal S6 (EF6)
000DH	External Fault 7, input terminal S7 (EF7)
000EH	External Fault 8, input terminal S8 (EF8)
000FH	Internal Fan Fault (FAn)
0010H	Overspeed (oS)
0011H	Speed Deviation (dEv)
0012H	PG Disconnected (PGo)
0014H	MEMOBUS/Modbus Communication Error (CE)
0015H	Option Communication Error (bUS)
0016H	Serial Communication Transmission Error (CALL)
0017H	Motor Overload (oL1)
0018H	Drive Overload (oL2)
001AH	Option Card External Fault (EF0)
001BH	Motor Switch command input during run (rUn)
001DH	Serial Communication Transmission Error (CALL)
001EH	Undertorque Detection 1 (UL3)
001FH	Undertorque Detection 2 (UL4)
0020H	MEMOBUS/Modbus Communication Test Mode Error (SE)

Fault Code	Fault Name
0022H	Motor Overheat (oH3)
0027H	PID Feedback Loss (FbL)
0028H	PID Feedback Loss (FbH)
002AH	Drive Disabled (dnE)
002BH	PG Disconnected (PGo)
0031H	MECHATROLINK Watchdog Timer Error (E5)
0032H	Station Address Setting Error (AEr)
0033H	MECHATROLINK Comm. Cycle Setting Error (CyC)
0034H	High Current Alarm (HCA)
0035H	Cooling Fan Maintenance Time (LT-1)
0036H	Capacitor Maintenance Time (LT-2)
0038H	SI-S EEPROM Error (EEP)
0039H	External Fault (input terminal S1) (EF1)
003AH	External Fault (input terminal S2) (EF2)
003BH	Safe Disable Input (HbbF)
003CH	Safe Disable Input (Hbb)
003DH	Mechanical Weakening Detection 1 (oL5)
003EH	Mechanical Weakening Detection 2 (UL5)
003FH	PLC Alarm (PA1)
0040H	PLC Alarm (PA2)
0041H	Output Voltage Detection Fault (voF)
0042H	IGBT Maintenance Time (90%) (TrPC)
0043H	Soft Charge Bypass Relay Maintenance Time (LT-3)
0044H	IGBT Maintenance Time (50%) (LT-4)
0045H	Braking Transistor Overload (boL)
0048H	Motor Overheat (NTC Input) (oH5)
0049H	DriveWorksEZ Fault (dWAL)
004DH	Thermistor Disconnect (THo)

C.10 Enter Command

When writing parameters to the drive from the PLC using MEMOBUS/Modbus communication, parameter H5-11 determines whether an Enter command must be issued to enable these parameters. This section describes the types and functions of the Enter commands.

◆ Enter Command Types

The drive supports two types of Enter commands as shown in *Table C.8*. An Enter command is enabled by writing 0 to register numbers 0900H or 0910H. It is only possible to write to these registers; attempting to read from these registers will cause an error.

Table C.8 Enter Command Types

Register No.	Description
0900H	Simultaneously writes data into the EEPROM (non-volatile memory) of the drive and enables the data in RAM. Parameter changes remain after cycling power.
0910H	Writes data in the RAM only. Parameter changes are lost when the drive is shut off.

Note: The EEPROM can only be written to 100,000 times, so it is recommended to limit the number of times writing to the EEPROM. The Enter command registers are write-only and if these registers are read, the register address will be invalid (Error code: 02H). An Enter command is not required when reference or broadcast data are sent to the drive.

◆ Enter Command Settings when Upgrading the Drive

When replacing previous Yaskawa drive models with the A1000 and keeping the MEMOBUS/Modbus communications settings, set parameter H5-11 in accordance with the Enter command configuration in the older drive. H5-11 determines whether an Enter command is necessary to activate parameter changes in the drive.

- If upgrading from a G7 or F7 series drive to an A1000, set parameter H5-11 to 0.
- If upgrading from a V7 series drive to an A1000, set parameter H5-11 to 1.

■ H5-11 and the Enter Command

An enter command is not required when writing registers 0000H to 001FH. Changes to those registers take effect immediately, independent of the setting in parameter H5-11.

H5-11 Settings	H5-11 = 0	H5-11 = 1
Drive being replaced	G7, F7	V7
How parameter settings are enabled	When the Enter command is received from the master.	As soon as the value is changed.
Upper/lower limit check	Upper/lower limit check is performed, taking the settings of related parameters into account.	Checks only the upper/lower limits of the parameters that were changed.
Default value of related parameters	Not affected. The settings of related parameters remain unchanged. They must be changed manually if needed.	Default settings of related parameters are changed automatically.
Error handling when setting multiple parameters	Data is accepted even if one setting is invalid. The invalid setting will be discarded. No error message occurs.	Error occurs if only one setting is invalid. All data that was sent are discarded.

C.11 Communication Errors

◆ MEMOBUS/Modbus Error Codes

A list of MEMOBUS/Modbus errors appears below.

When an error occurs, remove whatever caused the error and restart communications.

Error Code	Error Name Cause
01H	Function Code Error
	Attempted to set a function code from a PLC other than 03H, 08H, and 10H.
02H	Register Number Error
	• A register number specified in the command message does not exist. • Attempted to send a broadcast message using other register numbers than 0001H or 0002H.
03H	Bit Count Error
	• Read data or write data is greater than 16 bits. Invalid command message quantity. • In a write message, the "Number of Data Items" contained within the message does not equal twice the amount of data words (i.e., the total of Data 1+ Data 2, etc.).
21H	Data Setting Error
	• Control data or parameter write data is outside the allowable setting range. • Attempted to write a contradictory parameter setting.
22H	Write Mode Error
	• During run, the user attempted to write a parameter that cannot be written to during run. • During an EEPROM memory data error (CPF06), the master attempted to write to a parameter other than A1-00 to A1-05, E1-03, or o2-04. • Attempted to write to read-only data.
23H	DC Bus Undervoltage Write Error
	During an undervoltage situation, the master attempted to write to parameters that cannot be written to during undervoltage.
24H	Write Error During Parameter Process
	Master attempted writing to the drive while the drive was processing parameter data.
25H	Writing into EEPROM Disabled
	An attempt was made to write data into EEPROM by MEMOBUS/Modbus communications when writing EEPROM is not possible. (When this error code occurs, an error message is displayed and the drive continues operation.)

◆ Slave Not Responding

In the following situations, the slave drive will ignore the command message sent from the master, and not send a response message:

- When a communications error (overrun, framing, parity, or CRC-16) is detected in the command message.
- When the slave address in the command message and the slave address in the drive do not match (remember to set the slave address for the drive using H5-01).
- When the gap between two blocks (8-bit) of a message exceeds 24 bits.
- When the command message data length is invalid.

Note: If the slave address specified in the command message is 00H, all slaves execute the write function, but do not return response messages to the master.

C.12 Self-Diagnostics

The drive has a built-in self-diagnosing function of the serial communication interface circuits. To perform the self-diagnosis function, use the following procedure.

DANGER! *Electrical Shock Hazard. Do not connect or disconnect wiring while the power is on. Failure to comply will result in death or serious injury. Before servicing, disconnect all power to the equipment. The internal capacitor remains charged even after the power supply is turned off. The charge indicator LED will extinguish when the DC bus voltage is below 50 Vdc. To prevent electric shock, wait at least one minute after all indicators are OFF and measure the DC bus voltage level to confirm safe level.*

1. Turn on the power to the drive.
2. Note the present terminal S6 function selection setting (H1-06) and set it for the communications test mode (H1-06 = 67).
3. Turn off the power to the drive.
4. With the power off, wire the drive as shown in ***Figure C.8***, connecting terminals R+ and S+, R- and S-, and S6 and SN.

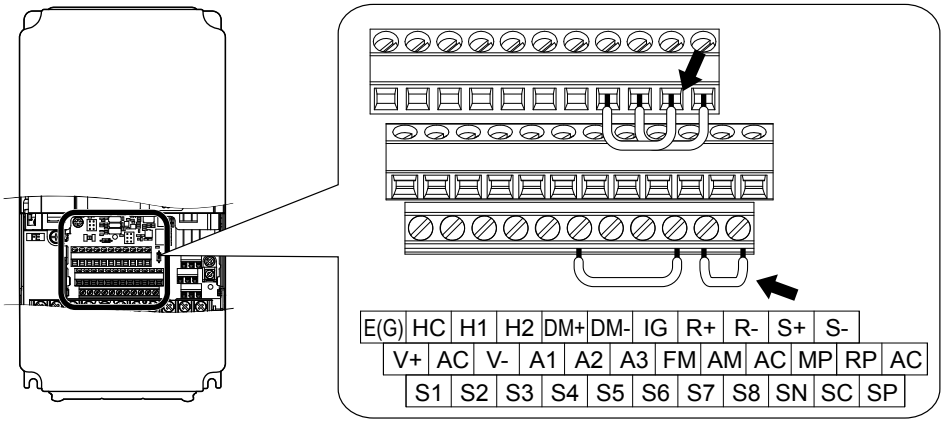

Figure C.8 Terminal Connections for Communication Self-Diagnostics

5. Verify that terminals SC to SP are connected by wire jumper.
6. Turn the power to the drive back on.
7. During normal operation, the drive will display “PASS” to indicate that the communications test mode is operating normally.

   When a fault occurs, the drive will display “CE” on the keypad display.
8. Turn off the power supply.
9. Remove the wire jumpers from terminal R+, R-, S+, S-, and S6-SN. Reset jumper SC to SP to its original position and set terminal S6 to its original function.
10. Return to normal operation.

Appendix: D

Standards Compliance

This appendix explains the guidelines and criteria for maintaining CE and UL standards.

D.1 SECTION SAFETY.....736
D.2 EUROPEAN STANDARDS.....738
D.3 UL AND CSA STANDARDS.....748
D.4 SAFE DISABLE INPUT FUNCTION.....768

D.1 Section Safety

⚠ DANGER

Electrical Shock Hazard

Before servicing, disconnect all power to the equipment. The internal capacitor remains charged even after the power supply is turned off. The charge indicator LED will extinguish when the DC bus voltage is below 50 Vdc. To prevent electric shock, wait for at least the time specified on the warning label, once all indicators are OFF, measure for unsafe voltages to confirm the drive is safe prior to servicing.

Failure to comply will result in death or serious injury.

⚠ WARNING

Electrical Shock Hazard

Do not operate equipment with covers removed.

Failure to comply could result in death or serious injury.

The diagrams in this section may show drives without covers or safety shields to show details. Be sure to reinstall covers or shields before operating the drives and run the drives according to the instructions described in this manual.

Always ground the motor-side grounding terminal.

Improper equipment grounding could result in death or serious injury by contacting the motor case.

Do not touch any terminals before the capacitors have fully discharged.

Failure to comply could result in death or serious injury.

Before wiring terminals, disconnect all power to the equipment. The internal capacitor remains charged even after the power supply is turned off. After shutting off the power, wait for at least the amount of time specified on the drive before touching any components.

Do not allow unqualified personnel to perform work on the drive.

Failure to comply could result in death or serious injury.

Installation, maintenance, inspection, and servicing must be performed only by authorized personnel familiar with installation, adjustment and maintenance of AC drives.

Do not perform work on the drive while wearing loose clothing, jewelry or without eye protection.

Failure to comply could result in death or serious injury.

Remove all metal objects such as watches and rings, secure loose clothing, and wear eye protection before beginning work on the drive.

Do not remove covers or touch circuit boards while the power is on.

Failure to comply could result in death or serious injury.

Fire Hazard

Tighten all terminal screws to the specified tightening torque.

Loose electrical connections could result in death or serious injury by fire due to overheating of electrical connections.

Do not use an improper voltage source.

Failure to comply could result in death or serious injury by fire.

Verify that the rated voltage of the drive matches the voltage of the incoming power supply before applying power.

Do not use improper combustible materials.

Failure to comply could result in death or serious injury by fire.

Attach the drive to metal or other noncombustible material.

NOTICE

Observe proper electrostatic discharge procedures (ESD) when handling the drive and circuit boards.

Failure to comply may result in ESD damage to the drive circuitry.

Never connect or disconnect the motor from the drive while the drive is outputting voltage.

Improper equipment sequencing could result in damage to the drive.

Do not use unshielded wire for control wiring.

Failure to comply may cause electrical interference resulting in poor system performance. Use shielded twisted-pair wires and ground the shield to the ground terminal of the drive.

Do not allow unqualified personnel to use the product.

Failure to comply could result in damage to the drive or braking circuit.

Carefully review instruction manual TOBPC72060000 or TOBPC72060001 when connecting a braking option to the drive.

Do not modify the drive circuitry.

Failure to comply could result in damage to the drive and will void warranty.

Yaskawa is not responsible for modification of the product made by the user. This product must not be modified.

Check all the wiring to ensure that all connections are correct after installing the drive and connecting other devices.

Failure to comply could result in damage to the drive.

If a fuse is blown or a Ground Fault Circuit Interrupter (GFCI) is tripped, check the wiring and the selection of the peripheral devices.

Contact your supplier if the cause cannot be identified after checking the above.

Do not restart the drive immediately operate the peripheral devices if a fuse is blown or a GFCI is tripped.

Check the wiring and the selection of peripheral devices to identify the cause. Contact your supplier before restarting the drive or the peripheral devices if the cause cannot be identified.

D.2 European Standards

Figure D.1 CE Mark

The CE mark indicates compliance with European safety and environmental regulations. It is required for engaging in business and commerce in Europe.

European standards include the Machinery Directive for machine manufacturers, the Low Voltage Directive for electronics manufacturers, and the EMC guidelines for controlling noise.

This drive displays the CE mark based on the EMC guidelines and the Low Voltage Directive.

- **Low Voltage Directive:** 2014/35/EU
- **EMC Guidelines:** 2014/30/EU

Devices used in combination with this drive must also be CE certified and display the CE mark. When using drives displaying the CE mark in combination with other devices, it is ultimately the responsibility of the user to ensure compliance with CE standards. After setting up the device, verify that conditions meet European standards.

◆ CE Low Voltage Directive Compliance

This drive has been tested according to European standard IEC/EN 61800-5-1:2007, and it fully complies with the Low Voltage Directive.

To comply with the Low Voltage Directive, be sure to meet the following conditions when combining this drive with other devices:

■ Area of Use

Do not use drives in areas with pollution higher than degree 2 and overvoltage category 3 in accordance with IEC/EN 60664.

■ Factory Recommended Branch Circuit Protection

Yaskawa recommends installing one of the following types of branch circuit protection to maintain compliance with UL508C. Semiconductor protective type fuses are preferred. Alternate branch circuit protection devices are also listed in *Table D.1*.

NOTICE: *If a fuse is blown or a Ground Fault Circuit Interrupter (GFCI) is tripped, check the wiring and the selection of peripheral devices to identify the cause. Contact Yaskawa before restarting the drive or the peripheral devices if the cause cannot be identified.*

Table D.1 Factory Recommended Drive Branch Circuit Protection

Drive Model	Fuse Type	
	Manufacturer: Bussmann	
	Model	Fuse Ampere Rating (A)
Three-Phase 200 V Class		
2A0004	FWH-70B	70
2A0006	FWH-70B	70
2A0008	FWH-70B	70
2A0010	FWH-70B	70
2A0012	FWH-70B	70
2A0018	FWH-90B	90
2A0021	FWH-90B	90
2A0030	FWH-100B	100
2A0040	FWH-200B	200
2A0056	FWH-200B	200
2A0069	FWH-200B	200
2A0081	FWH-300A	300
2A0110	FWH-300A	300
2A0138	FWH-350A	350

Drive Model	Fuse Type	
	Manufacturer: Bussmann	
	Model	Fuse Ampere Rating (A)
2A0169	FWH-400A	400
2A0211	FWH-400A	400
2A0250	FWH-600A	600
2A0312	FWH-700A	700
2A0360	FWH-800A	800
2A0415	FWH-1000A	1000
Three-Phase 400 V Class		
4A0002	FWH-40B	40
4A0004	FWH-50B	50
4A0005	FWH-70B	70
4A0007	FWH-70B	70
4A0009	FWH-90B	90
4A0011	FWH-90B	90
4A0018	FWH-80B	80
4A0023	FWH-100B	100
4A0031	FWH-125B	125
4A0038	FWH-200B	200
4A0044	FWH-250A	250
4A0058	FWH-250A	250
4A0072	FWH-250A	250
4A0088	FWH-250A	250
4A0103	FWH-250A	250
4A0139	FWH-350A	350
4A0165	FWH-400A	400
4A0208	FWH-500A	500
4A0250	FWH-600A	600
4A0296	FWH-700A	700
4A0362	FWH-800A	800
4A0414	FWH-800A	800
4A0515	FWH-1000A	1000
4A0675	FWH-1200A	1200
4A0930	FWH-1200A	1200
4A1200	FWH-1600A	1600
Three-Phase 600 V Class		
5A0003	FWP-50B	50
5A0004	FWP-50B	50
5A0006	FWP-60B	60
5A0009	FWP-60B	60
5A0011	FWP-70B	70
5A0017	FWP-100B	100
5A0022	FWP-100B	100
5A0027	FWP-125A	125
5A0032	FWP-125A	125
5A0041	FWP-175A	175
5A0052	FWP-175A	175
5A0062	FWP-250A	250
5A0077	FWP-250A	250
5A0099	FWP-250A	250

Drive Model	Fuse Type	
	Manufacturer: Bussmann	
	Model	Fuse Ampere Rating (A)
5A0125	FWP-350A	350
5A0145	FWP-350A	350
5A0192	FWP-600A	600
5A0242	FWP-600A	600

■ Grounding

The drive is designed to be used in T-N (grounded neutral point) networks. If installing the drive in other types of grounded systems, contact your Yaskawa representative for instructions.

■ CE Standards Compliance for DC Power Supply Input

Install the fuses in the following tables to meet CE standards.

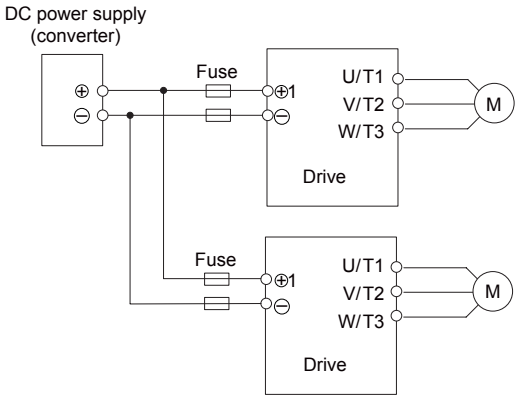

Figure D.2 Example of DC Power Supply Input (Two Drives Connected in Series)

Note:
1. When connecting multiple drives together, make sure that each drive has its own fuse. Replace all fuses when one fuse blows.
2. *Refer to Standard Connection Diagram on page 112* for an AC power supply.
3. The recommended fuses and fuse holders are made by Fuji Electric.

Table D.2 200 V Class Fuses and Fuse Holders

Drive Model	DC Power Supply Input				
	Fuse			Fuse Holder	
	Type	Rated Short Circuit Braking Current (kA)	Qty.	Type	Qty.
2A0004	CR2LS-30	100	2	CM-1A	1
2A0006					
2A0008					
2A0010	CR2LS-50				
2A0012					
2A0018	CR2LS-75				
2A0021	CR2LS-100				
2A0030	CR2L-125		2	CM-2A	1
2A0040	CR2L-150				
2A0056	CR2L-175				
2A0069	CR2L-225		2	<1>	
2A0081	CR2L-260				
2A0110	CR2L-300				
2A0138	CR2L-350				
2A0169	CR2L-400				
2A0211	CR2L-450				
2A0250	CR2L-600				
2A0312					
2A0360	CR2L-600	200			
2A0415	CS5F-1200				

<1> Manufacturer does not recommend a specific fuse holder for this fuse. Contact Yaskawa or your nearest sales representative for fuse dimensions.

Table D.3 400 V Class Fuses and Fuse Holders

Drive Model	DC Power Supply Input				
	Fuse			Fuse Holder	
	Type	Rated Short Circuit Braking Current (kA)	Qty.	Type	Qty.
4A0002	CR6L-20	100	2	CMS-4	2
4A0004	CR6L-30				
4A0005	CR6L-50				
4A0007					
4A0009					
4A0011					
4A0018	CR6L-75		2	CMS-5	2
4A0023					
4A0031	CR6L-100				
4A0038	CR6L-150				
4A0044					
4A0058	CR6L-200		2	<1>	
4A0072	CR6L-250				
4A0088					
4A0103	CR6L-300				
4A0139	CR6L-350				
4A0165	CR6L-400				
4A0208	CS5F-600	200			
4A0250					
4A0296					
4A0362	CS5F-800				
4A0414					
4A0515	CS5F-1200				
4A0675	CS5F-1500				
4A0930	CS5F-1200		4		
4A1200	CS5F-1500				

<1> Manufacturer does not recommend a specific fuse holder for this fuse. Contact Yaskawa or your nearest sales representative for fuse dimensions.

■ Guarding Against Harmful Materials

When installing IP00/Open Type enclosure drives, use an enclosure that prevents foreign material from entering the drive from above or below.

◆ EMC Guidelines Compliance

This drive is tested according to European standards EN 61800-3:2004+A1:2012.

■ EMC Filter Installation

The following conditions must be met to ensure continued compliance with guidelines. *Refer to EMC Filters on page 745* for EMC filter selection.

Installation Method

Verify the following installation conditions to ensure that other devices and machinery used in combination with this drive also comply with EMC guidelines.

1. Install an EMC noise filter to the input side specified by Yaskawa for compliance with European standards.
2. Place the drive and EMC noise filter in the same enclosure.
3. Use braided shield cable for the drive and motor wiring, or run the wiring through a metal conduit.
4. Keep wiring as short as possible. Ground the shield on both the drive side and the motor side.

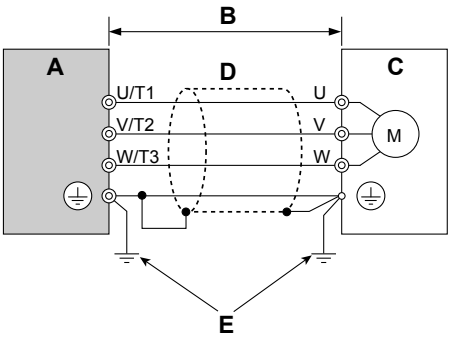

A – Drive
B – 10 m max cable length between drive and motor
C – Motor
D – Metal conduit
E – Ground wire should be as short as possible.

Figure D.3 Installation Method

5. Make sure the protective earthing conductor complies with technical standards and local safety regulations.

WARNING! *Electrical Shock Hazard. Because the leakage current exceeds 3.5 mA in models 4A0414 to 4A1200, IEC/EN 61800-5-1 states that either the power supply must be automatically disconnected in case of discontinuity of the protective earthing conductor, or a protective earthing conductor with a cross-section of at least 10 mm^2 (Cu) or 16 mm^2 (Al) must be used. Failure to comply may result in death or serious injury.*

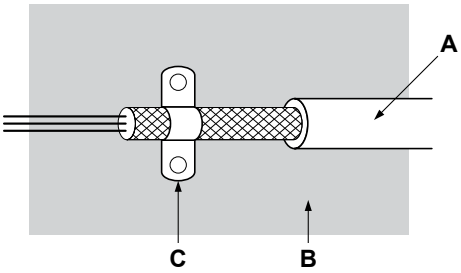

A – Braided shield cable
B – Metal panel
C – Cable clamp (conductive)

Figure D.4 Ground Area

6. Connect a DC link choke to minimize harmonic distortion.

Three-Phase 200 V / 400 V Class

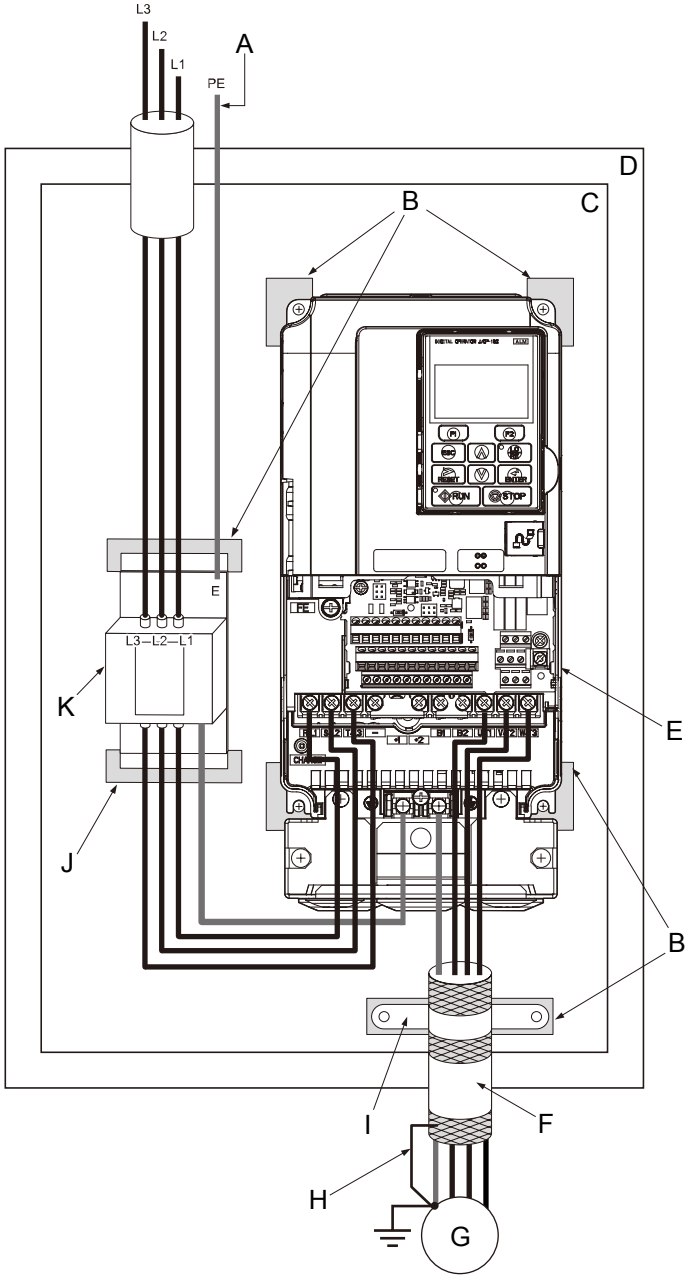

A – Make sure the ground wire is grounded
B – Grounding surface (remove any paint or sealant)
C – Metal plate
D – Enclosure panel
E – Drive
F – Motor cable (braided shield cable, max. 10 m)
G – Motor
H – Cable shield ground
I – Cable clamp
J – Ground plate (scrape off any visible paint)
K – EMC noise filter

Figure D.5 EMC Filter and Drive Installation for CE Compliance (Three-Phase 200 V / 400 V Class)

■ EMC Filters

Install the drive with the EMC filters listed in *Table D.4* to comply with the IEC/EN 61800-3 requirements.

Table D.4 IEC/EN 61800-3 Filters

Drive Model	Type Manufacturer: Schaffner	Rated Current (A)	Weight (lb)	Dimensions [W x D x H] (in)	Y x X (in)	Figure
Three-Phase 200 V Class						
2A0004	FS5972-10-07	10	2.6	5.6 × 1.8 × 13.0	4.5 × 12.3	1
2A0006						
2A0008						
2A0010	FS5972-18-07	18	2.9	5.6 × 1.8 × 13.0	4.5 × 12.3	
2A0012						
2A0018	FS5972-35-07	35	4.6	8.1 × 2.0 × 14.0	6.9 × 13.2	
2A0021						
2A0030						
2A0040	FS5972-60-07	60	8.8	9.3 × 2.6 × 16.1	8.1 × 15.4	
2A0056						
2A0069	FS5972-100-35	100	7.5	3.5 × 5.9 × 13.0	2.6 × 10.0	2
2A0081						
2A0110	FS5972-170-40	170	13.2	4.7 × 6.7 × 17.8	4.0 × 14.4	
2A0138						
2A0169	FS5972-250-37	250	25.8	5.1 × 9.5 × 24.0	3.5 × 19.6	
2A0211						
2A0250	FS5972-410-99	410	23.1	10.2 × 4.5 × 15.2	9.3 × 4.7	3
2A0312						
2A0360	FS5972-600-99	600	24.3	10.2 × 5.3 × 15.2	9.3 × 4.7	
2A0415						
Three-Phase 400 V Class						
4A0002	FS5972-10-07	10	2.7	5.6 × 1.8 × 13.0	4.5 × 12.3	1
4A0004						
4A0005						
4A0007						
4A0009	FS5972-18-07	18	2.9	5.6 × 1.8 × 13.0	4.5 × 12.3	
4A0011						
4A0018	FS5972-35-07	35	4.6	8.1 × 2.0 × 14.0	6.9 × 13.2	
4A0023						
4A0031						
4A0038	FS5972-60-07	60	8.8	9.3 × 2.6 × 16.1	8.0 × 15.4	
4A0044						
4A0058						
4A0072	FS5972-100-35	100	16.5	3.5 × 5.9 × 13.0	2.6 × 10.0	2
4A0088						
4A0103	FS5972-170-35	170	10.4	4.7 × 6.7 × 17.8	4.0 × 14.4	
4A0139						
4A0165						
4A0208	FS5972-250-37	250	25.8	5.1 × 9.5 × 24.0	3.5 × 19.6	

Drive Model	Type Manufacturer: Schaffner	Rated Current (A)	Weight (lb)	Dimensions [W x D x H] (in)	Y x X (in)	Figure
4A0250	FS5972-410-99	410	23.1	10.2 × 4.5 × 15.2	9.3 × 4.7	3
4A0296						
4A0362						
4A0414	FS5972-600-99	600	24.3	10.2 × 5.3 × 15.2	9.3 × 4.7	
4A0515						
4A0675	FS5972-800-99	800	69.4	11.8 × 6.3 × 28.2	10.8 × 8.3	
4A0930	FS5972-600-99 <1>	600	24.3	10.2 × 5.3 × 15.2	9.3 × 4.7	
4A1200	FS5972-800-99 <1>	800	69.4	11.8 × 28.2 × 6.3	10.8 × 8.3	4

<1> Connect two of the same filters in parallel.

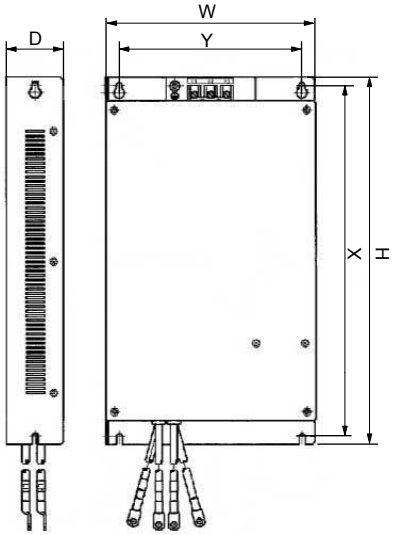

Figure 1

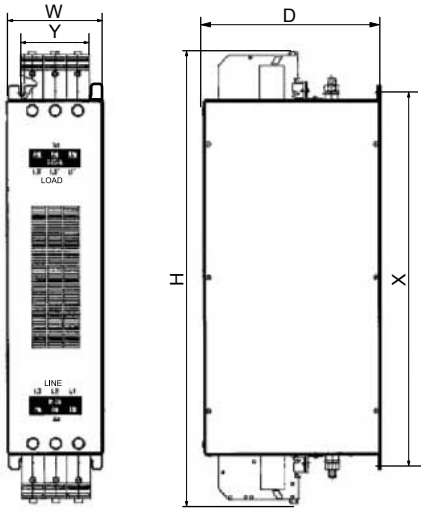

Figure 2

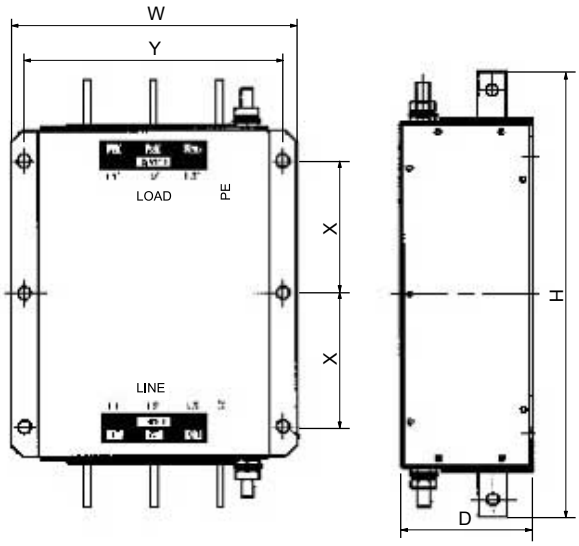

Figure 3

Figure D.6 EMC Filter Dimensions

■ DC Link Chokes for IEC/EN 61000-3-2 Compliance

Table D.5 DC Link Chokes for Harmonic Reduction

Drive Model	DC Link Chokes	
	Model	Rating
200 V Three-Phase Units		
2A0004	UZDA-B	5.4 A 8 mH
2A0006		
400 V Three-Phase Units		
4A0002	UZDA-B	3.2 A 28 mH
4A0004		

Note: DC link chokes are not required for other models to comply with EMC.

D.3 UL and CSA Standards

◆ UL Standards Compliance

The UL/cUL mark applies to products in the United States and Canada. It indicates that UL has performed product testing and evaluation, and determined that their stringent standards for product safety have been met. For a product to receive UL certification, all components inside that product must also receive UL certification.

Figure D.7 UL/cUL Mark

This drive is tested in accordance with UL standard UL508C and complies with UL requirements. The conditions described below must be met to maintain compliance when using this drive in combination with other equipment:

■ Installation Area

Do not install the drive to an area greater than pollution degree 2 (UL standard).

■ Ambient Temperature

IP00/Open Type Enclosure: -10 °C to +50 °C (14 °F to 122 °F)

IP20/UL Type 1 Enclosure: -10 to +40 °C (14 °F to 104 °F)

Finless Type: IP20/IP00 Enclosure: -10 to +45 °C (14 °F to 113 °F)

■ Main Circuit Terminal Wiring

Yaskawa recommends using closed-loop crimp terminals on all drive models. To maintain UL/cUL approval, UL Listed closed-loop crimp terminals are specifically required when wiring the drive main circuit terminals on models 2A0110 to 2A0415, 4A0058 to 4A0675, (4A1200 series-dependent), and 5A0041 to 5A0242. Use only the tools recommended by the terminal manufacturer for crimping. ***Refer to Closed-Loop Crimp Terminal Recommendations on page 756*** for closed-loop crimp terminal recommendations.

The wire gauges listed in the following tables are Yaskawa recommendations. Refer to local codes for proper wire gauge selections.

Wire Gauges and Tightening Torques

Table D.6 Wire Gauge and Torque Specifications (Three-Phase 200 V Class)

Drive Model	Terminal	Recomm. Gauge AWG, kcmil	Wire Range AWG, kcmil	Screw Size	Tightening Torque N·m (lb.in.)
2A0004 2A0006 2A0008 2A0010	R/L1, S/L2, T/L3	14	14 to 10	M4	1.2 to 1.5 (10.6 to 13.3)
	U/T1, V/T2, W/T3	14	14 to 10		
	⊖, ⊕1, ⊕2	–	14 to 10		
	B1, B2	–	14 to 10		
	⏚	10 <1>	14 to 10		
2A0012	R/L1, S/L2, T/L3	12	14 to 10	M4	1.2 to 1.5 (10.6 to 13.3)
	U/T1, V/T2, W/T3	14	14 to 10		
	⊖, ⊕1, ⊕2	–	14 to 10		
	B1, B2	–	14 to 10		
	⏚	10 <1>	14 to 10		

Drive Model	Terminal	Recomm. Gauge AWG, kcmil	Wire Range AWG, kcmil	Screw Size	Tightening Torque N·m (lb.in.)
2A0018	R/L1, S/L2, T/L3	10	12 to 10	M4	1.2 to 1.5 (10.6 to 13.3)
	U/T1, V/T2, W/T3	10	14 to 10		
	⊖, ⊕1, ⊕2	–	14 to 10		
	B1, B2	–	14 to 10		
	⏚	10 <1>	14 to 10		
2A0021	R/L1, S/L2, T/L3	10	12 to 10	M4	1.2 to 1.5 (10.6 to 13.3)
	U/T1, V/T2, W/T3	10	12 to 10		
	⊖, ⊕1, ⊕2	–	12 to 10		
	B1, B2	–	14 to 10		
	⏚	10 <1>	12 to 10		
2A0030	R/L1, S/L2, T/L3	8	10 to 6	M4	2.1 to 2.3 (18.6 to 20.4)
	U/T1, V/T2, W/T3	8	10 to 6		
	⊖, ⊕1, ⊕2	–	10 to 6		
	B1, B2	–	14 to 10		
	⏚	8 <2>	10 to 8	M5	2.0 to 2.5 (17.7 to 22.1)
2A0040	R/L1, S/L2, T/L3	6	8 to 6	M4	2.1 to 2.3 (18.6 to 20.4)
	U/T1, V/T2, W/T3	8	8 to 6		
	⊖, ⊕1, ⊕2	–	6		
	B1, B2	–	12 to 10		
	⏚	8 <2>	10 to 8	M5	2.0 to 2.5 (17.7 to 22.1)
2A0056	R/L1, S/L2, T/L3	4	6 to 4	M6	5.4 to 6.0 (47.8 to 53.1)
	U/T1, V/T2, W/T3	4	6 to 4		
	⊖, ⊕1, ⊕2	–	6 to 4		
	B1, B2	–	10 to 6	M5	2.7 to 3.0 (23.9 to 26.6)
	⏚	6	8 to 6	M6	5.4 to 6.0 (47.8 to 53.1)
2A0069	R/L1, S/L2, T/L3	3	4 to 3	M8	9.9 to 11.0 (87.6 to 97.4)
	U/T1, V/T2, W/T3	3	4 to 3		
	⊖, ⊕1, ⊕2	–	4 to 3		
	B1, B2	–	8 to 6	M5	2.7 to 3.0 (23.9 to 26.6)
	⏚	6	6 to 4	M6	5.4 to 6.0 (47.8 to 53.1)
2A0081	R/L1, S/L2, T/L3	2	3 to 2	M8	9.9 to 11.0 (87.6 to 97.4)
	U/T1, V/T2, W/T3	2	3 to 2		
	⊖, ⊕1, ⊕2	–	3 to 2		
	B1, B2	–	6	M5	2.7 to 3.0 (23.9 to 26.6)
	⏚	6	6 to 4	M6	5.4 to 6.0 (47.8 to 53.1)
2A0110	R/L1, S/L2, T/L3	1/0	3 to 1/0	M8	9 to 11 (79.7 to 97.4)
	U/T1, V/T2, W/T3	1/0	3 to 1/0		
	⊖, ⊕1	–	2 to 1/0		
	B1, B2	–	6 to 1/0		
	⏚	6	6 to 4		
2A0138	R/L1, S/L2, T/L3	2/0	1 to 2/0	M10	18 to 23 (159 to 204)
	U/T1, V/T2, W/T3	2/0	1 to 2/0		
	⊖, ⊕1	–	1/0 to 3/0		
	B1, B2	–	4 to 2/0		
	⏚	4	4	M8	9 to 11 (79.7 to 97.4)

Drive Model	Terminal	Recomm. Gauge AWG, kcmil	Wire Range AWG, kcmil	Screw Size	Tightening Torque N·m (lb.in.)
2A0169	R/L1, S/L2, T/L3	4/0	2/0 to 4/0	M10	18 to 23 (159 to 204)
	U/T1, V/T2, W/T3	4/0	3/0 to 4/0		
	⊖, ⊕1	–	1 to 4/0		
	⊕3	–	1/0 to 4/0		
	⏚	4	4 to 2		
2A0211	R/L1, S/L2, T/L3	1/0 × 2P	1/0 to 2/0	M10	18 to 23 (159 to 204)
	U/T1, V/T2, W/T3	1/0 × 2P	1/0 to 2/0		
	⊖, ⊕1	–	1 to 4/0		
	⊕3	–	1/0 to 4/0		
	⏚	4	4 to 1/0		
2A0250	R/L1, S/L2, T/L3	3/0 × 2P	3/0 to 300	M12	32 to 40 (283 to 354)
	U/T1, V/T2, W/T3	3/0 × 2P	3/0 to 300		
	⊖, ⊕1	–	3/0 to 300		
	⊕3	–	2 to 300	M10	18 to 23 (159 to 204)
	⏚	3	3 to 300	M12	32 to 40 (283 to 354)
2A0312	R/L1, S/L2, T/L3	4/0 × 2P	3/0 to 300	M12	32 to 40 (283 to 354)
	U/T1, V/T2, W/T3	3/0 × 2P	3/0 to 300		
	⊖, ⊕1	–	3/0 to 300		
	⊕3	–	3/0 to 300	M10	18 to 23 (159 to 204)
	⏚	2	2 to 300	M12	32 to 40 (283 to 354)
2A0360	R/L1, S/L2, T/L3	250 × 2P	4/0 to 600	M12	32 to 40 (283 to 354)
	U/T1, V/T2, W/T3	4/0 × 2P	4/0 to 600		
	⊖, ⊕1	–	250 to 600		
	⊕3	–	3/0 to 600	M10	18 to 23 (159 to 204)
	⏚	1	1 to 350	M12	32 to 40 (283 to 354)
2A0415	R/L1, S/L2, T/L3	350 × 2P	250 to 600	M12	32 to 40 (283 to 354)
	U/T1, V/T2, W/T3	300 × 2P	300 to 600		
	⊖, ⊕1	–	300 to 600		
	⊕3	–	3/0 to 600	M10	18 to 23 (159 to 204)
	⏚	1	1 to 350	M12	32 to 40 (283 to 354)

<1> Install a GFCI when using this wire gauge in accordance with IEC/EN 61800-5-1.

<2> Install a GFCI, or use 10 mm^2 (AWG 8) copper wire when using this wire gauge in accordance with IEC/EN 61800-5-1.

Table D.7 Wire Gauge and Torque Specifications (Three-Phase 400 V Class)

Drive Model	Terminal	Recomm. Gauge AWG, kcmil	Wire Range AWG, kcmil	Screw Size	Tightening Torque N·m (lb.in.)
4A0002 4A0004	R/L1, S/L2, T/L3	14	14 to 10	M4	1.2 to 1.5 (10.6 to 13.3)
	U/T1, V/T2, W/T3	14	14 to 10		
	⊖, ⊕1, ⊕2	–	14 to 10		
	B1, B2	–	14 to 10		
	⏚	12 <1>	14 to 12		
4A0005 4A0007 4A0009	R/L1, S/L2, T/L3	14	14 to 10	M4	1.2 to 1.5 (10.6 to 13.3)
	U/T1, V/T2, W/T3	14	14 to 10		
	⊖, ⊕1, ⊕2	–	14 to 10		
	B1, B2	–	14 to 10		
	⏚	10 <1>	14 to 10		
4A0011	R/L1, S/L2, T/L3	12	14 to 10	M4	1.2 to 1.5 (10.6 to 13.3)
	U/T1, V/T2, W/T3	14	14 to 10		
	⊖, ⊕1, ⊕2	–	14 to 10		
	B1, B2	–	14 to 10		
	⏚	10 <1>	14 to 10		
4A0018	R/L1, S/L2, T/L3	10	12 to 6	M4	2.1 to 2.3 (18.6 to 20.4)
	U/T1, V/T2, W/T3	10	12 to 6		
	⊖, ⊕1, ⊕2	–	12 to 6		
	B1, B2	–	12 to 10		
	⏚	10 <1>	14 to 10	M5	2.0 to 2.5 (17.7 to 22.1)
4A0023	R/L1, S/L2, T/L3	10	10 to 6	M4	2.1 to 2.3 (18.6 to 20.4)
	U/T1, V/T2, W/T3	10	10 to 6		
	⊖, ⊕1, ⊕2	–	12 to 6		
	B1, B2	–	12 to 10		
	⏚	10 <1>	12 to 10	M5	2.0 to 2.5 (17.7 to 22.1)
4A0031	R/L1, S/L2, T/L3	8	8 to 6	M5	3.6 to 4.0 (31.8 to 35.4)
	U/T1, V/T2, W/T3	8	10 to 6		
	⊖, ⊕1, ⊕2	–	10 to 6		
	B1, B2	–	10 to 8		2.7 to 3.0 (23.9 to 26.6)
	⏚	8 <2>	10 to 8	M6	5.4 to 6.0 (47.8 to 53.1)
4A0038	R/L1, S/L2, T/L3	6	8 to 6	M5	3.6 to 4.0 (31.8 to 35.4)
	U/T1, V/T2, W/T3	8	8 to 6		
	⊖, ⊕1, ⊕2	–	6		
	B1, B2	–	10 to 8		2.7 to 3.0 (23.9 to 26.6)
	⏚	6	10 to 6	M6	5.4 to 6.0 (47.8 to 53.1)
4A0044	R/L1, S/L2, T/L3	6	6 to 4	M6	5.4 to 6.0 (47.8 to 53.1)
	U/T1, V/T2, W/T3	6	6 to 4		
	⊖, ⊕1, ⊕2	–	6 to 4		
	B1, B2	–	10 to 8	M5	2.7 to 3.0 (23.9 to 26.6)
	⏚	6	8 to 6	M6	5.4 to 6.0 (47.8 to 53.1)

Drive Model	Terminal	Recomm. Gauge AWG, kcmil	Wire Range AWG, kcmil	Screw Size	Tightening Torque N·m (lb.in.)
4A0058	R/L1, S/L2, T/L3	4	6 to 4	M8	9 to 11 (79.7 to 97.4)
	U/T1, V/T2, W/T3	4	6 to 4		
	⊖, ⊕1	–	6 to 1		
	B1, B2	–	8 to 4		
	⏚	6	8 to 6		
4A0072	R/L1, S/L2, T/L3	3	4 to 3	M8	9 to 11 (79.7 to 97.4)
	U/T1, V/T2, W/T3	3	4 to 3		
	⊖, ⊕1	–	4 to 1		
	B1, B2	–	6 to 3		
	⏚	6	6		
4A0088	R/L1, S/L2, T/L3	2	3 to 1/0	M8	9 to 11 (79.7 to 97.4)
	U/T1, V/T2, W/T3	2	3 to 1/0		
	⊖, ⊕1	–	3 to 1/0		
	⊕3	–	6 to 1/0		
	⏚	4	6 to 4		
4A0103	R/L1, S/L2, T/L3	1/0	2 to 1/0	M8	9 to 11 (79.7 to 97.4)
	U/T1, V/T2, W/T3	1	2 to 1/0		
	⊖, ⊕1	–	3 to 1/0		
	⊕3	–	4 to 1/0		
	⏚	4	6 to 4		
4A0139	R/L1, S/L2, T/L3	3/0	1/0 to 4/0	M10	18 to 23 (159 to 204)
	U/T1, V/T2, W/T3	2/0	1/0 to 4/0		
	⊖, ⊕1	–	1/0 to 4/0		
	⊕3	–	3 to 4/0		
	⏚	4	4		
4A0165	R/L1, S/L2, T/L3	4/0	3/0 to 4/0	M10	18 to 23 (159 to 204)
	U/T1, V/T2, W/T3	4/0	3/0 to 4/0		
	⊖, ⊕1	–	1 to 4/0		
	⊕3	–	1/0 to 4/0		
	⏚	4	4 to 2		
4A0208	R/L1, S/L2, T/L3	300	2 to 300	M10	18 to 23 (159 to 204)
	U/T1, V/T2, W/T3	300	2 to 300		
	⊖, ⊕1	–	1 to 250		
	⊕3	–	3 to 3/0		
	⏚	4	4 to 300		
4A0250	R/L1, S/L2, T/L3	400	1 to 600	M10	18 to 23 (159 to 204)
	U/T1, V/T2, W/T3	400	1/0 to 600		
	⊖, ⊕1	–	3/0 to 600		
	⊕3	–	1 to 325		
	⏚	2	2 to 350		
4A0296	R/L1, S/L2, T/L3	500	2/0 to 600	M12	32 to 40 (283 to 354)
	U/T1, V/T2, W/T3	500	2/0 to 600		
	⊖, ⊕1	–	3/0 to 600		
	⊕3	–	1 to 325	M10	18 to 23 (159 to 204)
	⏚	2	2 to 350	M12	32 to 40 (283 to 354)

Drive Model	Terminal	Recomm. Gauge AWG, kcmil	Wire Range AWG, kcmil	Screw Size	Tightening Torque N·m (lb.in.)
4A0362	R/L1, S/L2, T/L3	4/0 × 2P	3/0 to 600	M12	32 to 40 (283 to 354)
	U/T1, V/T2, W/T3	4/0 × 2P	3/0 to 600		
	⊖, ⊕1	–	4/0 to 600		
	⊕3	–	3/0 to 600	M10	18 to 23 (159 to 204)
	⏚	1	1 to 350	M12	32 to 40 (283 to 354)
4A0414	R/L1, S/L2, T/L3	300 × 2P	4/0 to 300	M12	32 to 40 (283 to 354)
	U/T1, V/T2, W/T3	300 × 2P	4/0 to 300		
	⊖, ⊕1	–	3/0 to 300		
	⊕3	–	3/0 to 300		
	⏚	1	1 to 3/0		
4A0515	R/L1, S/L2, T/L3	3/0 × 4P	3/0 to 300	M12	32 to 40 (283 to 354)
	U/T1, V/T2, W/T3	4/0 × 4P	3/0 to 300		
	⊖, ⊕1	–	1/0 to 300		
	⊕3	–	1/0 to 300		
	⏚	1/0	1/0 to 300		
4A0675	R/L1, S/L2, T/L3	300 × 4P	4/0 to 300	M12	32 to 40 (283 to 354)
	U/T1, V/T2, W/T3	300 × 4P	4/0 to 300		
	⊖, ⊕1	–	1/0 to 300		
	⊕3	–	1/0 to 300		
	⏚	2/0	2/0 to 300		
4A0930	R/L1, S/L2, T/L3, R1/L11, S1/L21, T1/L31	4/0 × 4P×2	3/0 to 300	M12	32 to 40 (283 to 354)
	U/T1, V/T2, W/T3	4/0 × 4P×2	3/0 to 300		
	⊖, ⊕1	–	4/0 to 300		
	⊕3	–	4/0 to 300		
	⏚	3/0	3/0 to 250		
4A1200	R/L1, S/L2, T/L3, R1/L11, S1/L21, T1/L31	300 × 4P×2	4/0 to 300	M12	32 to 40 (283 to 354)
	U/T1, V/T2, W/T3	300 × 4P×2	4/0 to 300		
	⊖, ⊕1	–	250 to 300		
	⊕3	–	4/0 to 300		
	⏚	4/0	4/0 to 250		

<1> Install a GFCI when using this wire gauge in accordance with IEC/EN 61800-5-1.

<2> Install a GFCI or use 10 mm ^{2} (AWG 8) copper wire when using this wire gauge in accordance with IEC/EN 61800-5-1.

Table D.8 Wire Gauge and Torque Specifications (Three-Phase 600 V Class)

Drive Model	Terminal	Recomm. Gauge mm² (AWG, kcmil)	Wire Range mm² (AWG, kcmil)	Screw Size	Tightening Torque N·m (lb.in.)
5A0003 5A0004 5A0006	R/L1, S/L2, T/L3	2.5 (14)	2.5 to 6.0 (14 to 10)	M4	1.2 to 1.5 (10.6 to 13.3)
	U/T1, V/T2, W/T3	2.5 (14)	2.5 to 6.0 (14 to 10)		
	⊖, ⊕1, ⊕2	–	2.5 to 6.0 (14 to 10)		
	B1, B2	–	2.5 to 6.0 (14 to 10)		
	⏚	6.0 (10)	2.5 to 6.0 (14 to 10)		
5A0009	R/L1, S/L2, T/L3	2.5 (14)	2.5 to 6.0 (14 to 10)	M4	1.2 to 1.5 (10.6 to 13.3)
	U/T1, V/T2, W/T3	2.5 (14)	2.5 to 6.0 (14 to 10)		
	⊖, ⊕1, ⊕2	–	2.5 to 6.0 (14 to 10)		
	B1, B2	–	2.5 to 6.0 (14 to 10)		
	⏚	6.0 (10)	4.0 to 6.0 (12 to 10)		
5A0011	R/L1, S/L2, T/L3	6.0 (10)	2.5 to 16 (14 to 6)	M4	2.1 to 2.3 (18.6 to 20.4)
	U/T1, V/T2, W/T3	2.5 (14)	2.5 to 16 (14 to 6)		
	⊖, ⊕1, ⊕2	–	2.5 to 16 (14 to 6)		
	B1, B2	–	2.5 to 6.0 (14 to 10)		
	⏚	10 (8)	4.0 to 6.0 (12 to 8)	M5	2.0 to 2.5 (17.7 to 22.1)
5A0017	R/L1, S/L2, T/L3	6.0 (10)	6.0 to 16 (10 to 6)	M5	3.6 to 4.0 (31.8 to 35.4)
	U/T1, V/T2, W/T3	6.0 (10)	6.0 to 16 (10 to 6)		
	⊖, ⊕1, ⊕2	–	6.0 to 16 (10 to 6)		
	B1, B2	–	6.0 to 10 (10 to 8)		2.7 to 3.0 (23.9 to 26.6)
	⏚	10 (8)	6.0 to 10 (12 to 8)	M6	5.4 to 6.0 (47.8 to 53.1)
5A0022	R/L1, S/L2, T/L3	10 (8)	6.0 to 16 (10 to 6)	M5	3.6 to 4.0 (31.8 to 35.4)
	U/T1, V/T2, W/T3	6.0 (10)	6.0 to 16 (10 to 6)		
	⊖, ⊕1, ⊕2	–	6.0 to 16 (10 to 6)		
	B1, B2	–	6.0 to 10 (10 to 8)		2.7 to 3.0 (23.9 to 26.6)
	⏚	10 (8)	6.0 to 10 (10 to 6)	M6	5.4 to 6.0 (47.8 to 53.1)
5A0027 5A0032	R/L1, S/L2, T/L3	16 (6)	16 to 25 (6 to 4)	M6	5.4 to 6.0 (47.8 to 53.1)
	U/T1, V/T2, W/T3	16 (6)	16 to 25 (6 to 4)		
	⊖, ⊕1, ⊕2	–	16 to 25 (6 to 4)		
	B1, B2	–	6.0 to 10 (10 to 8)	M5	2.7 to 3.0 (23.9 to 26.6)
	⏚	16 (6)	10 to 16 (10 to 6)	M6	5.4 to 6.0 (47.8 to 53.1)

Drive Model	Terminal	Recomm. Gauge mm² (AWG, kcmil)	Wire Range mm² (AWG, kcmil)	Screw Size	Tightening Torque N·m (lb.in.)
5A0041	R/L1, S/L2, T/L3	16 (6)	6.0 to 25 (10 to 3)	M8	9.0 to 11 (79.7 to 97.4)
	U/T1, V/T2, W/T3	16 (6)	6.0 to 25 (10 to 3)		
	⊖, ⊕1	–	(6 to 1)		
	B1, B2	–	4.0 to 25 (12 to 3)		
	⏚	16 (6)	10 to 16 (6)		
5A0052	R/L1, S/L2, T/L3	25 (4)	6.0 to 25 (10 to 3)	M8	9.0 to 11 (79.7 to 97.4)
	U/T1, V/T2, W/T3	16 (6)	6.0 to 25 (10 to 3)		
	⊖, ⊕1	–	16 to 35 (6 to 1)		
	B1, B2	–	10 to 25 (8 to 3)		
	⏚	16 (6)	10 to 16 (6)		
5A0062	R/L1, S/L2, T/L3	25 (4)	6.0 to 95 (10 to 4/0)	M10	18 to 23 (159 to 204)
	U/T1, V/T2, W/T3	25 (4)	6.0 to 95 (10 to 4/0)		
	⊖, ⊕1	–	25 to 95 (4 to 4/0)		
	⊕3	–	16 to 95 (6 to 4/0)		
	⏚	25 (4)	25 (4)		
5A0077	R/L1, S/L2, T/L3	25 (3)	6.0 to 95 (10 to 4/0)	M10	18 to 23 (159 to 204)
	U/T1, V/T2, W/T3	25 (3)	6.0 to 95 (10 to 4/0)		
	⊖, ⊕1	–	25 to 95 (3 to 4/0)		
	⊕3	–	16 to 95 (6 to 4/0)		
	⏚	25 (4)	25 (4)		
5A0099	R/L1, S/L2, T/L3	70 (1/0)	6.0 to 95 (10 to 4/0)	M10	18 to 23 (159 to 204)
	U/T1, V/T2, W/T3	50 (1)	6.0 to 95 (10 to 4/0)		
	⊖, ⊕1	–	35 to 95 (2 to 4/0)		
	⊕3	–	25 to 95 (4 to 4/0)		
	⏚	25 (4)	25 (4)		
5A0125	R/L1, S/L2, T/L3	70 (2/0)	35 to 150 (1 to 300)	M10	18 to 23 (159 to 204)
	U/T1, V/T2, W/T3	70 (2/0)	35 to 150 (1 to 300)		
	⊖, ⊕1	–	70 (2/0 to 3/0)		
	⊕3	–	35 to 50 (1 to 1/0)		
	⏚	35 (3)	35 to 150 (3 to 300)		

Drive Model	Terminal	Recomm. Gauge mm² (AWG, kcmil)	Wire Range mm² (AWG, kcmil)	Screw Size	Tightening Torque N·m (lb.in.)
5A0145	R/L1, S/L2, T/L3	95 (3/0)	95 to 150 (2/0 to 300)	M10	18 to 23 (159 to 204)
	U/T1, V/T2, W/T3	95 (3/0)	95 to 150 (2/0 to 300)		
	⊖, ⊕1	–	70 to 95 (3/0 to 4/0)		
	⊕3	–	70 to 95 (1/0 to 2/0)		
	⏚	35 (3)	35 to 150 (3 to 300)		
5A0192	R/L1, S/L2, T/L3	185 (300)	95 to 300 (2/0 to 600)	M12	32 to 40 (283 to 354)
	U/T1, V/T2, W/T3	150 (250)	95 to 300 (2/0 to 600)		
	⊖, ⊕1	–	95 to 185 (2/0 to 400)		
	⊕3	–	95 to 120 (2/0 to 250)	M10	18 to 23 (159 to 204)
	⏚	50 (1)	35 to 300 (1 to 350)	M12	32 to 40 (283 to 354)
5A0242	R/L1, S/L2, T/L3	240 (400)	95 to 300 (2/0 to 600)	M12	32 to 40 (283 to 354)
	U/T1, V/T2, W/T3	185 (350)	95 to 300 (2/0 to 600)		
	⊖, ⊕1	–	95 to 240 (2/0 to 500)		
	⊕3	–	150 (250 to 300)	M10	18 to 23 (159 to 204)
	⏚	50 (1)	35 to 300 (1 to 350)	M12	32 to 40 (283 to 354)

Closed-Loop Crimp Terminal Recommendations

To maintain UL/cUL approval, UL Listed closed-loop crimp terminals are specifically required when wiring the drive main circuit terminals on models 2A0110 to 2A0415, 4A0058 to 4A1200, and 5A0041 to 5A0242. Use only the tools recommended by the terminal manufacturer for crimping. Yaskawa recommends UL Listed crimp terminals made by JST and Tokyo DIP (or equivalent) for the insulation cap. *Table D.9* matches the wire gauges and terminal screw sizes with Yaskawa-recommended crimp terminals, tools, and insulation caps. Refer to the appropriate Wire Gauge and Torque Specifications table for the wire gauge and screw size for your drive model. Place orders with a Yaskawa representative or the Yaskawa sales department.

Wire gauge values shown in ***bold italic*** are the recommended values. Refer to local codes for proper selections.

Table D.9 Closed-Loop Crimp Terminal Size

Drive Model	Wire Gauge (AWG, kcmil)		Screw Size	Crimp Terminal Model Number	Tool		Insulation Cap Model No.	Code <1>
	R/L1, S/L2, T/L3	U/T1, V/T2, W/T3			Machine No.	Die Jaw		
200 V Class								
2A0004 2A0006 2A0008 2A0010	***14***		M4	R2-4	YA-4	AD-900	TP-003	100-054-028
	12			R5.5-4			TP-005	100-054-029
	10							
2A0012	14	***14***	M4	R2-4	YA-4	AD-900	TP-003	100-054-028
	12	12		R5.5-4			TP-005	100-054-029
	10							
2A0018	–	14	M4	R2-4	YA-4	AD-900	TP-003	100-054-028
	12			R5.5-4			TP-005	100-054-029
	10							
2A0021	12		M4	R5.5-4	YA-4	AD-900	TP-005	100-054-029
	10							

Drive Model	Wire Gauge (AWG, kcmil)		Screw Size	Crimp Terminal Model Number	Tool		Insulation Cap Model No.	Code <1>
	R/L1, S/L2, T/L3	U/T1, V/T2, W/T3			Machine No.	Die Jaw		
2A0030	10		M4	R5.5-4	YA-4	AD-900	TP-005	100-054-029
	8			8-4		AD-901	TP-008	100-054-031
	6			14-NK4		AD-902	TP-014	100-054-033
2A0040	8	***8***	M4	8-4	YA-4	AD-901	TP-008	100-054-031
	6	6		14-NK4		AD-902	TP-014	100-054-033
2A0056	6		M6	R14-6	YA-5	AD-952	TP-014	100-051-261
	4			R22-6		AD-953	TP-022	100-051-262
2A0069	4		M8	R22-8	YA-5	AD-953	TP-022	100-051-263
	3			R38-8		AD-954	TP-038	100-051-264
2A0081	3		M8	R38-8	YA-5	AD-954	TP-038	100-051-264
	2							
2A0110	3		M8	R38-8	YA-5	AD-954	TP-038	100-051-264
	2							
	1							
	1/0			R60-8	YA-5	AD-955	TP-060	100-051-265
2A0138	1		M10	R38-10	YF-1 YET-300-1	TD-321, TD-311	TP-060	100-061-114
	1/0			R60-10				100-051-266
	2/0			70-10		TD-323, TD-312	TP-080	100-054-036
2A0169	2/0	–	M10	70-10	YF-1 YET-300-1	TD-323, TD-312	TP-080	100-054-036
	3/0			80-10				100-051-267
	4/0			R100-10		TD-324, TD-312	TP-100	100-051-269
2A0211	***1/0 × 2P***		M10	R60-10	YF-1 YET-300-1	TD-321, TD-311	TP-060	100-051-266
	2/0 × 2P			70-10		TD-323, TD-312	TP-080	100-054-036
2A0250	***3/0 × 2P***		M12	80-L12	YF-1 YET-300-1	TD-323, TD-312	TP-080	100-051-558
	4/0 × 2P			100-L12		TD-324, TD-312	TP-100	100-051-560
	–	250 × 2P		150-L12		TD-325, TD-313	TP-150	100-051-562
	250	–		R150-12			TP-150	100-051-273
	300							
2A0312	3/0 × 2P	***3/0 × 2P***	M12	80-L12	YF-1 YET-300-1	TD-323, TD-312	TP-080	100-051-558
	4/0 × 2P	4/0 × 2P		100-L12		TD-324, TD-312	TP-100	100-051-560
	250 × 2P			150-L12		TD-325, TD-313	TP-150	100-051-562
	300 × 2P							
2A0360	4/0 × 2P	***4/0 × 2P***	M12	100-L12	YF-1 YET-300-1	TD-324, TD-312	TP-100	100-051-560
	250 × 2P	250 × 2P		150-L12		TD-325, TD-313	TP-150	100-051-562
	300 × 2P							
	350 × 2P			180-L12		TD-327, TD-314	TP-200	100-066-688
	400 × 2P			200-L12				100-051-564
	500 × 2P			325-12		TD-328, TD-315	TP-325	100-051-277
	600	600 × 2P						

Drive Model	Wire Gauge (AWG, kcmil)		Screw Size	Crimp Terminal Model Number	Tool		Insulation Cap Model No.	Code <1>
	R/L1, S/L2, T/L3	U/T1, V/T2, W/T3			Machine No.	Die Jaw		
2A0415	250 × 2P	–	M12	150-L12	YF-1 YET-300-1	TD-325, TD-313	TP-150	100-051-562
	300 × 2P	***300 × 2P***						
	350 × 2P	350 × 2P		180-L12		TD-327, TD-314	TP-200	100-066-688
	400 × 2P			200-L12				100-051-564
	500 × 2P			325-12		TD-328, TD-315	TP-325	100-051-277
	600 × 2P							
400 V Class								
4A0002 4A0004 4A0005 4A0007 4A0009	***14***		M4	R2-4	YA-4	AD-900	TP-003	100-054-028
	12			R5.5-4			TP-005	100-054-029
	10							
4A0011	14	***14***	M4	R2-4	YA-4	AD-900	TP-003	100-054-028
	12	12		R5.5-4			TP-005	100-054-029
	10							
4A0018	12		M4	R5.5-4	YA-4	AD-900	TP-005	100-054-029
	10							
	8			8-4		AD-901	TP-008	100-054-031
	6			14-NK4		AD-902	TP-014	100-054-033
4A0023	**10**		M4	R5.5-4	YA-4	AD-900	TP-005	100-054-029
	8			8-4		AD-901	TP-008	100-054-031
	6			14-NK4		AD-902	TP-014	100-054-033
4A0031	–	10	M5	R5.5-5	YA-4	AD-900	TP-005	100-054-030
	8			R8-5		AD-901	TP-008	100-054-032
	6			R14-5		AD-902	TP-014	100-054-034
4A0038	8	***8***	M5	R8-5	YA-4	AD-901	TP-008	100-054-032
	6	6		R14-5		AD-902	TP-014	100-054-034
4A0044	***6***		M6	R14-6	YA-5	AD-952	TP-014	100-051-261
	4			R22-6		AD-953	TP-022	100-051-262
4A0058	6		M8	R14-8	YA-5	AD-952	TP-014	100-054-035
	4			R22-8		AD-953	TP-022	100-051-263
4A0072	4		M8	R22-8	YA-5	AD-953	TP-022	100-051-263
	3			R38-8		AD-954	TP-038	100-051-264
4A0088	3		M8	R38-8	YA-5	AD-954	TP-038	100-051-264
	2							
	1							
	1/0			R60-8		AD-955	TP-060	100-051-265
4A0103	2		M8	R38-8	YA-5	AD-954	TP-038	100-051-264
	1	***1***						
	1/0	1/0		R60-8		AD-955	TP-060	100-051-265
4A0139	1/0		M10	R60-10	YF-1 YET-300-1	TD-321, TD-311	TP-060	100-051-266
	2/0	***2/0***		70-10		TD-323, TD-312	TP-080	100-054-036
	3/0	3/0		80-10				100-051-267
	4/0			R100-10		TD-324, TD-312	TP-100	100-051-269
4A0165	3/0		M10	80-10	YF-1 YET-300-1	TD-323, TD-312	TP-080	100-051-267
	4/0			R100-10		TD-324, TD-312	TP-100	100-051-269

Drive Model	Wire Gauge (AWG, kcmil)		Screw Size	Crimp Terminal Model Number	Tool		Insulation Cap Model No.	Code <1>
	R/L1, S/L2, T/L3	U/T1, V/T2, W/T3			Machine No.	Die Jaw		
4A0208	2 × 2P		M10	38-L10	YF-1 YET-150-1	TD-224, TD-212	TP-038	100-051-556
	1 × 2P							
	3/0 × 2P			80-L10		TD-227, TD-214	TP-080	100-051-557
	4/0			R100-10		TD-228, TD-214	TP-100	100-051-269
	250			R150-10		TD-229, TD-215	TP-150	100-051-272
	300							
4A0250	1 × 2P	–	M10	38-L10	YF-1 YET-150-1	TD-224, TD-212	TP-038	100-051-556
	3/0 × 2P			80-L10		TD-227, TD-214	TP-080	100-051-557
	4/0 × 2P			100-L10		TD-228, TD-214	TP-100	100-051-559
	250 × 2P			150-L10		TD-229, TD-215	TP-150	100-051-561
	300			R150-10			TP-150	100-051-272
	350			180-10	YF-1 YET-300-1	TD-327, TD-314	TP-200	100-066-687
	400			200-10				100-051-563
	500			325-10		TD-328, TD-315	TP-325	100-051-565
	600							
4A0296	3/0 × 2P		M12	80-L12	YF-1 YET-300-1	TD-323, TD-312	TP-080	100-051-558
	4/0 × 2P			100-L12		TD-324, TD-312	TP-100	100-051-560
	250 × 2P			150-L12		TD-325, TD-313	TP-150	100-051-562
	300 × 2P							
	–	350 × 2P		180-L12		TD-327, TD-314	TP-200	100-066-688
	350	–		180-12				100-066-689
	400			R200-12				100-051-275
	500			325-12		TD-328, TD-315	TP-325	100-051-277
	600							
4A0362	3/0 × 2P		M12	80-L12	YF-1 YET-300-1	TD-323, TD-312	TP-080	100-051-558
	4/0 × 2P			100-L12		TD-324, TD-312	TP-100	100-051-560
	250 × 2P			150-L12		TD-325, TD-313	TP-150	100-051-562
	300 × 2P							
	350 × 2P			180-L12		TD-327, TD-314	TP-200	100-066-688
	400 × 2P			200-L12				100-051-564
	500			325-12		TD-328, TD-315	TP-325	100-051-277
	600							
4A0414	4/0 × 2P		M12	100-L12	YF-1 YET-300-1	TD-324, TD-312	TP-100	100-051-560
	250 × 2P			150-L12		TD-325, TD-313	TP-150	100-051-562
	300 × 2P							
4A0515	***3/0 × 4P***	3/0 × 4P	M12	80-L12	YF-1 YET-300-1	TD-323, TD-312	TP-080	100-051-558
	4/0 × 4P	***4/0 × 4P***		100-L12		TD-324, TD-312	TP-100	100-051-560
	250 × 4P			150-L12		TD-325, TD-313	TP-150	100-051-562
	300 × 2P							

Drive Model	Wire Gauge (AWG, kcmil)		Screw Size	Crimp Terminal Model Number	Tool		Insulation Cap Model No.	Code <1>
	R/L1, S/L2, T/L3	U/T1, V/T2, W/T3			Machine No.	Die Jaw		
4A0675	4/0 × 4P		M12	100-L12	YF-1 YET-300-1	TD-324, TD-312	TP-100	100-051-560
	250 × 4P			150-L12		TD-325, TD-313	TP-150	100-051-562
	300 × 4P							
4A0930	3/0 × 8P		M12	80-L12	YF-1 YET-300-1	TD-323, TD-312	TP-080	100-051-558
	4/0 × 8P			100-L12		TD-324, TD-312	TP-100	100-051-560
	250 × 8P			150-L12		TD-325, TD-313	TP-150	100-051-562
	300 × 8P							
4A1200	4/0 × 8P		M12	100-L12	YF-1 YET-300-1	TD-324, TD-312	TP-100	100-051-560
	250 × 8P			150-L12		TD-325, TD-313	TP-150	100-051-562
	300 × 8P							

<1> Codes refer to a set of three crimp terminals and three insulation caps. Prepare input and output wiring using two sets for each connection.
Example 1: Models with 300 kcmil for both input and output require one set for input terminals and one set for output terminals, so the user should order two sets of [100-051-272].
Example 2: Models with 4/0 AWG × 2P for both input and output require two sets for input terminals and two sets for output terminals, so the user should order four sets of [100-051-560].

Note: Use crimp insulated terminals or insulated shrink tubing for wiring connections. Wires should have a continuous maximum allowable temperature of 75 °C 600 Vac UL-approved vinyl-sheathed insulation.

Factory Recommended Branch Circuit Protection for UL Compliance

NOTICE: *If a fuse is blown or a Ground Fault Circuit Interrupter (GFCI) is tripped, check the wiring and the selection of the peripheral devices to identify the cause. Contact Yaskawa before restarting the drive or the peripheral devices if the cause cannot be identified.*

Yaskawa recommends installing one of the following types of branch circuit protection to maintain compliance with UL508C. Semiconductor protective type fuses are preferred. Alternate branch circuit protection devices are also listed in the tables below.

Table D.10 Factory Recommended Drive Branch Circuit Protection (Normal Duty)

Drive Model	Normal Duty					
	Nominal Output Power HP	AC Drive Input Amps	MCCB Rating Amps <1>	Time Delay Fuse Rating Amps <2>	Non-time Delay Fuse Rating Amps <3>	Bussmann Semi-conductor Fuse Rating (Fuse Ampere) <4>
200 V Class						
2A0004	0.75	3.9	15	6.25	10	FWH-70B (70)
2A0006	1 - 1.5	7.3	15	12	20	FWH-70B (70)
2A0008	2	8.8	15	15	25	FWH-70B (70)
2A0010	3	10.8	20	17.5	30	FWH-70B (70)
2A0012	3	13.9	25	20	40	FWH-70B (70)
2A0018	5	18.5	35	30	50	FWH-90B (90)
2A0021	7.5	24	45	40	70	FWH-90B (90)
2A0030	10	37	60	60	110	FWH-100B (100)
2A0040	15	52	100	90	150	FWH-200B (200)
2A0056	20	68	125	110	200	FWH-200B (200)
2A0069	25	80	150	125	225	FWH-200B (200)
2A0081	30	96	175	150	275	FWH-300A (300)
2A0110	40	111	200	175	300	FWH-300A (300)
2A0138	50	136	250	225	400	FWH-350A (350)
2A0169	60	164	300	250	450	FWH-400A (400)
2A0211	75	200	400	350	600	FWH-400A (400)
2A0250	100	271	500	450	800	FWH-600A (600)

Drive Model	Normal Duty					
	Nominal Output Power HP	AC Drive Input Amps	MCCB Rating Amps <1>	Time Delay Fuse Rating Amps <2>	Non-time Delay Fuse Rating Amps <3>	Bussmann Semi-conductor Fuse Rating (Fuse Ampere) <4>
2A0312	125	324	600	500	800	FWH-700A (700)
2A0360	150	394	700	600	1000 <5>	FWH-800A (800)
2A0415	175	471	900	800	1400 <5>	FWH-1000A (1000)
400 V Class						
4A0002	1	2.1	15	3.5	6	FWH-40B (40)
4A0004	2	4.3	15	7.5	12	FWH-50B (50)
4A0005	3	5.9	15	10	17.5	FWH-70B (70)
4A0007	3	8.1	15	12	20	FWH-70B (70)
4A0009	5	9.4	15	15	25	FWH-90B (90)
4A0011	7.5	14	25	20	40	FWH-90B (90)
4A0018	10	20	40	35	60	FWH-80B (80)
4A0023	15	24	45	40	70	FWH-100B (100)
4A0031	20	38	75	60	110	FWH-125B (125)
4A0038	25	44	75	75	125	FWH-200B (200)
4A0044	30	52	100	90	150	FWH-250A (250)
4A0058	40	58	100	100	150	FWH-250A (250)
4A0072	50	71	125	110	200	FWH-250A (250)
4A0088	60	86	150	150	250	FWH-250A (250)
4A0103	75	105	200	175	300	FWH-250A (250)
4A0139	100	142	250	225	400	FWH-350A (350)
4A0165	125	170	300	250	500	FWH-400A (400)
4A0208	150	207	400	350	600	FWH-500A (500)
4A0250	200	248	450	400	700	FWH-600A (600)
4A0296	250	300	600	500	800	FWH-700A (700)
4A0362	300	346	600	600	1000 <5>	FWH-800A (800)
4A0414	350	410	800	700	1200 <5>	FWH-800A (800)
4A0515	400 - 450	465	900	800	1350 <5>	FWH-1000A (1000)
4A0675	500 - 600	657	1200	1100 <5>	1800 <5>	FWH-1200A (1200)
4A0930	700 - 800	922	Not Applicable			FWH-1200A (1200)
4A1200	900 - 1000	1158				FWH-1600A (1600)
600 V Class						
5A0003	2	3.6	15	6.25	10	FWP-50B (50)
5A0004	3	5.1	15	8	15	FWP-50B (50)
5A0006	5	8.3	15	12	20	FWP-60B (60)
5A0009	7.5	12	20	20	35	FWP-60B (60)
5A0011	10	16	30	25	45	FWP-70B (70)
5A0017	15	23	40	40	60	FWP-100B (100)
5A0022	20	31	60	50	90	FWP-100B (100)
5A0027	25	38	75	60	110	FWP-125A (125)
5A0032	30	45	75	75	125	FWP-125A (125)
5A0041	40	44	75	75	125	FWP-175A (175)
5A0052	50	54	100	90	150	FWP-175A (175)
5A0062	60	66	125	110	175	FWP-250A (250)
5A0077	75	80	150	125	225	FWP-250A (250)
5A0099	100	108	175	175	300	FWP-250A (250)
5A0125	125	129	225	225	350	FWP-350A (350)

Drive Model	Normal Duty					
	Nominal Output Power HP	AC Drive Input Amps	MCCB Rating Amps <1>	Time Delay Fuse Rating Amps <2>	Non-time Delay Fuse Rating Amps <3>	Bussmann Semi-conductor Fuse Rating (Fuse Ampere) <4>
5A0145	150	158	300	275	450	FWP-350A (350)
5A0192	200	228	400	350	600	FWP-600A (600)
5A0242	250	263	500	450	700	FWP-600A (600)

<1> Maximum MCCB Rating is 15 A, or 200 % of drive input current rating, whichever is larger. MCCB voltage rating must be 600 VAC or greater.

<2> Maximum Time Delay fuse is 175% of drive input current rating. This covers any Class CC, J or T class fuse.

<3> Maximum Non-time Delay fuse is 300% of drive input current rating. This covers any CC, J or T class fuse.

<4> When using semiconductor fuses, Bussman FWH and FWP are required for UL compliance. Select FWH for 200 V Class and 400 V Class models and FWP fuses for 600 V models.

<5> Class L fuse is also approved for this rating.

Table D.11 Factory Recommended Drive Branch Circuit Protection (Heavy Duty)

Drive Model	Heavy Duty					
	Nominal Output Power HP	AC Drive Input Amps	MCCB Rating Amps <1>	Time Delay Fuse Rating Amps <2>	Non-time Delay Fuse Rating Amps <3>	Bussmann Semi-conductor Fuse Rating (Fuse Ampere) <4>
200 V Class						
2A0004	0.75	2.9	15	5	8	FWH-70B (70)
2A0006	1	5.8	15	10	15	FWH-70B (70)
2A0008	2	7	15	12	17.5	FWH-70B (70)
2A0010	2	7.5	15	12	20	FWH-70B (70)
2A0012	3	11	20	17.5	30	FWH-70B (70)
2A0018	3	15.6	25	25	40	FWH-90B (90)
2A0021	5	18.9	35	30	50	FWH-90B (90)
2A0030	7.5	28	50	40	75	FWH-100B (100)
2A0040	10	37	60	60	100	FWH-200B (200)
2A0056	15	52	100	90	150	FWH-200B (200)
2A0069	20	68	125	110	200	FWH-200B (200)
2A0081	25	80	150	125	225	FWH-300A (300)
2A0110	30	82	150	125	225	FWH-300A (300)
2A0138	40	111	200	175	250	FWH-350A (350)
2A0169	50	136	250	225	350	FWH-400A (400)
2A0211	60	164	300	250	450	FWH-400A (400)
2A0250	75	200	400	350	600	FWH-600A (600)
2A0312	100	271	500	450	800	FWH-700A (700)
2A0360	125	324	600	500	900 <4>	FWH-800A (800)
2A0415	150	394	700	600	1100 <4>	FWH-1000A (1000)
400 V Class						
4A0002	0.75	1.8	15	3	5	FWH-40B (40)
4A0004	1 - 2	3.2	15	5	9	FWH-50B (50)
4A0005	3	4.4	15	7	12	FWH-70B (70)
4A0007	3	6	15	10	17.5	FWH-70B (70)
4A0009	5	8.2	15	12	20	FWH-90B (90)
4A0011	5	10.4	20	17.5	30	FWH-90B (90)
4A0018	7.5 - 10	15	30	25	40	FWH-80B (80)
4A0023	10	20	40	35	60	FWH-100B (100)
4A0031	15	29	50	50	80	FWH-125B (125)
4A0038	20	39	75	60	110	FWH-200B (200)

Drive Model	Heavy Duty					
	Nominal Output Power HP	AC Drive Input Amps	MCCB Rating Amps <1>	Time Delay Fuse Rating Amps <2>	Non-time Delay Fuse Rating Amps <3>	Bussmann Semi-conductor Fuse Rating (Fuse Ampere) <4>
4A0044	25 - 30	47	75	75	125	FWH-250A (250)
4A0058	30	43	75	75	125	FWH-250A (250)
4A0072	40	58	100	100	150	FWH-250A (250)
4A0088	60	71	125	110	200	FWH-250A (250)
4A0103	60	86	150	150	250	FWH-250A (250)
4A0139	75	105	175	175	300	FWH-350A (350)
4A0165	100	142	225	225	400	FWH-400A (400)
4A0208	125 - 150	170	250	250	500	FWH-500A (500)
4A0250	150	207	350	350	600	FWH-600A (600)
4A0296	200	248	400	400	700	FWH-700A (700)
4A0362	250	300	500	500	800	FWH-800A (800)
4A0414	300	346	600	600	1000 <4>	FWH-800A (800)
4A0515	350	410	700	700	1200 <4>	FWH-1000A (1000)
4A0675	400 - 500	584	1000	1000 <4>	1600 <4>	FWH-1200A (1200)
4A0930	600 - 700	830	Not Applicable			FWH-1200A (1200)
4A1200	800 - 900	1031				FWH-1600A (1600)
600 V Class						
5A0003	1	1.9	15	3	5	FWP-50B (50)
5A0004	2	3.6	15	6.25	10	FWP-50B (50)
5A0006	3	5.1	15	8	15	FWP-60B (60)
5A0009	5	8.3	15	12	20	FWP-60B (60)
5A0011	7.5	12	20	20	35	FWP-70B (70)
5A0017	10	16	30	25	45	FWP-100B (100)
5A0022	15	23	40	40	60	FWP-100B (100)
5A0027	20	31	60	50	90	FWP-125A (125)
5A0032	25	38	75	60	100	FWP-125A (125)
5A0041	30	33	60	50	90	FWP-175A (175)
5A0052	40	44	75	75	125	FWP-175A (175)
5A0062	50	54	100	90	150	FWP-250A (250)
5A0077	60	66	125	110	175	FWP-250A (250)
5A0099	75	80	150	125	225	FWP-250A (250)
5A0125	100	108	175	175	300	FWP-350A (350)
5A0145	125	129	250	225	350	FWP-350A (350)
5A0192	150	158	300	250	400	FWP-600A (600)
5A0242	200	228	400	350	600	FWP-600A (600)

<1> Maximum MCCB Rating is 15 A, or 200 % of drive input current rating, whichever is larger. MCCB voltage rating must be 600 VAC or greater.

<2> Maximum Time Delay fuse is 175% of drive input current rating. This covers any Class CC, J or T class fuse.

<3> Maximum Non-time Delay fuse is 300% of drive input current rating. This covers any CC, J or T class fuse.

<4> Class L fuse is also approved for this rating.

Wiring Fuses for Models 4A0930 and 4A1200

NOTICE: *If a fuse is blown or an Ground Fault Circuit Interrupter (GFCI) is tripped, check the wiring and the selection of peripheral devices to identify the cause. Contact Yaskawa before restarting the drive or the peripheral devices if the cause cannot be identified.*

Install a fuse on the input side to protect drive wiring and prevent other secondary damage. Wire the fuse so that leakage current in the upper controller power supply will trigger the fuse and shut off the power supply.

Select the appropriate fuse from ***Table 3.2***.

Table D.12 Input Fuses for Models 4A0930 and 4A1200

Voltage Class	Model	Selection			Input Fuse (Example)			
		Input Voltage	Current	Pre-arc I^2t (A^2s)	Model	Manufacturer	Rating	Pre-arc I^2t (A^2s)
Three-Phase 400 V Class	4A0930	480 V	1500 A	140000 to 3100000	CS5F-1200	Fuji Electric	AC500 V, 1200 A	276000
	4A0930 with 12-pulse rectification				FWH-1200A	Bussman	AC500 V, 1200 A	–
					FWH-1000A	Bussman	AC500 V, 1000 A	–
	4A1200	480 V	1500 A	320000 to 3100000	CS5F-1500	Fuji Electric	AC500 V, 1500 A	351000
	4A1200 with 12-pulse rectification				FWH-1600A	Bussman	AC500 V, 1600 A	–
					FWH-1200A	Bussman	AC500 V, 1200 A	–

■ Low Voltage Wiring for Control Circuit Terminals

Wire low voltage wires with NEC Class 1 circuit conductors. Refer to national state or local codes for wiring. The external power supply shall be a UL Listed Class 2 power supply source or equivalent only.

Table D.13 Control Circuit Terminal Power Supply

Input / Output	Terminal Signal	Power Supply Specifications
Open Collector Outputs	P1, P2, PC, DM+, DM-	Requires class 2 power supply
Digital inputs	S1 to S8, SC, HC, H1, H2	Use the internal LVLC power supply of the drive. Use class 2 for external power supply.
Analog inputs / outputs	+V, -V, A1, A2, A3, AC, AM, FM	Use the internal LVLC power supply of the drive. Use class 2 for external power supply.

■ Drive Short Circuit Rating

The drive is suitable for use on a circuit capable of delivering not more than 100,000 RMS symmetrical Amperes, 240 Vac maximum (200 V Class), 480 Vac maximum (400 V Class), and 600 Vac maximum (600 V Class) when protected by Bussmann Type FWH or FWP fuses as specified in *Factory Recommended Branch Circuit Protection* on page *738*.

◆ CSA Standards Compliance

Figure D.8 CSA Mark

■ CSA for Industrial Control Equipment

The drive is CSA-certified as Industrial Control Equipment Class 3211.

Specifically, the drive is certified to: CAN/CSA C22.2 No. 04-04 and CAN/CSA C22.2 No.14-05.

◆ Drive Motor Overload Protection

Set parameter E2-01 (motor rated current) to the appropriate value to enable motor overload protection. The internal motor overload protection is UL Listed and in accordance with the NEC and CEC.

■ E2-01: Motor Rated Current

Setting Range: Model-dependent

Default Setting: Model-dependent

Parameter E2-01 protects the motor when parameter L1-01 is not set to 0. The default for L1-01 is 1, which enables protection for standard induction motors.

If Auto-Tuning has been performed successfully, the motor data entered to T1-04 is automatically written to parameter E2-01. If Auto-Tuning has not been performed, manually enter the correct motor rated current to parameter E2-01.

■ L1-01: Motor Overload Protection Selection

The drive has an electronic overload protection function (oL1) based on time, output current, and output frequency that protects the motor from overheating. The electronic thermal overload function is UL-recognized, so it does not require an external thermal relay for single motor operation.

This parameter selects the motor overload curve used according to the type of motor applied.

Table D.14 Overload Protection Settings

Setting	Description	
0	Disabled	Disabled the internal motor overload protection of the drive.
1	Standard fan-cooled motor (default)	Selects protection characteristics for a standard self-cooled motor with limited cooling capabilities when running below the rated speed. The motor overload detection level (oL1) is automatically reduced when running below the motor rated speed.
2	Drive duty motor with a speed range of 1:10	Selects protection characteristics for a motor with self-cooling capability within a speed range of 10:1. The motor overload detection level (oL1) is automatically reduced when running below 1/10 of the motor rated speed.
3	Vector motor with a speed range of 1:100	Selects protection characteristics for a motor capable of cooling itself at any speed including zero speed (externally cooled motor). The motor overload detection level (oL1) is constant over the entire speed range.
4	Permanent Magnet motor with variable torque	Selects protection characteristics for a variable torque PM motor. The motor overload detection level (oL1) is automatically reduced when running below the motor rated speed.
5	Permanent Magnet motor with constant torque	Selects protection characteristics for a constant torque PM motor. The motor overload detection level (oL1) is constant over the whole speed range.
6	Standard fan-cooled motor (50 Hz)	Selects protection characteristics for a standard self-cooled motor with limited cooling capabilities when running below the rated speed. The motor overload detection level (oL1) is automatically reduced when running below the motor rated speed.

When connecting the drive to more than one motor for simultaneous operation, disable the electronic overload protection (L1-01 = 0) and wire each motor with its own motor thermal overload relay.

Enable motor overload protection (L1-01 = 1 to 6) when connecting the drive to a single motor, unless another motor overload preventing device is installed. The drive electronic thermal overload function causes an oL1 fault, which shuts off the output of the drive and prevents additional overheating of the motor. The motor temperature is continually calculated while the drive is powered up.

■ L1-02: Motor Overload Protection Time

Setting Range: 0.1 to 5.0 min

Factory Default: 1.0 min

Parameter L1-02 determines how long the motor is allowed to operate before the oL1 fault occurs when the drive is running a hot motor at 60 Hz and at 150% of the full load amp rating (E2-01) of the motor. Adjusting the value of L1-02 can shift the set of oL1 curves up the y axis of the diagram below, but will not change the shape of the curves.

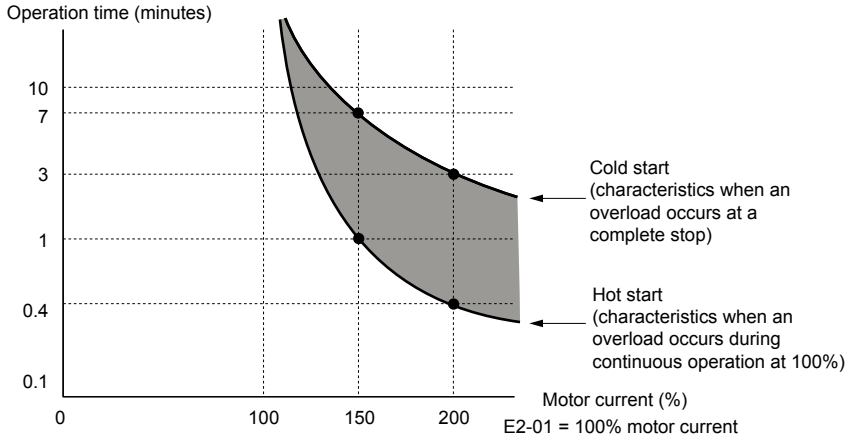

Figure D.9 Motor Overload Protection Time

◆ Precautionary Notes on External Heatsink (IP00/Open Type Enclosure)

When using an external heatsink, UL compliance requires covering exposed capacitors in the main circuit to prevent injury to surrounding personnel.

The portion of the external heatsink that projects out can be protected with the enclosure or with the appropriate capacitor cover after completing drive installation. Use *Table D.15* to match drive models with available capacitor covers. Order capacitor covers from a Yaskawa representative or directly from the Yaskawa sales department.

Table D.15 Capacitor Cover

Drive Model	Code Number	Figure
2A0110	100-061-273	*Figure D.10*
2A0138	100-061-274	
2A0169	100-061-275	
2A0211		
2A0250	100-061-277	
2A0312		
2A0360	100-061-278	
2A0415		
4A0058	100-061-273	
4A0072	100-061-274	
4A0088	100-061-276	
4A0103		
4A0139	100-061-275	
4A0165		
4A0208	100-061-277	
4A0250	100-061-278	
4A0296		
4A0362		
4A0414	100-061-279	
4A0515	100-061-280	
4A0675		
4A0930	100-061-281 <1>	*Figure D.11*
4A1200		
5A0041	100-061-274	*Figure D.10*
5A0052		
5A0062	100-061-275	
5A0077		
5A0099		
5A0125	100-061-277	
5A0145		
5A0192	100-061-278	
5A0242		

<1> Requires two sets.

Note: Model 4A1200 is UL compliant when the air entering the drive-installed panel or cabinet is 45 °C or cooler. For more information, contact your nearest Yaskawa representative or our sales office.

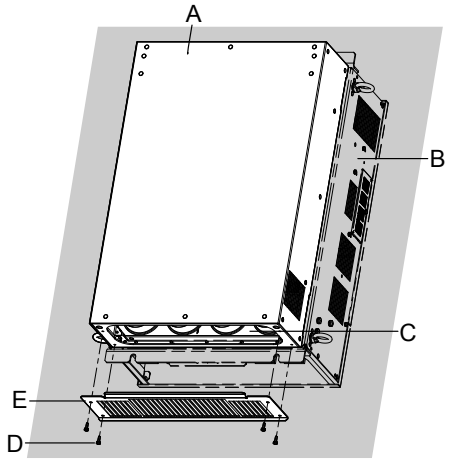

A – Drive (outside panel)
B – Drive (inside panel)
C – Opening to capacitors
D – Installation screws
E – Capacitor cover

Figure D.10 Capacitor Cover

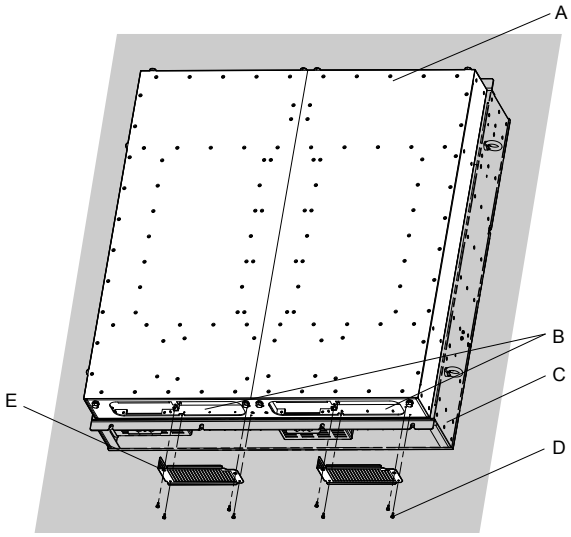

A – Drive (outside panel)
B – Opening to capacitors
C – Drive (inside panel)
D – Installation screws
E – Capacitor cover

Figure D.11 Capacitor Cover (Models 4A0930, 4A1200)

D.4 Safe Disable Input Function

◆ Specifications

Inputs/Outputs		Two Safe Disable inputs and one EDM output according to ISO/EN 13849-1 Cat. 3 PLd, IEC/EN 61508 SIL2.
Operation Time		Time from input open to drive output stop is less than 1 ms.
Failure Probability	**Demand Rate Low**	PFD = $5.15E^{-5}$
	Demand Rate High/ Continuous	PFH = $1.2E^{-9}$
Performance Level		The Safe Disable inputs satisfy all requirements of Performance Level (PL) d according to ISO/EN 13849-1 (DC from EDM considered).

◆ Precautions

DANGER! *Sudden Movement Hazard. Improper use of the Safe Disable function can result in serious injury or even death. Make sure the whole system or machinery in which the Safe Disable function is used complies with safety requirements. When implementing the Safe Disable function into the safety system of a machine, perform a thorough risk assessment for the entire system to assure compliance with relevant safety norms.*

DANGER! *Sudden Movement Hazard. When using a PM motor, even if the drive output is shut off by the Safe Disable function, a breakdown of two output transistors can cause current to flow through the motor winding, resulting in a rotor movement for a maximum angle of 180 degrees (electrically). Make sure such a situation would have no effect on the safety of the application when using the Safe Disable function.*

DANGER! *Sudden Movement Hazard. The Safe Disable function can switch off the drive output, but does not cut the drive power supply and cannot electrically isolate the drive output from the input. Always shut off the drive power supply when performing maintenance or installations on the drive input side as well as the drive output side.*

WARNING! *Sudden Movement Hazard. When using the Safe Disable inputs, make sure to remove the wire links between terminals H1, H2, and HC that were installed prior to shipment. Failing to do so will keep the Safe Disable circuit from operating properly and can cause injury or even death.*

NOTICE: *All safety features (including Safe Disable) should be inspected daily and periodically. If the system is not operating normally, there is a risk of serious personal injury.*

NOTICE: *Only a qualified technician with a thorough understanding of the drive, the instruction manual, and safety standards should be permitted to wire, inspect, and maintain the Safe Disable input.*

NOTICE: *From the moment terminal inputs H1 and H2 have opened, it takes up to 1 ms for drive output to shut off completely. The sequence set up to trigger terminals H1 and H2 should make sure that both terminals remain open for at least 1 ms in order to properly interrupt drive output.*

NOTICE: *The Safe Disable Monitor (output terminals DM+ and DM-) should not be used for any other purpose than to monitor the Safe Disable status or to discover a malfunction in the Safe Disable inputs. The monitor output is not considered a safe output.*

NOTICE: *When utilizing the Safe Disable function, an EMC filter must be used. Use only the EMC filters recommended in the drive Technical Manual.*

◆ Using the Safe Disable Function

The Safe Disable inputs provide a stop function in compliance with “Safe Torque Off” as defined in the IEC/EN 61800-5-2. Safe Disable inputs have been designed to meet the requirements of the ISO/EN 13849-1, Category 3 PLd, and IEC/EN 61508, SIL2. The PDS intended use shall be in the first environment (EM).

A Safe Disable Status Monitor for error detection in the safety circuit is also provided.

■ Safe Disable Circuit

The Safe Disable circuit consists of two independent input channels that can block the output transistors and provide a monitoring channel to indicate the status of those input channels.

The input can use the internal power supply of the drive or an external power supply and it will support Sink mode or Source mode. the mode selected for the digital input terminals S1 to S8 by switch S3 will also be used for the Safe Disable inputs. ***Refer to Sinking/Sourcing Mode for Digital Inputs on page 145*** for more information.

The Safe Disable Monitor uses a single channel photocoupler output. ***Refer to Output Terminals on page 140*** for signal specifications when using this output.

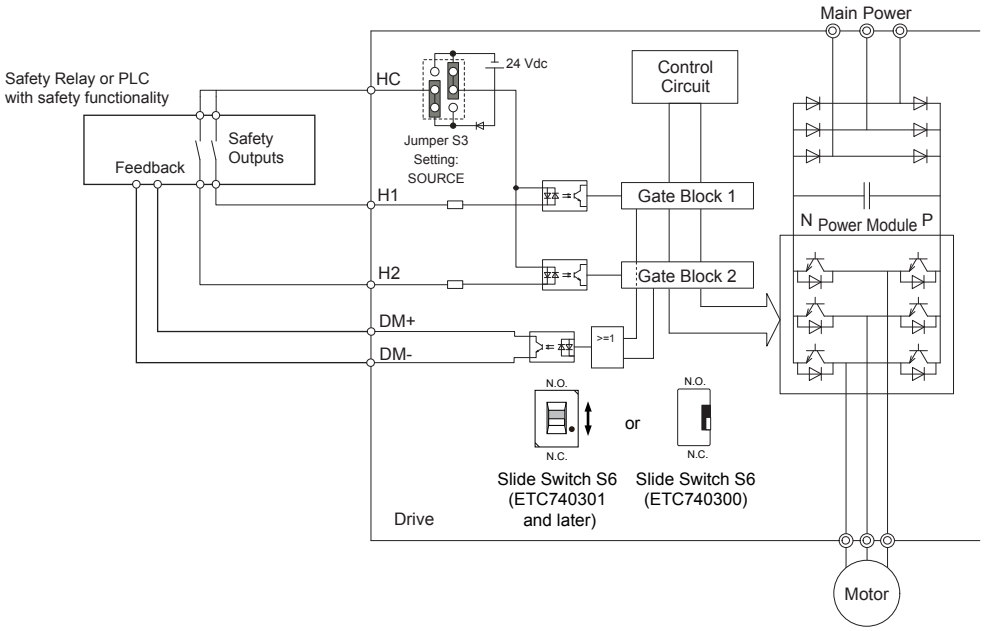

Figure D.12 Safe Disable Function Wiring Example (SINK Mode)

■ Disabling and Enabling the Drive Output ("Safe Torque Off")

Figure D.13 illustrates the Safe Disable input operation.

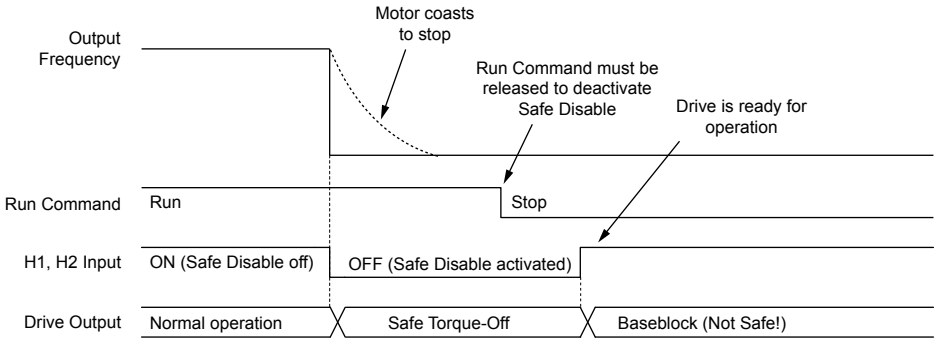

Figure D.13 Safe Disable Operation

Entering the "Safe Torque Off" State

Whenever either one Safe Disable input or both inputs open, the motor torque is shut off by switching off the drive output. If the motor was running before the Safe Disable inputs opened, then the motor will coast to stop, regardless of the stopping method set in parameter b1-03.

Notice that the "Safe Torque Off" state can only be achieved using the Safe Disable function. Removing the Run command stops the drive and shuts the output off (baseblock), but does not create a "Safe Torque Off" status.

Note: To avoid an uncontrolled stop during normal operation, make sure that the Safe Disable inputs are opened first when the motor has completely stopped.

Returning to Normal Operation after Safe Disable

The Safe Disable function can only be deactivated when a Run command is not active.

If Safe Disable was activated during stop, turn on both Safe Disable inputs by deactivating "Safe Torque Off" to resume normal operation.

If Safe Disable was activated during run, remove the Run command then turn on the Safe Disable inputs before restarting the drive.

■ Safe Disable Monitor Output Function and Digital Operator Display

Table D.16 explains the drive output and Safe Disable monitor state depending on the Safe Disable inputs.

Table D.16 Safety Input and EDM Terminal Status

Safe Disable Input Status		Safe Disable Status Monitor, DM+ DM-		Drive Output Status	Digital Operator Display
Input 1, H1-HC	Input 2, H2-HC	S6 Switch = "N.C."	S6 Switch = "N.O."		
OFF	**OFF**	OFF	ON	Safely disabled, "Safe Torque Off"	Hbb (flashes)
ON	**OFF**	ON	OFF	Safely disabled, "Safe Torque Off"	HbbF (flashes)
OFF	**ON**	ON	OFF	Safely disabled, "Safe Torque Off"	HbbF (flashes)
ON	**ON**	ON	OFF	Baseblock, ready for operation	Normal display

Safe Disable Status Monitor

Slide Switch S6 controls the polarity of this signal. Refer to ***Table D.16*** for functionality.

With the Safe Disable monitor output (terminals DM+ and DM-), the drive provides a safety status feedback signal. This signal should be read by the device that controls the Safe Disable inputs (PLC or a safety relay) in order to prohibit leaving the "Safe Torque Off" status in case the safety circuit malfunctions. Refer to the instruction manual of the safety device for details on this function.

Digital Operator Display

When both Safe Disable inputs are open, "Hbb" will flash in the digital operator display.

If one Safe Disable channel is on while the other is off, "HbbF" will flash in the display to indicate that there is a problem in the safety circuit or in the drive. This display should not appear under normal conditions if the Safe Disable circuit is utilized properly. ***Refer to Alarm Codes, Causes, and Possible Solutions on page 425*** to resolve possible errors.

Appendix: E

Quick Reference Sheet

This section provides tables to keep record of the drive specifications, motor specifications, and drive settings. Fill in the table data after commissioning the application and have them ready when contacting Yaskawa for technical assistance.

E.1 DRIVE AND MOTOR SPECIFICATIONS.....772
E.2 BASIC PARAMETER SETTINGS.....774
E.3 USER SETTING TABLE.....776

E.1 Drive and Motor Specifications

◆ Drive Specifications

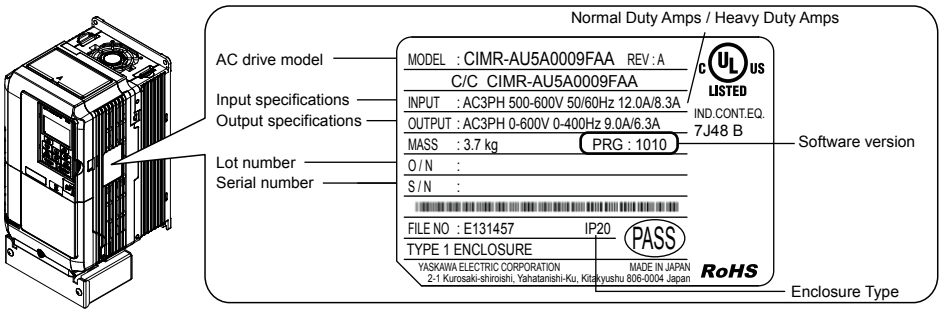

Items	Description
Model	CIMR-A
Serial Number	
Software Version (PRG)	
Options used	
Date of Usage	

◆ Motor Specifications

■ Induction Motor

Items	Description		Items	Description	
Manufacturer			**Motor Rated Current (T1-04)**		A
Model			**Motor Base Frequency (T1-05)**		Hz
Motor Rated Power (T1-02)		HP	**Number of Motor Poles (T1-06)**		
Motor Rated Voltage (T1-03)		V	**Motor Base Speed (T1-07)**		r/min

Note: These values must be entered as part of the Auto-Tuning process.

■ Permanent Magnet Motor

Items	Description		Items	Description	
Manufacturer			**Induction Voltage Constant**		mVs/rad
Model			**Induction Voltage Constant**		mV/(r/min)
PM Motor Rated Power (T2-04)		kW	**PM Motor Rated Current (T2-06)**		A
PM Motor Rated Voltage (T2-05)		V	**PM Motor Base Frequency (T2-07)**		Hz
q-Axis Inductance		mH	**Number of PM Motor Poles (T2-08)**		

Items	Description		Items	Description	
x-Axis Inductance		mH	**PM Motor Base Speed (T2-09)**		r/min

Note: These values must be entered as part of the Auto-Tuning process.

■ Motor Speed Encoder (if used)

Items	Description	Items	Description
Manufacturer		**Resolution**	
Interface			

E.2 Basic Parameter Settings

Use the following tables to keep records of important parameters. Have this data available when contacting Yaskawa technical support.

◆ Basic Setup

Item	Setting Value	Memo
Control Mode	A1-02 =	
Normal/Heavy Duty Selection	C6-01 =	
Frequency Reference Source	b1-01 =	
Run Command Source	b1-02 =	

◆ V/f Pattern Setup

Item	Setting Value	Memo
V/f Pattern Selection	E1-03 =	
Max. Output Frequency	E1-04 =	
Max. Voltage	E1-05 =	
Base Frequency	E1-06 =	
Mid. Output Frequency	E1-07 =	
Mid. Output Frequency Volt.	E1-08 =	
Min. Output Frequency	E1-09 =	
Min. Output Frequency Volt.	E1-10 =	

◆ Motor Setup

Motor Type	Item	Setting Value	Memo
Induction	**Motor Rated Current**	E2-01 =	
	Motor Rated Slip	E2-02 =	
	Motor No-Load Current	E2-03 =	
	No. of Motor Poles	E2-04 =	
	Line-to-Line Resistance	E2-05 =	
	Motor Leakage Inductance	E2-06 =	
Permanent Magnet	**Motor Code Selection**	E5-01 =	
	Motor Rated Power	E5-02 =	
	Motor Rated Current	E5-03 =	
	No. of Motor Poles	E5-04 =	
	Motor Stator Resistance	E5-05 =	
	Motor d-Axis Inductance	E5-06 =	
	Motor q-Axis Inductance	E5-07 =	
	Induction Volt. Const. 1	E5-09 =	
	Encoder Z-pulse Offset	E5-11 =	
	Induction Volt. Const. 2	E5-24 =	

◆ Multi-Function Digital Inputs

Terminal	Input Used	Setting Value and Function Name	Memo
S1		H1-01 =	
S2		H1-02 =	
S3		H1-03 =	
S4		H1-04 =	
S5		H1-05 =	
S6		H1-06 =	
S7		H1-07 =	
S8		H1-08 =	

◆ Pulse Train Input/Analog Inputs

Terminal	Input Used	Setting Value and Function Name	Memo
RP		H6-01 =	
A1		H3-02 =	
A2		H3-10 =	
A3		H3-06 =	

◆ Multi-Function Digital Outputs

Terminal	Output Used	Setting Value and Function Name	Memo
M1-M2		H2-01 =	
M3-M4		H2-02 =	
M5-M6		H2-03 =	

◆ Monitor Outputs

Terminal	Output Used	Setting Value and Function Name	Memo
FM		H4-01 =	
AM		H4-04 =	
MP		H6-06 =	

E.3 User Setting Table

Use the Verify Menu to determine which parameters have been changed from their original default settings

RUN below the parameter number indicates that the parameter setting can be changed during run.

Parameter names in **bold face type** are included in the Setup Group of parameters, which can be set by A1-06 = 0.

No.	Name	User Setting
A1-00 RUN	Language Selection	
A1-01 RUN	Access Level Selection	
A1-02	**Control Method Selection**	
A1-03	Initialize Parameters	
A1-04	Password	
A1-05	Password Setting	
A1-06	Application Preset	
A1-07	DriveWorksEZ Function Selection	
A2-01 to A2-32	User Parameters, 1 to 32	
A2-33	User Parameter Automatic Selection	
b1-01	**Frequency Reference Selection 1**	
b1-02	**Run Command Selection 1**	
b1-03	**Stopping Method Selection**	
b1-04	Reverse Operation Selection	
b1-05	Action Selection below Minimum Output Frequency	
b1-06	Digital Input Reading	
b1-07	LOCAL/REMOTE Run Selection	
b1-08	Run Command Selection while in Programming Mode	
b1-14	Phase Order Selection	
b1-15	Frequency Reference Selection 2	
b1-16	Run Command Selection 2	
b1-17	Run Command at Power Up	
b1-21 <1>	Start Condition Selection at Closed Loop Vector Control	
b2-01	DC Injection Braking Start Frequency	
b2-02	DC Injection Braking Current	
b2-03	DC Injection Braking Time at Start	
b2-04	DC Injection Braking Time at Stop	
b2-08	Magnetic Flux Compensation Value	
b2-12	Short Circuit Brake Time at Start	
b2-13	Short Circuit Brake Time at Stop	
b2-18	Short Circuit Braking Current	
b3-01	Speed Search Selection at Start	
b3-02	Speed Search Deactivation Current	
b3-03	Speed Search Deceleration Time	
b3-04	V/f Gain during Speed Search	

No.	Name	User Setting
b3-05	Speed Search Delay Time	
b3-06	Output Current 1 during Speed Search	
b3-07	Output Current 2 during Speed Search (Speed Estimation Type)	
b3-08	Current Control Gain during Speed Search (Speed Estimation Type)	
b3-09	Current Control Integral Time during Speed Search (Speed Estimation Type)	
b3-10	Speed Search Detection Compensation Gain	
b3-12	Minimum Current Detection Level during Speed Search	
b3-14	Bi-Directional Speed Search Selection	
b3-17	Speed Search Restart Current Level	
b3-18	Speed Search Restart Detection Time	
b3-19	Number of Speed Search Restarts	
b3-24	Speed Search Method Selection	
b3-25	Speed Search Wait Time	
b3-26	Direction Determining Level	
b3-27	Start Speed Search Select	
b3-29 <1>	Speed Search Induced Voltage Level	
b3-33	Speed Search Selection when Run Command is Given during Uv	
b4-01	Timer Function On-Delay Time	
b4-02	Timer Function Off-Delay Time	
b4-03 <1>	H2-01 ON Delay Time	
b4-04 <1>	H2-01 OFF Delay Time	
b4-05 <1>	H2-02 ON Delay Time	
b4-06 <1>	H2-03 OFF Delay Time	
b4-07 <1>	H2-03 ON Delay Time	
b4-08 <1>	H2-03 OFF Delay Time	
b5-01	PID Function Setting	
b5-02 RUN	Proportional Gain Setting (P)	
b5-03 RUN	Integral Time Setting (I)	
b5-04 RUN	Integral Limit Setting	
b5-05 RUN	Derivative Time (D)	
b5-06 RUN	PID Output Limit	

No.	Name	User Setting
b5-07 RUN	PID Offset Adjustment	
b5-08 RUN	PID Primary Delay Time Constant	
b5-09	PID Output Level Selection	
b5-10 RUN	PID Output Gain Setting	
b5-11	PID Output Reverse Selection	
b5-12	PID Feedback Loss Detection Selection	
b5-13	PID Feedback Loss Detection Level	
b5-14	PID Feedback Loss Detection Time	
b5-15	PID Sleep Function Start Level	
b5-16	PID Sleep Delay Time	
b5-17	PID Accel/Decel Time	
b5-18	PID Setpoint Selection	
b5-19 RUN	PID Setpoint Value	
b5-20	PID Setpoint Scaling	
b5-34 RUN	PID Output Lower Limit	
b5-35 RUN	PID Input Limit	
b5-36	PID Feedback High Detection Level	
b5-37	PID Feedback High Detection Time	
b5-38	PID Setpoint User Display	
b5-39	PID Setpoint Display Digits	
b5-40	Frequency Reference Monitor Content during PID	
b5-47	PID Output Reverse Selection 2	
b6-01	Dwell Reference at Start	
b6-02	Dwell Time at Start	
b6-03	Dwell Reference at Stop	
b6-04	Dwell Time at Stop	
b7-01 RUN	Droop Control Gain	
b7-02 RUN	Droop Control Delay Time	
b7-03	Droop Control Limit Selection	
b8-01	Energy Saving Control Selection	
b8-02 RUN	Energy Saving Gain	
b8-03 RUN	Energy Saving Control Filter Time Constant	
b8-04	Energy Saving Coefficient Value	
b8-05	Power Detection Filter Time	
b8-06	Search Operation Voltage Limit	

No.	Name	User Setting
b8-16	Energy Saving Parameter (Ki) for PM Motors	
b8-17	Energy Saving Parameter (Kt) for PM Motors	
b8-27 <I>	q-Axis Current Compensation Method when Output Voltage is Limited	
b9-01	Zero Servo Gain	
b9-02	Zero Servo Completion Width	
C1-01 RUN	**Acceleration Time 1**	
C1-02 RUN	**Deceleration Time 1**	
C1-03 RUN	Acceleration Time 2	
C1-04 RUN	Deceleration Time 2	
C1-05 RUN	Acceleration Time 3 (Motor 2 Accel Time 1)	
C1-06 RUN	Deceleration Time 3 (Motor 2 Decel Time 1)	
C1-07 RUN	Acceleration Time 4 (Motor 2 Accel Time 2)	
C1-08 RUN	Deceleration Time 4 (Motor 2 Decel Time 2)	
C1-09 RUN	Fast-Stop Time	
C1-10	Accel/Decel Time Setting Units	
C1-11	Accel/Decel Time Switching Frequency	
C2-01	S-Curve Characteristic at Accel Start	
C2-02	S-Curve Characteristic at Accel End	
C2-03	S-Curve Characteristic at Decel Start	
C2-04	S-Curve Characteristic at Decel End	
C3-01 RUN	Slip Compensation Gain	
C3-02 RUN	Slip Compensation Primary Delay Time	
C3-03	Slip Compensation Limit	
C3-04	Slip Compensation Selection during Regeneration	
C3-05	Output Voltage Limit Operation Selection	
C3-21 RUN	Motor 2 Slip Compensation Gain	
C3-22 RUN	Motor 2 Slip Compensation Primary Delay Time	
C3-23	Motor 2 Slip Compensation Limit	
C3-24	Motor 2 Slip Compensation Selection during Regeneration	
C4-01 RUN	Torque Compensation Gain	

No.	Name	User Setting
C4-02 RUN	Torque Compensation Primary Delay Time	
C4-03	Torque Compensation at Forward Start	
C4-04	Torque Compensation at Reverse Start	
C4-05	Torque Compensation Time Constant	
C4-06	Torque Compensation Primary Delay Time 2	
C4-07 RUN	Motor 2 Torque Compensation Gain	
C5-01 RUN	ASR Proportional Gain 1	
C5-02 RUN	ASR Integral Time 1	
C5-03 RUN	ASR Proportional Gain 2	
C5-04 RUN	ASR Integral Time 2	
C5-05	ASR Limit	
C5-06	ASR Primary Delay Time Constant	
C5-07	ASR Gain Switching Frequency	
C5-08	ASR Integral Limit	
C5-12	Integral Operation during Accel/Decel	
C5-17	Motor Inertia	
C5-18	Load Inertia Ratio	
C5-21 RUN	Motor 2 ASR Proportional Gain 1	
C5-22 RUN	Motor 2 ASR Integral Time 1	
C5-23 RUN	Motor 2 ASR Proportional Gain 2	
C5-24 RUN	Motor 2 ASR Integral Time 2	
C5-25	Motor 2 ASR Limit	
C5-26	Motor 2 ASR Primary Delay Time Constant	
C5-27	Motor 2 ASR Gain Switching Frequency	
C5-28	Motor 2 ASR Integral Limit	
C5-32	Integral Operation during Accel/Decel for Motor 2	
C5-37	Motor 2 Inertia	
C5-38	Motor 2 Load Inertia Ratio	
C5-39 <1>	ASR Primary Delay Time Constant 2	
C6-01	**Drive Duty Selection**	
C6-02	**Carrier Frequency Selection**	
C6-03	Carrier Frequency Upper Limit	
C6-04	Carrier Frequency Lower Limit	
C6-05	Carrier Frequency Proportional Gain	

No.	Name	User Setting
C6-09 <1>	Carrier Frequency during Rotational Auto-Tuning	
d1-01 RUN	**Frequency Reference 1**	
d1-02 RUN	**Frequency Reference 2**	
d1-03 RUN	**Frequency Reference 3**	
d1-04 RUN	**Frequency Reference 4**	
d1-05 RUN	Frequency Reference 5	
d1-06 RUN	Frequency Reference 6	
d1-07 RUN	Frequency Reference 7	
d1-08 RUN	Frequency Reference 8	
d1-09 RUN	Frequency Reference 9	
d1-10 RUN	Frequency Reference 10	
d1-11 RUN	Frequency Reference 11	
d1-12 RUN	Frequency Reference 12	
d1-13 RUN	Frequency Reference 13	
d1-14 RUN	Frequency Reference 14	
d1-15 RUN	Frequency Reference 15	
d1-16 RUN	Frequency Reference 16	
d1-17 RUN	**Jog Frequency Reference**	
d2-01	Frequency Reference Upper Limit	
d2-02	Frequency Reference Lower Limit	
d2-03	Master Speed Reference Lower Limit	
d3-01	Jump Frequency 1	
d3-02	Jump Frequency 2	
d3-03	Jump Frequency 3	
d3-04	Jump Frequency Width	
d4-01	Frequency Reference Hold Function Selection	
d4-03 RUN	Frequency Reference Bias Step (Up/Down 2)	

No.	Name	User Setting
d4-04 RUN	Frequency Reference Bias Accel/Decel (Up/Down 2)	
d4-05 RUN	Frequency Reference Bias Operation Mode Selection (Up/Down 2)	
d4-06	Frequency Reference Bias (Up/Down 2)	
d4-07 RUN	Analog Frequency Reference Fluctuation Limit (Up/Down 2)	
d4-08 RUN	Frequency Reference Bias Upper Limit (Up/Down 2)	
d4-09 RUN	Frequency Reference Bias Lower Limit (Up/Down 2)	
d4-10	Up/Down Frequency Reference Limit Selection	
d5-01	Torque Control Selection	
d5-02	Torque Reference Delay Time	
d5-03	Speed Limit Selection	
d5-04	Speed Limit	
d5-05	Speed Limit Bias	
d5-06	Speed/Torque Control Switchover Time	
d5-08	Unidirectional Speed Limit Bias	
d6-01	Field Weakening Level	
d6-02	Field Weakening Frequency Limit	
d6-03	Field Forcing Selection	
d6-06	Field Forcing Limit	
d7-01 RUN	Offset Frequency 1	
d7-02 RUN	Offset Frequency 2	
d7-03 RUN	Offset Frequency 3	
E1-01	**Input Voltage Setting**	
E1-03	V/f Pattern Selection	
E1-04	**Maximum Output Frequency**	
E1-05	**Maximum Voltage**	
E1-06	**Base Frequency**	
E1-07	Middle Output Frequency	
E1-08	Middle Output Frequency Voltage	
E1-09	**Minimum Output Frequency**	
E1-10	Minimum Output Frequency Voltage	
E1-11	Middle Output Frequency 2	
E1-12	Middle Output Frequency Voltage 2	
E1-13	**Base Voltage**	
E2-01	**Motor Rated Current**	
E2-02	Motor Rated Slip	
E2-03	Motor No-Load Current	
E2-04	Number of Motor Poles	

No.	Name	User Setting
E2-05	Motor Line-to-Line Resistance	
E2-06	Motor Leakage Inductance	
E2-07	Motor Iron-Core Saturation Coefficient 1	
E2-08	Motor Iron-Core Saturation Coefficient 2	
E2-09	Motor Mechanical Loss	
E2-10	Motor Iron Loss for Torque Compensation	
E2-11	**Motor Rated Power**	
E3-01	Motor 2 Control Mode Selection	
E3-04	Motor 2 Maximum Output Frequency	
E3-05	Motor 2 Maximum Voltage	
E3-06	Motor 2 Base Frequency	
E3-07	Motor 2 Mid Output Frequency	
E3-08	Motor 2 Mid Output Frequency Voltage	
E3-09	Motor 2 Minimum Output Frequency	
E3-10	Motor 2 Minimum Output Frequency Voltage	
E3-11	Motor 2 Mid Output Frequency 2	
E3-12	Motor 2 Mid Output Frequency Voltage 2	
E3-13	**Motor 2 Base Voltage**	
E4-01	Motor 2 Rated Current	
E4-02	Motor 2 Rated Slip	
E4-03	Motor 2 Rated No-Load Current	
E4-04	Motor 2 Motor Poles	
E4-05	Motor 2 Line-to-Line Resistance	
E4-06	Motor 2 Leakage Inductance	
E4-07	Motor 2 Motor Iron-Core Saturation Coefficient 1	
E4-08	Motor 2 Motor Iron-Core Saturation Coefficient 2	
E4-09	Motor 2 Mechanical Loss	
E4-10	Motor 2 Iron Loss	
E4-11	Motor 2 Rated Power	
E5-01	**Motor Code Selection (for PM Motors)**	
E5-02	**Motor Rated Power (for PM Motors)**	
E5-03	**Motor Rated Current (for PM Motors)**	
E5-04	**Number of Motor Poles (for PM Motors)**	
E5-05	**Motor Stator Resistance (for PM Motors)**	
E5-06	**Motor d-Axis Inductance (for PM Motors)**	
E5-07	**Motor q-Axis Inductance (for PM Motors)**	
E5-09	**Motor Induction Voltage Constant 1 (for PM Motors)**	
E5-11	Encoder Z-pulse Offset (for PM Motors)	
E5-24	**Motor Induction Voltage Constant 2 (for PM Motors)**	
E5-25	Polarity Switch for Initial Polarity Estimation Timeout (for PM Motors)	
F1-01	PG 1 Pulses Per Revolution	
F1-02	Operation Selection at PG Open Circuit (PGo)	

No.	Name	User Setting
F1-03	Operation Selection at Overspeed (oS)	
F1-04	Operation Selection at Deviation	
F1-05	PG 1 Rotation Selection	
F1-06	PG 1 Division Rate for PG Pulse Monitor	
F1-08	Overspeed Detection Level	
F1-09	Overspeed Detection Delay Time	
F1-10	Excessive Speed Deviation Detection Level	
F1-11	Excessive Speed Deviation Detection Delay Time	
F1-12	PG 1 Gear Teeth 1	
F1-13	PG 1 Gear Teeth 2	
F1-14	PG Open-Circuit Detection Time	
F1-18	dv3 Detection Selection	
F1-19	dv4 Detection Selection	
F1-20	PG Option Card Disconnect Detection 1	
F1-21	PG 1 Signal Selection	
F1-30	PG Option Card Port for Motor 2 Selection	
F1-31	PG 2 Pulses Per Revolution	
F1-32	PG 2 Rotation Selection	
F1-33	PG 2 Gear Teeth 1	
F1-34	PG 2 Gear Teeth 2	
F1-35	PG 2 Division Rate for PG Pulse Monitor	
F1-36	PG Option Card Disconnect Detection 2	
F1-37	PG2 Signal Selection	
F1-50 <I>	Encoder Selection	
F1-51 <I>	PGoH Detection Level	
F1-52 <I>	Communication Speed of Serial Encoder Selection	
F2-01	Analog Input Option Card Operation Selection	
F2-02 RUN	Analog Input Option Card Gain	
F2-03 RUN	Analog Input Option Card Bias	
F3-01	Digital Input Option Card Input Selection	
F3-03	Digital Input Option DI-A3 Data Length Selection	
F4-01	Terminal V1 Monitor Selection	
F4-02 RUN	Terminal V1 Monitor Gain	
F4-03	Terminal V2 Monitor Selection	
F4-04 RUN	Terminal V2 Monitor Gain	
F4-05 RUN	Terminal V1 Monitor Bias	
F4-06 RUN	Terminal V2 Monitor Bias	

No.	Name	User Setting
F4-07	Terminal V1 Signal Level	
F4-08	Terminal V2 Signal Level	
F5-01	Terminal M1-M2 Output Selection	
F5-02	Terminal M3-M4 Output Selection	
F5-03	Terminal P1-PC Output Selection	
F5-04	Terminal P2-PC Output Selection	
F5-05	Terminal P3-PC Output Selection	
F5-06	Terminal P4-PC Output Selection	
F5-07	Terminal P5-PC Output Selection	
F5-08	Terminal P6-PC Output Selection	
F5-09	DO-A3 Output Mode Selection	
F6-01	Communications Error Operation Selection	
F6-02	External Fault from Comm. Option Detection Selection	
F6-03	External Fault from Comm. Option Operation Selection	
F6-04	bUS Error Detection Time	
F6-06	Torque Reference/Torque Limit Selection from Comm. Option	
F6-07	Multi-Step Speed Enable/Disable Selection when NefRef/ComRef is Selected	
F6-08	Reset Communication Parameters	
F6-10	CC-Link Node Address	
F6-11	CC-Link Communications Speed	
F6-14	bUS Error Auto Reset	
F6-20	MECHATROLINK Station Address	
F6-21	MECHATROLINK Frame Size	
F6-22	MECHATROLINK Link Speed	
F6-23	MECHATROLINK Monitor Selection (E)	
F6-24	MECHATROLINK Monitor Selection (F)	
F6-25	Operation Selection at MECHATROLINK Watchdog Timer Error (E5)	
F6-26	MECHATROLINK bUS Errors Detected	
F6-30	PROFIBUS-DP Node Address	
F6-31	PROFIBUS-DP Clear Mode Selection	
F6-32	PROFIBUS-DP Data Format Selection	
F6-35	CANopen Node ID Selection	
F6-36	CANopen Communication Speed	
F6-45	BACnet Node Address	
F6-46	BACnet Baud Rate	
F6-47	Rx to Tx Wait Time	
F6-48	BACnet Device Object Identifier 0	
F6-49	BACnet Device Object Identifier 1	
F6-50	DeviceNet MAC Address	
F6-51	DeviceNet Communication Speed	
F6-52	DeviceNet PCA Setting	
F6-53	DeviceNet PPA Setting	

No.	Name	User Setting
F6-54	DeviceNet Idle Mode Fault Detection	
F6-55	DeviceNet Baud Rate Monitor	
F6-56	DeviceNet Speed Scaling	
F6-57	DeviceNet Current Scaling	
F6-58	DeviceNet Torque Scaling	
F6-59	DeviceNet Power Scaling	
F6-60	DeviceNet Voltage Scaling	
F6-61	DeviceNet Time Scaling	
F6-62	DeviceNet Heartbeat Interval	
F6-63	DeviceNet Network MAC ID	
F6-64 to F6-71	Reserved	
F7-01	IP Address 1	
F7-02	IP Address 2	
F7-03	IP Address 3	
F7-04	IP Address 4	
F7-05	Subnet Mask 1	
F7-06	Subnet Mask 2	
F7-07	Subnet Mask 3	
F7-08	Subnet Mask 4	
F7-09	Gateway Address 1	
F7-10	Gateway Address 2	
F7-11	Gateway Address 3	
F7-12	Gateway Address 4	
F7-13	Address Mode at Startup	
F7-14	Duplex Mode Selection	
F7-15	Communication Speed Selection	
F7-16	Communication Loss Timeout	
F7-17	EtherNet/IP Speed Scaling Factor	
F7-18	EtherNet/IP Current Scaling Factor	
F7-19	EtherNet/IP Torque Scaling Factor	
F7-20	EtherNet/IP Power Scaling Factor	
F7-21	EtherNet/IP Voltage Scaling Factor	
F7-22	EtherNet/IP Time Scaling	
F7-23 to F7-32	Dynamic Output Assembly Parameters	
F7-33 to F7-42	Dynamic Input Assembly Parameters	
F7-60	PZD1 Write	
F7-61	PZD2 Write	
F7-62	PZD3 Write	
F7-63	PZD4 Write	
F7-64	PZD5 Write	
F7-65	PZD6 Write	
F7-66	PZD7 Write	
F7-67	PZD8 Write	

No.	Name	User Setting
F7-68	PZD9 Write	
F7-69	PZD10 Write	
F7-70	PZD1 Read	
F7-71	PZD2 Read	
F7-72	PZD3 Read	
F7-73	PZD4 Read	
F7-74	PZD5 Read	
F7-75	PZD6 Read	
F7-76	PZD7 Read	
F7-77	PZD8 Read	
F7-78	PZD9 Read	
F7-79	PZD10 Read	
H1-01	Multi-Function Digital Input Terminal S1 Function Selection	
H1-02	Multi-Function Digital Input Terminal S2 Function Selection	
H1-03	Multi-Function Digital Input Terminal S3 Function Selection	
H1-04	Multi-Function Digital Input Terminal S4 Function Selection	
H1-05	Multi-Function Digital Input Terminal S5 Function Selection	
H1-06	Multi-Function Digital Input Terminal S6 Function Selection	
H1-07	Multi-Function Digital Input Terminal S7 Function Selection	
H1-08	Multi-Function Digital Input Terminal S8 Function Selection	
H2-01	Multi-Function Contact Output (terminal M1-M2)	
H2-02	Multi-Function Contact Output 2 (terminal M3-M4)	
H2-03	Multi-Function Contact Output 3 (terminal M5-M6)	
H2-06	Watt Hour Output Unit Selection	
H2-07 <1>	MEMOBUS Register 1 Address Select	
H2-08 <1>	MEMOBUS Register 1 Bit Select	
H2-09 <1>	MEMOBUS Register 2 Address Select	
H2-10 <1>	MEMOBUS Register 2 Bit Select	
H3-01	Terminal A1 Signal Level Selection	
H3-02	Terminal A1 Function Selection	
H3-03 RUN	Terminal A1 Gain Setting	
H3-04 RUN	Terminal A1 Bias Setting	
H3-05	Terminal A3 Signal Level Selection	
H3-06	Terminal A3 Function Selection	
H3-07 RUN	Terminal A3 Gain Setting	

No.	Name	User Setting
H3-08 RUN	Terminal A3 Bias Setting	
H3-09	Terminal A2 Signal Level Selection	
H3-10	Terminal A2 Function Selection	
H3-11 RUN	Terminal A2 Gain Setting	
H3-12 RUN	Terminal A2 Bias Setting	
H3-13	Analog Input Filter Time Constant	
H3-14	Analog Input Terminal Enable Selection	
H4-01	Multi-Function Analog Output Terminal FM Monitor Selection	
H4-02 RUN	**Multi-Function Analog Output Terminal FM Gain**	
H4-03 RUN	Multi-Function Analog Output Terminal FM Bias	
H4-04	Multi-Function Analog Output Terminal AM Monitor Selection	
H4-05 RUN	**Multi-Function Analog Output Terminal AM Gain**	
H4-06 RUN	Multi-Function Analog Output Terminal AM Bias	
H4-07	Multi-Function Analog Output Terminal FM Signal Level Selection	
H4-08	Multi-Function Analog Output Terminal AM Signal Level Selection	
H5-01	Drive Node Address	
H5-02	Communication Speed Selection	
H5-03	Communication Parity Selection	
H5-04	Stopping Method After Communication Error (CE)	
H5-05	Communication Fault Detection Selection	
H5-06	Drive Transmit Wait Time	
H5-07	RTS Control Selection	
H5-09	CE Detection Time	
H5-10	Unit Selection for MEMOBUS/Modbus Register 0025H	
H5-11	Communications ENTER Function Selection	
H5-12	Run Command Method Selection	
H5-17	Operation Selection when Unable to Write into EEPROM	
H5-18 <1>	Filter Time Constant for Motor Speed Monitoring	
H6-01	Pulse Train Input Terminal RP Function Selection	
H6-02 RUN	Pulse Train Input Scaling	
H6-03 RUN	Pulse Train Input Gain	

No.	Name	User Setting
H6-04 RUN	Pulse Train Input Bias	
H6-05 RUN	Pulse Train Input Filter Time	
H6-06 RUN	Pulse Train Monitor Selection	
H6-07 RUN	Pulse Train Monitor Scaling	
H6-08	Pulse Train Input Minimum Frequency	
L1-01	**Motor Overload Protection Selection**	
L1-02	Motor Overload Protection Time	
L1-03	Motor Overheat Alarm Operation Selection (PTC input)	
L1-04	Motor Overheat Fault Operation Selection (PTC input)	
L1-05	Motor Temperature Input Filter Time (PTC input)	
L1-08 <1>	oL1 Current Level	
L1-09 <1>	oL1 Current Level for Motor 2	
L1-13	Continuous Electrothermal Operation Selection	
L2-01	Momentary Power Loss Operation Selection	
L2-02	Momentary Power Loss Ride-Thru Time	
L2-03	Momentary Power Loss Minimum Baseblock Time	
L2-04	Momentary Power Loss Voltage Recovery Ramp Time	
L2-05	Undervoltage Detection Level (Uv1)	
L2-06	KEB Deceleration Time	
L2-07	KEB Acceleration Time	
L2-08	Frequency Gain at KEB Start	
L2-10	KEB Detection Time (Minimum KEB Time)	
L2-11	DC Bus Voltage Setpoint during KEB	
L2-29	KEB Method Selection	
L3-01	Stall Prevention Selection during Acceleration	
L3-02	Stall Prevention Level during Acceleration	
L3-03	Stall Prevention Limit during Acceleration	
L3-04	**Stall Prevention Selection during Deceleration**	
L3-05	Stall Prevention Selection during Run	
L3-06	Stall Prevention Level during Run	
L3-11	Overvoltage Suppression Function Selection	
L3-17	Target DC Bus Voltage for Overvoltage Suppression and Stall Prevention	
L3-20	DC Bus Voltage Adjustment Gain	
L3-21	Accel/Decel Rate Calculation Gain	
L3-22	Deceleration Time at Stall Prevention during Acceleration	

No.	Name	User Setting
L3-23	Automatic Reduction Selection for Stall Prevention during Run	
L3-24	Motor Acceleration Time for Inertia Calculations	
L3-25	Load Inertia Ratio	
L3-26	Additional DC Bus Capacitors	
L3-27	Stall Prevention Detection Time	
L3-34 <1>	Torque Limit Delay Time	
L3-35 <1>	Speed Agree Width at Intelligent Stall Prevention during Deceleration	
L4-01	Speed Agree Detection Level	
L4-02	Speed Agree Detection Width	
L4-03	Speed Agree Detection Level (+/-)	
L4-04	Speed Agree Detection Width (+/-)	
L4-05	Frequency Reference Loss Detection Selection	
L4-06	Frequency Reference at Reference Loss	
L4-07	Speed Agree Detection Selection	
L5-01	Number of Auto Restart Attempts	
L5-02	Auto Restart Fault Output Operation Selection	
L5-04	Fault Reset Interval Time	
L5-05	Fault Reset Operation Selection	
L6-01	Torque Detection Selection 1	
L6-02	Torque Detection Level 1	
L6-03	Torque Detection Time 1	
L6-04	Torque Detection Selection 2	
L6-05	Torque Detection Level 2	
L6-06	Torque Detection Time 2	
L6-08	Mechanical Weakening Detection Operation	
L6-09	Mechanical Weakening Detection Speed Level	
L6-10	Mechanical Weakening Detection Time	
L6-11	Mechanical Weakening Detection Start Time	
L7-01	Forward Torque Limit	
L7-02	Reverse Torque Limit	
L7-03	Forward Regenerative Torque Limit	
L7-04	Reverse Regenerative Torque Limit	
L7-06	Torque Limit Integral Time Constant	
L7-07	Torque Limit Control Method Selection during Accel/Decel	
L7-16	Torque Limit Process at Start	
L8-01 <1>	Internal Dynamic Braking Resistor Protection Selection (ERF type)	
L8-02	Overheat Alarm Level	
L8-03	Overheat Pre-Alarm Operation Selection	
L8-05	Input Phase Loss Protection Selection	
L8-07	Output Phase Loss Protection	

No.	Name	User Setting
L8-09	Output Ground Fault Detection Selection	
L8-10	Heatsink Cooling Fan Operation Selection	
L8-11	Heatsink Cooling Fan Off Delay Time	
L8-12	Ambient Temperature Setting	
L8-15	oL2 Characteristics Selection at Low Speeds	
L8-18	Software Current Limit Selection	
L8-19	Frequency Reduction Rate during Overheat Pre-Alarm	
L8-27	Overcurrent Detection Gain	
L8-29	Current Unbalance Detection (LF2)	
L8-32	Cooling Fan Failure Selection	
L8-35	Installation Method Selection	
L8-38	Carrier Frequency Reduction Selection	
L8-40	Carrier Frequency Reduction Off-Delay Time	
L8-41	High Current Alarm Selection	
L8-55 <1>	Internal Braking Transistor Protection	
L8-78	Power Unit Output Phase Loss Protection	
L8-93	LSo Detection Time at Low Speed	
L8-94	LSo Detection Level at Low Speed	
L8-95	Average LSo Frequency at Low Speed	
L9-03 <1>	Carrier Frequency Reduction Level Selection	
n1-01	Hunting Prevention Selection	
n1-02	Hunting Prevention Gain Setting	
n1-03	Hunting Prevention Time Constant	
n1-05	Hunting Prevention Gain while in Reverse	
n2-01	Speed Feedback Detection Control (AFR) Gain	
n2-02	Speed Feedback Detection Control (AFR) Time Constant 1	
n2-03	Speed Feedback Detection Control (AFR) Time Constant 2	
n3-01	High-Slip Braking Deceleration Frequency Width	
n3-02	High-Slip Braking Current Limit	
n3-03	High-Slip Braking Dwell Time at Stop	
n3-04	High-Slip Braking Overload Time	
n3-13	Overexcitation Deceleration Gain	
n3-14	High Frequency Injection during Overexcitation Deceleration	
n3-21	High-Slip Suppression Current Level	
n3-23	Overexcitation Operation Selection	
n5-01	Feed Forward Control Selection	
n5-02	Motor Acceleration Time	
n5-03	Feed Forward Control Gain	
n6-01	Online Tuning Selection	
n6-05	Online Tuning Gain	
n8-01	Initial Rotor Position Estimation Current	

No.	Name	User Setting
n8-02	Pole Attraction Current	
n8-03 <I>	Current Startup Time	
n8-04 <I>	Pole Attraction Time	
n8-11 <I>	Induction Voltage Estimation Gain 2	
n8-14 <I>	Polarity Compensation Gain 3	
n8-15 <I>	Polarity Compensation Gain 4	
n8-21 <I>	Motor Ke Gain	
n8-35	Initial Rotor Position Detection Selection	
n8-36 <I>	High Frequency Injection Level	
n8-37 <I>	High Frequency Injection Amplitude	
n8-39 <I>	Low Pass Filter Cutoff Frequency for High Frequency Injection	
n8-45	Speed Feedback Detection Control Gain (for PM Motors)	
n8-47	Pull-In Current Compensation Time Constant (for PM Motors)	
n8-48	Pull-In Current (for PM Motors)	
n8-49	d-Axis Current for High Efficiency Control (for PM Motors)	
n8-51	Acceleration/Deceleration Pull-In Current (for PM Motors)	
n8-54	Voltage Error Compensation Time Constant	
n8-55	Load Inertia	
n8-57	High Frequency Injection	
n8-62	Output Voltage Limit (for PM Motors)	
n8-65	Speed Feedback Detection Control Gain during ov Suppression	
n8-69	Speed Calculation Gain	
n8-72 <I>	Speed Estimation Method Selection	
n8-84	Initial Polarity Estimation Timeout Current	
o1-01 RUN	Drive Mode Unit Monitor Selection	
o1-02 RUN	User Monitor Selection After Power Up	
o1-03	Digital Operator Display Selection	
o1-04	V/f Pattern Display Unit	
o1-05 RUN	LCD Contrast Control	
o1-10	User-Set Display Units Maximum Value	
o1-11	User-Set Display Units Decimal Display	
o2-01	LO/RE Key Function Selection	
o2-02	STOP Key Function Selection	
o2-03	User Parameter Default Value	
o2-04	Drive Model Selection	
o2-05	Frequency Reference Setting Method Selection	

No.	Name	User Setting
o2-06	Operation Selection when Digital Operator is Disconnected	
o2-07	Motor Direction at Power Up when Using Operator	
o2-19	Selection of Parameter Write during Uv	
o3-01	Copy Function Selection	
o3-02	Copy Allowed Selection	
o4-01	Cumulative Operation Time Setting	
o4-02	Cumulative Operation Time Selection	
o4-03	Cooling Fan Maintenance Operation Time Setting	
o4-05	Capacitor Maintenance Setting	
o4-07	DC Bus Pre-charge Relay Maintenance Setting	
o4-09	IGBT Maintenance Setting	
o4-11	U2, U3 Initialize Selection	
o4-12	kWh Monitor Initialization	
o4-13	Number of Run Commands Counter Initialization	
q1-01 to q6-07	DriveWorksEZ Parameters	
r1-01 to r1-40	DWEZ Connection Parameter 1 to 20 (upper/lower)	
T1-00	Motor 1/Motor 2 Selection	
T1-01	Auto-Tuning Mode Selection	
T1-02	Motor Rated Power	
T1-03	Motor Rated Voltage	
T1-04	Motor Rated Current	
T1-05	Motor Base Frequency	
T1-06	Number of Motor Poles	
T1-07	Motor Base Speed	
T1-08	PG Number of Pulses Per Revolution	
T1-09	Motor No-Load Current (Stationary Auto-Tuning)	
T1-10	Motor Rated Slip (Stationary Auto-Tuning)	
T1-11	Motor Iron Loss	
T2-01	PM Motor Auto-Tuning Mode Selection	
T2-02	PM Motor Code Selection	
T2-03	PM Motor Type	
T2-04	PM Motor Rated Power	
T2-05	PM Motor Rated Voltage	
T2-06	PM Motor Rated Current	
T2-07	PM Motor Base Frequency	
T2-08	Number of PM Motor Poles	
T2-09	PM Motor Base Speed	
T2-10	PM Motor Stator Resistance	
T2-11	PM Motor d-Axis Inductance	
T2-12	PM Motor q-Axis Inductance	

No.	Name	User Setting
T2-13	Induced Voltage Constant Unit Selection	
T2-14	PM Motor Induced Voltage Constant	
T2-15	Pull-In Current Level for PM Motor Tuning	
T2-16	PG Number of Pulses Per Revolution for PM Motor Tuning	
T2-17	Encoder Z Pulse Offset	

<1> Not available in models 4A0930 and 4A1200.

No.	Name	User Setting
T3-01	Test Signal Frequency	
T3-02	Test Signal Amplitude	
T3-03	Motor Inertia	
T3-04	System Response Frequency	

This Page Intentionally Blank

Index

–

– 127

+

+1 127
+2 127
+3 127
+V 140

Numerics

24 V Power Supply 501
2-Wire Initialization 200
3-Wire Initialization 200
3-Wire Sequence 299
5th Most Recent Fault 650

A

A: Initialization Parameters 559
A/D Conversion Error 405
A1 140
A1000 Models 31
A1-02 (Motor 1 Control Mode) Dependent Parameters 657
A1-03 193
A1-04, A1-05: Password and Password Setting 200
A2 140
A3 140
AC 140
Accel/Decel Rate Calculation Gain 351
Accel/Decel Time 398, 538
Accel/Decel Time Setting Units 240
Accel/Decel Time Switching Frequency 241
Acceleration/Deceleration Pull-In Current (for PM Motors) 376
Acceleration Error 441
Acceleration Time 239
Acceleration Time Pull-In Current (for PM Motors) 634
Access Level Selection 198
AC Reactor 500
Action Selection below Minimum Output Frequency 210
Additional DC Bus Capacitors 352
Adjusted Slip Calculation Error 439
Adjusting the ASR Parameters 246
AEr 425
AFR Gain 393
AFR Time Constant 1 393
AFR Time Constant 2 393
AI-A3 500
AI-A3 Settings 286
Air Filter Replacement 491
Alarm Outputs for Maintenance Monitors 464
Alarm Register 007FH Contents 731
Alarms and Errors 3
Allowable Frequency Fluctuation 536
ALM LED Light 155
Altitude 54
AM 140
Ambient Temperature 54
Ambient Temperature and Installation Method Derating 554
Ambient Temperature Setting 362, 553, 627
Analog Filter Time Constant 398
Analog Frequency Reference Fluctuation Limit 263
Analog Frequency Reference Sample/Hold 304
Analog Input Card Settings 286
Analog Input Filter Time Constant 323
Analog Input Option Card Bias 287
Analog Input Option Card Gain 287
Analog Input Option Card Operation Selection 286
Analog Inputs / Pulse Train Input 140
Analog Input Terminal Enable Selection 323
Analog Monitor Card Settings 288
AO-A3 500
AO-A3 Settings 288
Application Presets 173
Application Selection 3
ASR 246
ASR Gain Auto-Tuning 179
ASR Gain Switching Frequency 248
ASR Integral Limit 249
ASR Integral Time 248
ASR Limit 249
ASR Primary Delay Time Constant 249
ASR Proportional Gain 248
ASR Response Frequency 189
Attachment for External Heatsink 501, 524
Automatic Reduction for Stall Prevention during Run 349, 623
Automatic Speed Regulator 246
Auto Restart Fault Output Operation Selection 354
Auto Restart Operation Selection 624
Auto-Tuning 3, 179, 183
Auto-Tuning Codes 439
Auto-Tuning Errors 403
Auto-Tuning Fault Codes 181
Auto-Tuning Fault Detection 439
Auto-Tuning Fault Solutions 439
Auto-Tuning for Induction Motors 176
Auto-Tuning for Permanent Magnet Motors 177

Auto-Tuning Input Data 177, 178, 179, 180
Auto-Tuning Interruption and Fault Codes..... 181
Auto-Tuning Mode Selection 184, 641

B

B1 127
B2 127
b6-01 through b6-04..... 398
Backing Up Parameter Values 193
BACnet Baud Rate 294
BACnet Device Object Identifier 0..... 295
BACnet Device Object Identifier 1..... 295
BACnet Node Address..... 294
BACnet Parameters..... 294
Baseblock 425
Base Frequency 273
Base Voltage 274
Basic Auto-Tuning Preparations..... 179
Basic Start-up and Motor Tuning..... 167
bb..... 425
Bi-Directional Speed Search Selection 221
boL..... 404, 425
Braking circuit protective cover 138
Braking Resistor 500, 514
Braking Resistor Fault 420
Braking Resistor Overheat..... 421
Braking Resistor Overheat Protection 539
Braking Resistor Overload Protection 515
Braking Torque 538
Braking Transistor..... 538
Braking Transistor Overload Fault 404, 425
Broadcast Messages 728
bUS 404, 425
bUS Error Auto Reset..... 291
bUS Error Detection Time..... 291

C

C1-02 163
C2-01 through C2-04..... 398
C3-01 393
C3-02 393
C4-02 393
C4-06 393
C6-02 ..... 151, 393
Cable Length Between Drive and Motor 137
CALL..... 426
Cannot Reset 426
CANopen Communication Speed 294
CANopen Node ID Selection 294
CANopen Parameters 294
Capacitor Maintenance..... 651
Capacitor Maintenance Setting 383, 638
Capacitor Maintenance Time..... 429
Carrier Frequency and Current Derating 545, 547
Carrier Frequency Derating 32
Carrier Frequency during Rotational Auto-Tuning 254
Carrier Frequency Lower Limit..... 253
Carrier Frequency Proportional Gain 253
Carrier Frequency Reduction..... 628
Carrier Frequency Reduction Off-Delay Time 365
Carrier Frequency Reduction Selection..... 364
Carrier Frequency Selection..... 137, 393
Carrier Frequency Setting Error 437
Carrier Frequency Upper Limit..... 253
Causes and Possible Solutions for a Blank and Unresponsive Digital Operator..... 438
CC-Link Node Address 292
CC-Link Parameters..... 291
CE..... 404, 426
CE Detection Time 708
CE Low Voltage Directive Compliance 738
CE mark..... 738
CF 405
Changing Parameter Settings or Values 161
Circulation Fan..... 47, 48
Clock Fault 406
Closed-Loop Crimp Terminal Size..... 129
Closed Loop Vector control 32
Closed Loop Vector Control for PM Motors.....32
Coast to stop..... 208
Coast to Stop with Timer 209
CoF 405
Comm. option card connection error (CN5-A) 414
Command Messages from Master to Drive 711
Communication Error 445
Communication Fault Detection Selection..... 708
Communication Loss Time-out..... 291
Communication Option Card..... 289
Communication Option Card Reference..... 652
Communication Parity Selection 707
Communications Enter Function Selection 709
Communications Error Operation Selection 290
Communication Speed of Serial Encoder Selection 286
Communication Speed Selection 707
Communications Timing 711
Comparing Parameter Settings..... 446
Component Names 41
Compressor Application 175
Conduit Bracket.....43
Conduit bracket 41
Conduit Bracket Dimensions for IP20/NEMA 1, UL Type 1 65
Conduit bracket front cover 41
Connecting a DC Link Choke..... 518
Connecting an AC Reactor 518
Connecting a Noise Filter..... 519
Connecting a Surge Absorber..... 518
Connecting Braking Units in Parallel 516
Connecting Peripheral Devices 502
Connecting to a PC (USB)..... 149
Connection of a Motor PTC..... 334
Continuous Electrothermal Operation Selection 336, 619
Control Board Connection Error..... 405, 407
Control Circuit Error 405, 407
Control Circuit Fault 406, 407
Control Circuit Input Terminals 139
Control Circuit Output Terminals 140
Control Circuit Terminal Block Functions 139
Control Fault 405
Control Method Selection 199
Control Method Selection Error 435

Control Mode..... 199, 646
Control Mode Dependent Parameter Default Values 657
Control Mode Mismatch..... 445
Control Modes and their Features 32
Control Mode Selection.....32
Control Power Supply Voltage Fault..... 423
Conveyor Application..... 174
Cooling Fan..... 41, 42, 43, 44, 45, 46, 47, 48
Cooling Fan Maintenance 651
Cooling Fan Maintenance Setting (Operation Time) 638
Cooling Fan Maintenance Time 429
Cooling Fan Operation Time..... 651
Cooling Fan Operation Time Setting..... 383
CoPy..... 445
Copy Allowed Selection 383
Copy Function..... 194
Copy Function Errors 399
Copy Function Selection..... 382
Copy Unit Error..... 445
CopyUnitManager 194
CPEr 445
CPF02 405
CPF03 405
CPF06 406
CPF07 406
CPF08 406
CPF11 406
CPF11 to CPF14 405
CPF12 406
CPF13 406
CPF14 406
CPF16 406
CPF16 to CPF19 405
CPF17 406
CPF18 406
CPF19 407
CPF20 407
CPF21 407
CPF22 407
CPF23 407
CPF24 407
CPF25 407
CPyE 445
CRC-16 712
CRC-16 Checksum Calculation Example 713
CrST 426
CSEr 445
Cumulative Operation Time..... 651
Cumulative Operation Time at 5th Most Recent Fault 650
Cumulative Operation Time at Most Recent Fault..... 650
Cumulative Operation Time at Previous Fault..... 649
Cumulative Operation Time Selection..... 383, 638
Cumulative Operation Time Setting 383, 638
Current Alarm..... 429
Current Detection Error..... 442
Current Fault 649
Current Offset Fault 405
Current Unbalance..... 423
Current Unbalance Detection (LF2)..... 363, 628
Cyc..... 426
Cyclic Redundancy Check..... 712

D

d3-01 through d3-04..... 398
Daily Inspection..... 460
d-Axis ACR Output 654
d-Axis Current for High Efficiency Control (for PM Motors)..... 376, 634
DC bus circuit protective cover..... 138
DC Bus Overvoltage 431
DC Bus Pre-Charge Relay Maintenance Setting 384
DC Bus Undervoltage..... 423
DC Bus Voltage..... 646
DC Bus Voltage Adjustment Gain 350
DC Bus Voltage at Previous Fault..... 649
DC Bus Voltage Setpoint during KEB..... 345
DC Injection Braking Current..... 214
DC Injection Braking Input Timing Diagram..... 306
DC Injection Braking Start Frequency..... 207
DC Injection Braking Time at Start 208
DC Injection Braking Time at Stop 215
DC Injection Braking to Stop 208
DC link choke 500
DC Link Chokes for IEC/EN 61000-3-2 Compliance 747
D Control 223
Deceleration Rate Calculation Gain..... 623
Deceleration Time 239
Deceleration Time at Stall Prevention during Acceleration..... 346, 623
Defaults by Drive Model Selection (o2-04) and ND/HD (C6-01) 181
Derivative Time (D)..... 227
Desired DC Bus Voltage during KEB 621
dEv..... 407, 427
DeviceNet Baud Rate Monitor..... 296
DeviceNet Communication Speed..... 295
DeviceNet Heartbeat Interval 296
DeviceNet Idle Mode Fault Detection 296
DeviceNet MAC Address..... 295
DeviceNet Network MAC ID 297
DeviceNet Parameters..... 295
DeviceNet PCA Setting..... 295
DeviceNet PPA Setting 296
DeviceNet Scaling Factors 296
dFPS 445
DI-A3..... 500
DI-A3 Settings 287
Diagnosing and Resetting Faults 412
Digital Input Card Settings 287
Digital Input Option Card Input Selection 287
Digital Input Option DI-A3 Data Length Selection..... 287
Digital Input Reading 211
Digital Operator 41, 42, 43, 44, 45, 46, 47, 48, 41
Digital Operator Dimensions.....58
Digital Operator Display Selection..... 379, 636
Digital Operator Installation Methods and Required Tools.....59
Digital Operator Keypad Functions 380
Digital Operator Menu and Screen Structure 159
Digital Operator Remote Installation 58
digital operator remote usage 58
Digital Output Card Settings 289
Digital Output Option Card Terminal Function Selection 289
Dimensions for IP00/Open Type Enclosure: 200 V Class 68

Dimensions for IP00/Open Type Enclosure: 400 V Class 69
Dimensions for IP00/Open Type Enclosure: 600V Class 69
Dimensions for IP20/NEMA 1, UL Type 1 Enclosure: 200 V Class 62
Dimensions for IP20/NEMA 1, UL Type 1 Enclosure: 400 V Class 63
Dimensions for IP20/NEMA 1, UL Type 1 Enclosure: 600 V Class 64
DIP Switch S1 49
DIP Switch S1 Settings 147
DIP Switch S2 49
DIP switch S4 49
DIP Switch S4 Settings 147
DM- 140
DM+ 140
dnE 427
DO-A3 500
DO-A3 Output Mode Selection 289
DO-A3 Settings 289
Down Arrow Key 155
Drive/kVA Selection 637
Drive Capacity Setting Fault 434
Drive Cooling Fans 461
Drive Cover 42, 43, 44, 45, 46, 47, 48
Drive Derating Data 54
Drive Disabled 427
Drive Duty Mode Selection 3
Drive Mode 160, 161
Drive Model Mismatch 445
Drive Models and Types 61
Drive Model Selection 381
Drive Mode Unit Monitor Selection 379, 636
Drive Operation Status at Previous Fault 649
Drive Overload 417
Drive Protection 2 366
Drive Ready 150
Drive Replacement 493
Drive Slave Address 707
Drive Specifications 538
Drive Status 647
Drive Transmit Wait Time 708
Drive Unit Signal Fault 407
Drive Watt Loss Data 540
DriveWizard Industrial 194, 501
DriveWorksEZ 501
DriveWorksEZ Connection Parameters 385
DriveWorksEZ Custom Monitor 1 to 10 656
DriveWorksEZ Fault 409
DriveWorksEZ Function Selection 203
DriveWorksEZ Monitors 387
DriveWorksEZ Parameters 385
DriveWorksEZ Pro Monitors 656
Droop Control Delay Time 235
Droop Control Gain 234
During Frequency Output Time Chart 318
During Run Time Chart 310
dv1 408
dv2 408
dv3 408
dv3 Detection Selection 285
dv4 408
dv4 Detection Selection 285
dv7 409
dWAL 409
Dwell Function 233, 398
Dwell Reference at Start 234
Dwell Reference at Stop 234
Dwell Time at Start 234
Dwell Time at Stop 234
DWEZ Version Control Monitor 1 to 3 656
dWF1 409
dWFL 409
Dynamic Braking Options 514
Dynamic Braking Transistor 421

E

E (G) 140
E1-08 394
E1-10 394
E2-03 440
E3-01 (Motor 2 Control Mode) Dependent Parameters 660
E5 409
EDM Switch Settings 148
EEPROM Memory Data Error 406
EEPROM Memory DriveWorksEZ Data Error 409
EEPROM Write Error 410
EF 427
EF0 ..... 409, 427
EF1 ..... 410, 427
EF2 ..... 410, 427
EF3 ..... 410, 427
EF4 ..... 410, 427
EF5 ..... 410, 427
EF6 ..... 410, 427
EF7 ..... 410, 427
EF8 ..... 410, 428
Electromotive Force Parameter Tuning 177
EMC Filter and Drive Installation for CE Compliance 744
EMC Filter Installation 742
EMC Filters 742
EMC Guidelines 738
EMC Guidelines Compliance 519
Enclosure Types 36
Encoder Selection 286
Encoder Z-Pulse Offset 188
Encoder Z-Pulse Offset (for PM Motors) 282
End 445
End1 439
End2 439
End3 439
End4 439
End5 439
End6 439
End7 440
EnDat Encoder 500
Energy Saving 235
Energy Saving Coefficient Value 236
Energy Saving Control Filter Time Constant 236
Energy Saving Control Selection 235
Energy Saving Gain 235
Energy Savings Constants Error 437
Enter Command 709
Enter Command Settings when Upgrading the Drive 732

Enter Command Types 732
Enter Data from the Motor Nameplate 182
ENTER Key 155
Er-01 440
Er-02 440
Er-03 440
Er-04 440
Er-05 441
Er-08 441
Er-09 441
Er-10 441
Er-11 441
Er-12 442
Er-13 443
Er-14 443
Er-15 443
Er-16 443
Er-17 443
Er-18 443
Er-19 443
Er-20 443
Er-21 444
Er-25 444
Err 410
Error Reading Data 446
Errors and Displays When Using the Copy Function 403
Error Writing Data 445
European Standards 738
Excessive PID Feedback 411, 428
Excessive V/f Setting 439
Exhaust Fan Application 174
Exterior and Mounting Dimensions 61
External Digital Operator Connection Fault 418
External Fault 410, 427
External Fault from Comm. Option Detection Selection 290
External Fault from Comm. Option Operation Selection 290
External Interlock 150

F

FAn 410, 428
FAn Alarm Location Monitor 653
Fan Bracket 43, 44, 45, 46
Fan Cover 41, 42
Fan Finger Guard 41, 42
Fan Guard 43, 44, 45, 46, 47, 48
Fast Stop Sequence 303
Fast Stop Time 240
Fault Causes and Solutions 404
Fault Detection 404
Fault Displays 404
Fault History 386, 447
Fault Relay Output 140
Fault Reset Interval Time 355, 624
Fault Reset Methods 399
Fault Reset Operation Selection 355, 625
Fault Restart 317
Faults 399, 400
Fault Trace 386, 447
FbH 411, 428
FbL 411, 428
Feed Forward Control 371, 398
Feed Forward Control Diagram 371
Feed Forward Control Gain 372
Feed Forward Control Selection 371
Ferrule Dimensions 142
Ferrule Terminal Types and Sizes 142
Ferrule-Type Wire Terminals 142
Field Forcing 268
Field Forcing Limit 269
Field Forcing Selection 269
Field Weakening 268
Field Weakening Frequency Limit 268
Field Weakening Level 268
Fine-Tuning Advanced Open Loop Vector Control for PM Motors 396
Fine-Tuning Closed Loop Vector Control 394
Fine-Tuning Closed Loop Vector Control for PM Motors 396
Fine-Tuning Open Loop Vector Control 393
Fine-Tuning Open Loop Vector Control for PM Motors 395
Fine-Tuning V/f Control and V/f Control with PG 392
FJOG/RJOG Operation 302
FLASH Memory Fault 406
FM 140
Forward/Reverse Run Command Input Error 427
Forward Regenerative Torque Limit 359, 626
Forward Torque Limit 359, 626
Frequency Accuracy (Temperature Fluctuation) 538
Frequency Control Range 538
Frequency Detection 1 Time Chart 312
Frequency Detection 2 Time Chart 312
Frequency Detection 3 Example with a Positive L3-04 Value 315
Frequency Detection 4 Example with Positive L3-04 Value 316
Frequency Gain at KEB Start 345
Frequency Reduction Rate during Overheat Pre-Alarm 363, 628
Frequency Reference 255, 646
Frequency Reference at Previous Fault 649
Frequency Reference at Reference Loss 353, 624
Frequency Reference Bias 261
Frequency Reference Bias (Up/Down 2) 655
Frequency Reference Bias Accel/Decel 262
Frequency Reference Bias Lower Limit 261
Frequency Reference Bias Operation Mode Selection 262
Frequency Reference Bias Step 261
Frequency Reference Bias Upper Limit 261
Frequency Reference from MEMOBUS/Modbus Comm. 652
Frequency Reference Hold Function Selection 259
Frequency Reference Loss Detection Selection 313, 624
Frequency Reference Lower Limit 257
Frequency Reference Monitor Content During PID 232
Frequency Reference Selection 561
Frequency Reference Selection 1 205
Frequency Reference Selection 2 213
Frequency Reference Setting / Decimal Display 636
Frequency Reference Setting and User-Set Display 636
Frequency Reference Setting Hierarchy 255
Frequency Reference Setting Method Selection 381, 637
Frequency Reference Source Selection 652
Frequency Reference Upper Limit 257
Frequency Setting Resolution 538
Frequency Setting Signal 538
Front Cover 41, 42, 43, 44, 45, 46, 47, 48

Front Cover Screw 42, 44, 45, 46, 47, 48
Function Code 712
Functions for Terminals S1 to S8 298
Fuse 520
Fuse Selection 520, 522, 738, 760, 762

G

Gate Drive Board Undervoltage 424
GF 411
Ground Fault 411
Ground Terminal 49
Ground Wiring 137

H

H1 139
H1 Multi-Function Digital Input Selections 603
H2 139
H3-02 453
H3-13 398
H3 Multi-Function Analog Input Settings 614
Hbb 428
HbbF 429
HC 139
HCA 429
HD 251
HD and ND 528
Heatsink 41, 42, 43, 44, 45, 46, 47, 48
Heatsink Cooling Fan Off-Delay Time 362
Heatsink Cooling Fan Operation Delay Time 627
Heatsink Cooling Fan Operation Selection 362, 627
Heatsink Overheat 415, 430
Heatsink Overheat Warning 430
Heatsink Temperature 651
Heavy Duty 251
Heavy Duty Ratings 251
High Current Alarm Selection 365
High Frequency Injection 377
High Frequency Injection Amplitude 375
High Frequency Injection during Overexcitation Deceleration 370
High Frequency Injection Level 375
High Frequency Injection Parameter Tuning 177
High Frequency Injection Parameter Tuning Error 444
High Performance Operation Using OLV or CLV 169
High Slip Braking 368
High Slip Braking Current Limit 369
High-Slip Braking Current Limit 631
High Slip Braking Deceleration Frequency Width 368
High-Slip Braking Deceleration Frequency Width 631
High Slip Braking Dwell Time at Stop 369
High-Slip Braking Dwell Time at Stop 631
High-slip Braking oL 418
High Slip Braking Overload Time 369
High-Slip Braking Overload Time 631
High Slip Suppression Current Level 370
High-Slip Suppression Current Level 631
Humidity 54
Hunting Prevention 367
Hunting Prevention Gain Setting 367, 630
Hunting Prevention Gain while in Reverse 367, 630
Hunting Prevention Selection 367, 630
Hunting Prevention Time Constant 367, 630
HVAC Fan Application 175
Hybrid IC Failure 407

I

I/O Connections 112
IEC/EN 61800-3 Filters 745
iFEr 445
IG 140
IGBT Maintenance 651
IGBT Maintenance Setting 384, 638
IGBT Maintenance Time (50%) 430
IGBT Maintenance Time (90%) 433
Induced Noise 519
Induced Voltage Constant Unit Selection 188
Induction Voltage Error 443
Induction Voltage Estimation Gain 2 374
Inertia Tuning 179
Inertia Tuning Frequency Reference 189
Inertia Tuning Reference Amplitude 189
Initialization 198
Initialization Required 435
Initialize Parameters 193, 199
Initial Operation 166
Initial Polarity Estimation Timeout 409
Initial Rotor Position Detection Selection 374
Initial Rotor Position Estimation Current 373
Input Fuses 520, 522, 738, 760, 762
Input Phase Loss 420
Input Phase Loss Protection Selection 361, 627
Input Pulse Monitor 648
Input Terminals 165
Input Terminal Status 647
Input Terminal Status at Previous Fault 649
Input Voltage Setting 270
Inrush Prevention Relay Fault 424
Inrush Prevention Relay Maintenance Setting 638
Inspection 460, 461
Installation Area 54
Installation Environment 54
Installation Method Selection 364
Installation Orientation 54
Installation Spacing 0
Installing a Braking Resistor\: ERF type 514
Installing a Braking Resistor Unit\: LKEB type 514
Installing a Braking Unit\: CDBR Type 515
Installing a GFCI 517
Installing a Magnetic Contactor 24
Installing a Molded Case Circuit Breaker (MCCB) 24
Installing a Motor Thermal Overload (oL) Relay on the Drive Output . 524
Installing Other Types of Braking Resistors 515
Installing Peripheral Devices 514
Installing the Cooling Fan 470
Integral Limit Setting 227
Integral Operation during Accel/Decel 249
Integral Operation during Accel/Decel for Motor 2 250
Integral Time Setting (I) 227
Interlock Circuit Example 150
Internal Dynamic Braking Resistor Protection (ERF type) 360, 627
Inversion Detection 408

Inversion Prevention Detection 408
IP00/Open Type Enclosure 39
IP20/NEMA 1, UL Type 1 Enclosure 39
IP20/NEMA 1, UL Type 1 Kit 501
IP20/NEMA 1, UL Type 1 Kit Selection 70

J

Jog Frequency Reference 255
Jumper S5 49
Jump Frequency 398
Jump Frequency Width 258

K

KEB Acceleration Time 345, 621
KEB Deceleration Time 344, 621
KEB Detection Time 345
KEB Function Related Adjustments 343
KEB Method Selection 345
KEB Operation Using a KEB Input 340
KEB Operation Using L2-02, Without KEB Input 341
KEB Operation Using L2-02 and KEB Input 341
KEB Operation Using L2-10, Without KEB Input 342
KEB Operation Using L2-10 and KEB Input 342
KEB Operation Wiring Example 342
KEB Ride-Thru End Detection 340
KEB Ride-Thru Function 307
KEB Ride-Thru Start 340
KEB Start Output Frequency Reduction 621
Keys and Displays on the Digital Operator 0
kWh 651
kWh, Lower 4 Digits 651
kWh, Upper 5 Digits 651
kWh Monitor Initialization 384
kWh Monitor Initial Value Selection 638

L

L3-01 through L3-06 398
L3-02 455
L3-04 453
L3-11 398
L7-01 through L7-04 398
L7-06 398
L7-07 398
L8-12 553
L8-35 553
Language Selection 198
LCD Contrast Control 636
LCD Display 156
Leakage Inductance Alarm 439
Leakage Inductance Error 443
LED Check 651
LED Operator 501
LF 411
LF2 412
LF3 412
Line-to-Line Motor Resistance Online Tuning 632
Line-to-Line Resistance Error 440
LO/RE 157, 165, 190
LO/RE (LOCAL/REMOTE) Key Function Selection 212
LO/RE LED 157
LO/RE Light 155
LO/RE Selection Key 155
Load Inertia 376, 634
Load Inertia Ratio 250, 351, 623
LOCAL 165
LOCAL/REMOTE Key Function Selection 637
LOCAL/REMOTE Run Selection 212
Loopback Test 714
Loss of Reference Function 353
Low Pass Filter Cutoff Frequency for High Frequency Injection 375
Low Voltage Directive 738
Low Voltage Wiring for Control Circuit Terminals 764
LSo 412
LSo Fault 412
LT-1 429
LT-2 429
LT-3 429
LT-4 430

M

M1 140
M2 140
M3 140
M4 140
M5 140
M6 140
MA 140
Magnetic Flux Compensation Value 215
Main Circuit Connection Diagram 115, 138
Main Circuit Terminal 49
Main Circuit Terminal and Motor Wiring 137
Main Circuit Terminal Block Configuration 119
Main Circuit Terminal Functions 127
Main Circuit Terminal Wiring 49
Main Circuit Wiring 127
Main Power Circuit Voltage Adjustment Gain 623
Maintenance 317, 464
Maintenance Alarms 464
Maintenance Monitors 386
Maintenance Monitor Settings 383
Master Speed Reference Lower Limit 258
Maximum Output Frequency 273
Maximum Voltage 273
MB 140
MC 140
Mechanical Weakening Detection 317
Mechanical Weakening Detection 1 ..... 418, 431
Mechanical Weakening Detection 2 423
Mechanical Weakening Detection Operation 357, 626
Mechanical Weakening Detection Speed Level 358, 626
Mechanical Weakening Detection Start Time 358, 626
Mechanical Weakening Detection Time 358, 626
MECHATROLINK bUS Errors Detected 293
MECHATROLINK Comm. Cycle Setting Error 426
MECHATROLINK Frame Size 292
MECHATROLINK Link Speed 292
MECHATROLINK Monitor Selection (Code 0EH) 292, 293
MECHATROLINK Station Address 292
MEMOBUS/Modbus Comm. Test Mode Complete 432
MEMOBUS/Modbus Communication Error 404, 426
MEMOBUS/Modbus Communications Reference 652

MEMOBUS/Modbus Communication Test Mode Error 432
MEMOBUS/Modbus Data Table 716
MEMOBUS/Modbus Error Code 648
MEMOBUS/Modbus Error Codes 733
MEMOBUS/Modbus Setup Parameters 707
MEMOBUS/Modbus Specifications 703
MEMOBUS/Modbus Switch Settings 148
Menu Structure for Digital Operator 159
Message Format 712
Message ID (INV) 648
Message ID (OPR) 648
Middle Output Frequency 273
Middle Output Frequency 2 273
Middle Output Frequency Voltage 273
Middle Output Frequency Voltage 2 274
Minimum KEB Time 345
Minimum Output Frequency 273
Minimum Output Frequency Voltage 273
Minimum Wait Time for Sending Messages 711
Minor Alarms 400
Minor Fault 440
Minor Fault and Alarm Displays 402
Minor Faults 400
Minor Faults and Alarms 399, 400
Model, Voltage Class, Capacity Mismatch 446
Model Number and Nameplate Check 35
Modes 160
Momentary Overcurrent Protection 539
Momentary Power Loss Minimum Baseblock Time 344, 621
Momentary Power Loss Operation Selection 219, 621
Momentary Power Loss Ride-Thru 338, 539
Momentary Power Loss Ride-Thru Time 344, 621
Momentary Power Loss Voltage Recovery Ramp Time 344, 621
Monitor Output 140
Monitor Parameters 326, 646
Most Recent Fault 650
Motor 1/Motor 2 Selection 183
Motor 1 Parameters 274
Motor 2 ASR Gain Switching Frequency 250
Motor 2 ASR Integral Limit 250
Motor 2 ASR Integral Time 250
Motor 2 ASR Limit 250
Motor 2 ASR Primary Delay Time Constant 250
Motor 2 ASR Proportional Gain 250
Motor 2 Base Frequency 277
Motor 2 Base Voltage 277
Motor 2 Control Mode Selection 277
Motor 2 Inertia 251
Motor 2 Iron Loss 280
Motor 2 Leakage Inductance 279
Motor 2 Line-to-Line Resistance 279
Motor 2 Load Inertia Ratio 251
Motor 2 Max Output Frequency 277
Motor 2 Max Voltage 277
Motor 2 Mechanical Loss 279
Motor 2 Mid Output Frequency 277
Motor 2 Mid Output Frequency 2 277
Motor 2 Mid Output Frequency Voltage 277
Motor 2 Mid Output Frequency Voltage 2 277
Motor 2 Minimum Output Frequency 277
Motor 2 Minimum Output Frequency Voltage 277
Motor 2 Motor Iron-Core Saturation Coefficient 1 279
Motor 2 Motor Iron-Core Saturation Coefficient 2 279
Motor 2 Motor Poles 279
Motor 2 Parameters 278
Motor 2 Rated Current 278
Motor 2 Rated No-Load Current 278
Motor 2 Rated Power 280
Motor 2 Rated Slip 278
Motor 2 Slip Compensation Gain 243
Motor 2 Slip Compensation Limit 244
Motor 2 Slip Compensation Primary Delay Time 243
Motor 2 Slip Compensation Selection during Regeneration 244
Motor 2 Torque Compensation Gain 245
Motor Acceleration Time 371
Motor Acceleration Time for Inertia Calculations 351, 623
Motor Base Frequency 183, 185, 641
Motor Base Speed 185, 641
Motor Code Selection (for PM Motors) 280
Motor Data Error 440
Motor d-Axis Current at Previous Fault 649
Motor d-Axis Inductance (for PM Motors) 281
Motor Direction at Power Up when Using Operator 382, 637
Motor Direction Error 441
Motor Does Not Rotate 450
Motor Excitation Current (Id) 654
Motor Feedback Resolver Interface 501
Motor Hunting and Oscillation Control Parameters 398
Motor Induction Voltage Constant 1 (for PM Motors) 282
Motor Induction Voltage Constant 2 (for PM Motors) 282
Motor Inertia 189, 250
Motor Iron-Core Saturation Coefficient 439
Motor Iron-Core Saturation Coefficient 1 275
Motor Iron-Core Saturation Coefficient 2 275
Motor Iron Loss 185, 642
Motor Iron Loss for Torque Compensation 276
Motor Ke Gain 374
Motor Leakage Inductance 275
Motor Line-to-Line Resistance 275
Motor Mechanical Loss 276
Motor No-Load Current 185, 275
Motor Overheat 430
Motor Overheat (NTC Input) 416, 430
Motor Overheat Alarm (PTC Input) 416
Motor Overheat Alarm Operation Selection 335, 619
Motor Overheat Fault (PTC Input) 416
Motor Overheat Fault Operation Selection 335, 619
Motor Overload 417
Motor Overload Estimate (oL1) 652
Motor Overload Protection Selection 317, 619, 765
Motor Overload Protection Time 333, 619, 765
Motor Performance Fine-Tuning 192
Motor PG Feedback Line Driver Interface 500
Motor PG Feedback Open Collector Interface 500
Motor Poles 183
Motor Protection 331
Motor Protection Using a PTC Thermistor 325
Motor PTC Characteristics 335
Motor q-Axis Current at Previous Fault 649
Motor q-Axis Inductance (for PM Motors) 281

Motor Rated Current 183, 184, 274, 641, 764
Motor Rated Current (for PM Motors)..... 281
Motor Rated Power..... 184, 276, 641
Motor Rated Power (for PM Motors) 281
Motor Rated Slip..... 185, 274
Motor Rated Voltage 183, 184, 641
Motor Rotates in One Direction Only..... 451
Motor Secondary Current (Iq) 654
Motor Selection 303
Motor Selection 1/2..... 641
Motor Speed..... 646
Motor Speed at Previous Fault..... 649
Motor Speed Error 2..... 443
Motor Stator Resistance (for PM Motors)..... 281
Motor Switch during Run..... 432
Motor Temperature (NTC 653
Motor Temperature Input Filter Time..... 335, 619
Motor Wiring..... 137
Mounting Hole 42, 43, 44, 45, 46, 47, 48
Mounting hole.....41
MP 140
Multi-Function Analog Input Selection Error..... 436
Multi-Function Analog Input Terminal Settings 321
Multi-Function Analog Outputs 246
Multi-Function Analog Output Terminal AM Bias 326
Multi-Function Analog Output Terminal AM Gain..... 326
Multi-Function Analog Output Terminal AM Monitor Selection..... 326
Multi-Function Analog Output Terminal AM Signal Level Selection .. 327
Multi-Function Analog Output Terminal FM Bias..... 326
Multi-Function Analog Output Terminal FM Gain 326
Multi-Function Analog Output Terminal FM Monitor Selection 326
Multi-Function Analog Output Terminal FM Signal Level Selection... 327
Multi-Function Digital Inputs..... 139
Multi-Function Digital Input Terminal Settings..... 298
Multi-Function Digital Output 140
Multi-Function Digital Output Terminal Settings..... 309
Multi-Function Input Selection Error 434
Multiple Drive Installation 55
Multiple Drive Wiring 137
Multi-Step Speed Selection..... 206

N

n2-01..... 393
n2-02..... 393
n2-03..... 393
Nameplate.....35
ND 251
ndAT..... 446
NetRef/ComRef Function Selection..... 291
Network Termination 704
No-Load Current Alarm 440
No-Load Current Error..... 441
No-Load Operation..... 190
No-Load Operation Test Run 190
Normal Duty..... 251
Normal Duty Ratings..... 251
Notes on Inertia Tuning and ASR Gain Auto-Tuning 181
Notes on Rotational Auto-Tuning 180
Notes on Stationary Auto-Tuning 180
nSE 412
Number of Auto Restart Attempts..... 354, 624
Number of Motor Poles..... 185, 275, 641
Number of Motor Poles (for PM Motors) 281
Number of PM Motor Poles..... 187
Number of Run Commands 651
Number of Run Commands Counter Initialization..... 384
Number of Speed Search Restarts 221

O

o2-03..... 193
oC 413
oFA00 413
oFA01 414
oFA03 to oFA06 414
oFA10 414
oFA11 414
oFA12 to oFA17 414
oFA30 to oFA43 414
oFb00..... 414
oFb01..... 414
oFb02..... 414
oFb03 to oFb11 414
oFb12 to oFb17 414
oFC00 415
oFC01 415
oFC02 415
oFC03 to oFC11 415
oFC12 to oFC17 415
oFC50 to oFC55 415
Offset Frequency..... 655
oH..... 415, 430
oH1 416
oH2 430
oH3 ..... 416, 430
oH4 416
oH5 ..... 416, 430
oH Alarm Location Monitor 653
oL1..... 417
oL1 Current Level 619
oL1 Current Level for Motor 2 619
oL2..... 417
oL2 Characteristics Selection at Low Speeds..... 362, 627
oL3..... 418, 431
oL4..... 418, 431
oL5..... 418, 431
oL7..... 418
Online Tuning Gain 373
Online Tuning Selection 373
oPE 434
oPE01 434
oPE02 434
oPE03 434
oPE04 435
oPE05 435
oPE06 435
oPE07 436
oPE08 436
oPE09 436
oPE10 437
oPE11 437

oPE13 437
oPE15 437
oPE16 437
oPE18 437
oPE20 438
oPE Fault Parameter 648
Open Loop Vector Control 32, 394
Open Loop Vector Control for IPM Motors 32
Open Loop Vector Control for PM Motors 32
Open Loop Vector Control Mode Tuning 393
Open Loop Vector Control Mode Tuning Parameters ... 393, 394, 395, 396
Operating with the Load Connected 192
Operation Errors 399, 403
Operation Selection at Overspeed (oS) 283
Operation Selection at PG Open Circuit (PGo) 283
Operation Selection at Watchdog Error (E5) 293
Operation Selection when Digital Operator is Disconnected 382, 637
Operation Status Monitors 386
Operation with Permanent Magnet Motors 3
Operator Programming Errors 434
Operator Related Settings 379
oPr 418
Optional 24 V DC power supply connector cover 41, 42, 43, 44, 45, 46
Option card connection error (CN5-A) 414
Option Card Connection Error at Option Port CN5-A 413
Option Card Connection Error at Option Port CN5-C 415
Option card connector (CN5-A) 49
Option card connector (CN5-B) 49
Option card connector (CN5-C) 49
Option card error occurred at option port CN5-A 414
Option card error occurred at option port CN5-B 414
Option card error occurred at option port CN5-C 415
Option Card External Fault 409, 427
Option Card Fault at Option Port CN5-A 414
Option Card Fault at Option Port CN5-B 414
Option Card Fault at Option Port CN5-C 415
Option Communication Error 404, 425
Option Frequency Reference 652
Option Installation 503
Option Settings 283
oS 418, 431
Oscillation or Hunting 454
Output Current 646
Output Current 1 During Speed Search 220
Output Current at Previous Fault 649
Output Current Imbalance 412
Output Frequency 646
Output Frequency after Soft Start 647
Output Frequency at Previous Fault 649
Output Frequency Reduction During Overheat Alarm 361
Output Frequency Resolution 538
Output Ground Fault Detection Selection 362, 627
Output of speed control (ASR) (for Simple V/f PG) 654
Output Phase Loss 411
Output Phase Loss Protection 627
Output Phase Loss Protection Selection 361
Output Power 646
Output Power at Previous Fault 649
Output Short Circuit or IGBT Fault 421
Output Terminal Status 647
Output Terminal Status at Previous Fault 649
Output Voltage at Previous Fault 649
Output Voltage Detection Fault 424, 433
Output Voltage Limit (for PM Motors) 377
Output Voltage Limit Operation Selection 243
Output Voltage Reference 646
Output Voltage Reference (Vd) 654
Output Voltage Reference (Vq) 654
ov 419, 431
Overcurrent 413
Overcurrent Detection Gain 363, 628
Overexcitation Deceleration 349
Overexcitation Deceleration Gain 370, 631
Overexcitation Operation Selection 370, 631
Overheat 1 (Heatsink Overheat) 416
Overheat Alarm Level 317, 627
Overheat Pre-Alarm Operation Selection 318, 627
Overload Protection 539
Overload Tolerance 531
Overspeed 418, 431
Overspeed Detection Delay Time 283
Overspeed Detection Level 283
Overtorque 1 431
Overtorque 2 431
Overtorque Detection 1 418
Overtorque Detection 2 418
Overtorque Detection Operation 356
Overvoltage 419
Overvoltage Protection 539
Overvoltage Suppression Function 350
Overvoltage Suppression Function Selection 350
ov Suppression Function Selection 622

P

Parameter Access Level 193
Parameter Range Setting Error 434
Parameters Changed with Motor Code Selection (PM Motors) 680
Parameter Selection Error 436
Parameter Settings 161
Parameters for KEB Ride-Thru 343
Parameters to Minimize Motor Hunting and Oscillation 398
PASS 432
Password 194, 200
Password Setting 200
Password Settings 194
Peak Hold Current 651
Peak Hold Output Frequency 652
Performance Life 463, 3
Performance Life Monitors Maintenance Monitors 3
Periodic Inspection 461
Periodic Maintenance 317
Permanent Magnet Motor Control 3
PF 420
PG 1 Division Rate for PG Pulse Monitor 284
PG 1 Gear Teeth 1 285
PG 1 Gear Teeth 2 285
PG 1 Pulses Per Revolution 283
PG 1 Rotation Selection 284
PG 1 Signal Selection 285
PG 2 Division Rate for PG Pulse Monitor 284

PG 2 Gear Teeth 1 285
PG 2 Gear Teeth 2 285
PG 2 Pulses Per Revolution 283
PG 2 Rotation Selection 284
PG 2 Signal Selection 285
PG-B3 500
PG Disconnect (for any control modes using a PG option card) 420
PG Disconnect (for Control Mode with PG) 432
PG-F3 500
PG Hardware Fault (detected when using a PG-X3 option card) .. 420, 432
PG Number of Pulses Per Revolution 185
PG Number of Pulses Per Revolution for PM Motor Tuning 188
PGo 420, 432
PGoH 420, 432
PGoH Detection Level 286
PG Open-Circuit Detection Time 283
PG Option Card Disconnection Detection 1 285
PG Option Card Disconnection Detection 2 285
PG Option Card Port for Motor 2 Selection 286
PG-RT3 501
PG-X3 500
Phase Order Selection 212
PID Accel/Decel Time 231
PID Block Diagram 226
PID Control 223
PID Feedback 653
PID Feedback High Detection Level 230
PID Feedback High Detection Time 230
PID Feedback Input Methods 224
PID Feedback Loss 411, 428
PID Feedback Loss Detection Selection 229
PID Feedback Low Detection Level 229
PID Feedback Low Detection Time 230
PID Fine Tuning 233
PID Function Setting 227
PID Input (feedback) 653
PID Input Limit 232
PID Monitors 386
PID Offset Adjustment 228
PID Output 653
PID Output Gain Setting 228
PID Output Level Selection 228
PID Output Limit 228
PID Output Lower Limit 231
PID Output Reverse Selection 228
PID Output Reverse Selection 2 232
PID Primary Delay Time Constant 228
PID Setpoint 653
PID Setpoint Display Digits 232
PID Setpoint Input Methods 224
PID Setpoint Scaling 231
PID Setpoint Selection 231
PID Setpoint User Display 232
PID Setpoint Value 231
PID Sleep 230
PID Sleep Delay Time 230
PID Sleep Function Start Level 230
PM Inductance Error 443
PM Motor Auto-Tuning Mode Selection 186
PM Motor Base Frequency 187
PM Motor Base Speed 187
PM Motor Code 281
PM Motor Code Selection 186
PM Motor Control Tuning 373
PM Motor d-Axis Inductance 187
PM Motor Induced Voltage Constant 188
PM Motor Parameter Settings 177
PM Motor q-Axis Inductance 187
PM Motor Rated Current 187
PM Motor Rated Power 186
PM Motor Rated Voltage 187
PM Motor Settings 186
PM Motor Stator Resistance 187
PM Motor Type 186
PM Rotational Auto-Tuning 178
PM Stationary Auto-Tuning 177
PM Stationary Auto-Tuning for Stator Resistance 177
Polarity Compensation Gain 3 374
Polarity Compensation Gain 4 374
Polarity Switch for Initial Polarity Estimation Timeout 282
Pole Attraction Current 373
Power Detection Filter Time 236
Powering Up the Drive 172
Power Ratings (Three-Phase 200 V Class) 529, 530, 531
Power Ratings (Three-Phase 400 V Class) 532, 533, 534
Power Ratings (Three-Phase 600 V Class) 535, 536, 537
Power Unit Output Phase Loss 3 412
Predefined V/f Patterns 271
Preface 18
Preparing the Ends of Shielded Cables 143
Preset Reference Timing Diagram 257
Previous Fault 649
PROFIBUS-DP Clear Mode Selection 293
PROFIBUS-DP Data Format Selection 293
PROFIBUS-DP Node Address 293
PROFIBUS-DP Parameters 293
Programming Mode 160, 161
Proportional Gain Setting (P) 227
Protective Cover 56
Protective Covers, Reattaching 122
Protective Covers, Removing 121, 122
Protective cover to prevent miswiring 49
PTC 325
Pull-In Current (for PM Motors) 375, 634
Pull-In Current Compensation Time Constant (for PM Motors) ... 375, 634
Pull-In Current Level for PM Motor Tuning 188
Pull-Out Detection 422
Pulse Monitor Selection Error 437
Pulse Output Connection Using External Voltage Supply 147
Pulse Output Connection Using Internal Voltage Supply 146
Pulse Train Input/Output 309
Pulse Train Input Bias 329
Pulse Train Input Filter Time 329
Pulse Train Input Gain 329
Pulse Train Input Minimum Frequency 330
Pulse Train Input Scaling 329
Pulse Train Input Terminal RP Function Selection 328
Pulse Train Monitor Scaling 330
Pulse Train Monitor Selection 330

Q

q-axis ACR Output 654

R

R- 140
R/L1 127
R+ 140
R1-L11 127
Radiated and Radio Frequency Noise 520
RAM Fault 406
Ramp to stop 207
Rated Current Depending on Carrier Frequency 253
Rated Current Setting Alarm 439
Rated Slip Error 441
rdEr 446
READ 383
rEAd 446
Reading Drive MEMOBUS/Modbus Register Contents 714
Reading Parameter Settings 446
Reattaching the Digital Operator 123
Reattaching the Front Cover 125
Reattaching the Protective Cover 126
Reattaching the Terminal Cover 121, 122
REMOTE 165
Removing the Cooling Fan 469
Removing the Digital Operator 123
Removing the Front Cover 123
Removing the Protective Cover 126
Removing the Terminal Cover 121, 122
Replacement Parts 463
Replacing the Drive 494
Reset Communication Parameters 291
RESET Key 155
Resistance Tuning Error 439
Response Messages from Drive to Master 711
Reverse Direction Output Example Time Chart 316
Reverse Operation Selection 210
Reverse Prohibited Error 443
Reverse Regenerative Torque Limit 359, 626
Reverse Torque Limit 359, 626
rF 420
rH 421
Rotational Auto-Tuning 176, 180
Rotational Auto-Tuning for V/f Control 176
RP 140
rr 421
RS-422 Interface 706
RS-485 Interface 705
RTS Control Selection 708
Rubber Bushing 41
rUn 432
Run Command/Frequency Reference Source Selection Error 435
Run Command at Power Up 213
Run Command Method Selection 709
Run Command Selection 1 ..... 206, 561
Run Command Selection 2 213
Run command selection while in Programming Mode 212
Run Command Source Selection 652
RUN Key 155
RUN LED 157
RUN Light 155
Run Speed after Soft Starter at Previous Fault 649
Rx to Tx Wait Time 295

S

S- 140
S/L2 127
S+ 140
S1 139
S1-L21 127
S2 139
S3 139
S4 139
S5 139
S6 139
S7 139
S8 139
Safe Disable Circuit 768
Safe Disable Function Wiring Example (SINK Mode) 769
Safe Disable Input Function 148
Safe Disable Inputs 139
Safe Disable Monitor Output Function and Digital Operator Display 769
Safe Disable Signal Input 428, 429
Safety Input and EDM Terminal Status 770
Safety Monitor Output 140
SC 139, 421
S-Curve Characteristics 398
SE 432
Search Operation Voltage Limit 236
Self-Diagnostics 307
SEr 421
Serial Communications Cable Connection Terminals (TB5) 704
Serial Communication Terminals 140
Serial Communication Transmission Error 426
Serviceable Parts 493
Setup Group 160
Setup Group Parameters 165
Setup Mode 161
Shielded Twisted-Pair Cables 143
Short Circuit Brake Time at Start 215
Short Circuit Brake Time at Stop 215
Short Circuit Braking Current 216
Side-by-Side Installation 55
Side-by-Side Mounting 554
Side-by-Side Setup 55
Simple Motor Setup Using V/f Control 168
Simplified Setup Using the Setup Group 161
Single Drive KEB Ride-Thru 1 339
Single Drive KEB Ride-Thru 2 339
Sink/source jumper S3 49
Sinking/Sourcing Mode for Digital Inputs 49
Slave Address 712
Slip Compensation 241
Slip Compensation Gain 241, 393
Slip Compensation Limit 242
Slip Compensation Primary Delay Time 242, 393
Slip Compensation Selection during Regeneration 242
SMRA Series SPM Motor Settings 680
SN 139
Soft Charge Bypass Relay Maintenance 651

Soft Charge Bypass Relay Maintenance Time 429
Soft CLA Selection 628
Software Current Limit Selection 363
Software No. (Flash) 648
Software No. (PWM) 648
Software No. (ROM) 648
Software version 35
Space Between Drives (Side-by-Side Mounting) 55
Speed/Torque Control Switchover Time 268
Speed Agree 1 Time Chart 311
Speed Agree 2 Time Chart 314
Speed Agree Detection Level 352, 624
Speed Agree Detection Level (+/-) 353, 624
Speed Agree Detection Selection 353, 624
Speed Agree Detection Width 352, 624
Speed Agree Detection Width (+/-) 353, 624
Speed Agree Width at Intelligent Stall Prevention during Decel 352
Speed Control Accuracy 538
Speed Control Integral Time 1 431
Speed Control Loop Auto-Tuning 179
Speed Control Proportional Gain 1 431
Speed Control Range 538
Speed Deviation 284, 407, 427
Speed Estimation Type Speed Search 217
Speed Feedback Detection Control (AFR) Gain 368, 630
Speed Feedback Detection Control (AFR) Time Constant 1 368, 630
Speed Feedback Detection Control (AFR) Time Constant 2 368, 630
Speed Feedback Detection Control Gain (for PM Motors) 375, 634
Speed Feedback Detection Control Gain during ov Suppression 377
Speed Limit 268
Speed Limitation 265
Speed Limit Bias 265, 268
Speed Limit Selection 267
Speed Response 538
Speed Search Deactivation Current 219
Speed Search Deceleration Time 219
Speed Search Delay Time 219
Speed Search Detection Compensation Gain 220
Speed Search Induced Voltage Level 222
Speed Search Method Selection 221
Speed Search Restart Current Level 221
Speed Search Restart Detection Time 221
Speed Search Selection at Start 219
Speed Search Selection when Run Command is Given during Uv 222
Speed Search Wait Time 221
SSR1 Series IPM Motor Settings681, 682, 683, 684, 685, 686, 687, 688, 689
SST4 Series IPM Motor Settings .. 690, 691, 692, 693, 694, 695, 696, 697, 698, 699
Stall Prevention 345, 398
Stall Prevention Detection Time 352
Stall Prevention Level during Acceleration 347, 622
Stall Prevention Level during Run 349, 622
Stall Prevention Limit during Acceleration 346, 622
Stall Prevention Selection during Acceleration 346, 622
Stall Prevention Selection during Deceleration 348, 622
Stall Prevention Selection during Run 349, 622
Standard 539
Standard Connection Diagram 112
Start Condition Selection at Closed Loop Vector Control 213
Starting Torque 538
Start Speed Search Select 222
Start-Up Flowcharts 166
Station Address Setting Error 425
Stationary Auto-Tuning 181
Stationary Auto-Tuning 1 176
Stationary Auto-Tuning 2 176
Stationary Auto-Tuning 3 176
Stationary Auto-Tuning for Line-to-Line Resistance 176
Stator Resistance Error 443
Status Display 172
STo 422
STOP button Input 440
STOP Key 155
STOP Key Function Selection 381, 637
Stopping Method after Communication Error 708
Stopping Method Selection 207
Storage Guidelines 462
Storage Temperature 54
Surrounding Area 54
SvE 422
Swing PWM 253, 528
Switching Between LOCAL and REMOTE 165
Switching Between Torque and Speed Control 266
System KEB Ride-Thru 1 339
System KEB Ride-Thru 2 340

T

T/L3 127
T1-03 183
T1-04 183
T1-05 183
T1-06 183
T1-07 183
T1-L31 127
Target DC Bus Voltage for ov Suppression and Stall Prevention 350
Task Complete 445
Temperature Derating 553
Terminal A1 Bias Setting 321
Terminal A1 Function Selection 321
Terminal A1 Gain Setting 321
Terminal A1 Signal Level Selection 320
Terminal A2 Bias Setting 323
Terminal A2 Function Selection 322
Terminal A2 Gain Setting 323
Terminal A2 Signal Level Selection 322
Terminal A3 Bias Setting 322
Terminal A3 Function Selection 322
Terminal A3 Gain Setting 322
Terminal A3 Signal Level Selection 321
Terminal Block Configuration 119
Terminal Board 41, 42, 43, 44, 45, 46, 47, 48, 49, 493
Terminal Board Connection Error 406
Terminal Board Connector 49
Terminal Board Not Connected 407
Terminal Connections for Communication Self-Diagnostics 734
Terminal Cover 41, 42, 43, 44, 45, 46, 47, 48, 121
Terminal Cover Screw 41
Terminal DM+ and DM- Output Signal Selection 49
Terminal M1-M2 Function Selection 309
Terminal M1-M2 Output Selection 289

Terminal M3-M4 Output Selection 289
Terminal P1-PC Function Selection..... 289
Terminal P2-PC Function Selection..... 289
Terminal P3-PC Output Selection 289
Terminal P4-PC Output Selection 289
Terminal P5-PC Output Selection 289
Terminal P6-PC Output Selection 289
Terminal V1 Monitor Bias 288
Terminal V1 Monitor Gain 288
Terminal V1 Monitor Selection..... 288
Terminal V1 Signal Level 289
Terminal V2 Monitor Bias 288
Terminal V2 Monitor Gain 288
Terminal V2 Monitor Selection..... 288
Terminal V2 Signal Level 289
Test Run..... 179, 181, 183, 190
Test Run Checklist..... 195
Test Run with Load Connected 192
Thermistor Disconnect 422, 432
THo 422
THo 432
Tightening Torque 129
Timer Function Off-Delay Time..... 222
Timer Function On-Delay Time 222
Timing Fault..... 406
Too Many Speed Search Restarts..... 421
Top Protective Cover.....41
Top protective Cover.....43
Torque Compensation at Forward Start..... 245
Torque Compensation at Reverse Start 245
Torque Compensation Gain 244
Torque Compensation Primary Delay Time 245
Torque Compensation Primary Delay Time 2 245
Torque Compensation Primary Delay Time Constant 1..... 393
Torque Compensation Primary Delay Time Constant 2..... 393
Torque Compensation Time Constant 245
Torque Control 264
Torque Control Block Diagram..... 264
Torque Control Input Value Selection 264
Torque Control Reference Sources..... 264
Torque Control Selection 267
Torque Control Setting Error..... 437
Torque Control Signal Polarity 265
Torque Detection 313
Torque Detection Level 1..... 357, 625
Torque Detection Level 2..... 357, 625
Torque Detection Selection 1 ..... 356, 625
Torque Detection Selection 2 ..... 356, 625
Torque Detection Time 1 ..... 357, 625
Torque Detection Time 2 ..... 357, 625
Torque Limit Control Method Selection during Accel/Decel 359, 626
Torque Limit Delay Time 352
Torque Limit Integral Time Constant..... 359, 626
Torque Limit Process at Start 627
Torque Limits 398
Torque Reference..... 646
Torque Reference/Torque Limit Selection from Comm. Option..... 290
Torque Reference at Previous Fault..... 649
Torque Reference Delay Time..... 267
Torque Specifications, Three Phase 200 V Class 129, 748
Torque Specifications, Three Phase 400 V Class 131, 751
Torque Specifications, Three Phase 600 V Class 134, 754
Troubleshooting without Fault Display..... 3
TrPC 433
Tuning Errors..... 399
Types of Alarms, Faults, and Errors 399
Types of Auto-Tuning for Induction Motors..... 176

U

U/T1 127
U1-07..... 450
U1-09..... 450
U2, U3 Initialization..... 384
U2, U3 Initial Value Selection 638
U2-02..... 447
U2-03 through U2-17 447
U4-05..... 433
UL3 ..... 422, 433
UL4 ..... 422, 433
UL5 423
UL and CSA Standards 748
UL Standards Compliance..... 748
UnbC 423
Undertorque Detection 1..... 422, 433
Undertorque Detection 2..... 422, 433
Undertorque Detection Operation 356
Undervoltage 433
Undervoltage 3 424
Undervoltage 3 (Soft-Charge Bypass Relay Fault) 424
Undervoltage Detection Level (Uv1) 344, 621
Undervoltage Protection 539
Unexpected Noise from Connected Machinery..... 454
Unidirectional Speed Limit Bias..... 268
Unit Code 381
Unit Selection for MEMOBUS/Modbus Register 0025H..... 709
Up/Down 2 Operations..... 307
Up/Down Command Operation..... 302
Up/Down Frequency Reference Limit Selection 263
Up Arrow Key..... 155
USB Copy Unit 194, 501
USB port (type-B) 41, 42, 43, 44, 45, 46, 47, 48, 149
User Defaults 193
User Monitor Selection after Power Up 379, 636
User Parameter Automatic Selection..... 193, 203, 560
User Parameter Default Value 381, 637
User Parameters 1 to 32..... 193, 203, 560
User-Set Display Units Decimal Display..... 380
User-Set Display Units Maximum Value..... 380
User Set Speed Agree 1 Time Chart 311
User Set Speed Agree 2 Example with a Positive L3-04 Value..... 315
Using Braking Units in Parallel..... 516
Using the Pulse Train Output 146
Using the Safe Disable Function..... 768
Uv..... 433
Uv1 423
Uv2 423
Uv3 424
Uv4 424

-

-V 140

V

V/f Characteristics 538
V/f Control 32
V/f Control Mode Tuning 392
V/f Control Mode Tuning Parameters 392
V/f control using motor speed feedback 32
V/f Control with Simple Speed Feedback 328
V/f Data Setting Error 437
V/f Gain during Speed Search 219
V/f Pattern Defaults 661
V/f Pattern Display Unit 380
V/f Pattern for Motor 2 277
V/f Pattern Selection 270
V/T2 127
vAEr 446
VERIFY 383
Verifying Parameter Changes 160
Verify Menu 160
vFyE 446
voF 424, 433
voF Alarm Location Monitor 653
Voltage Class, Capacity Mismatch 446
Voltage drop calculation formula 129
Voltage Error Compensation Time Constant 376
vrFy 446

W

W/T3 127
Warranty Information 28
Watchdog Circuit Exception 406
Water Supply Pump Application 173
Watt Hour Output Example 320
Watt Hour Output Unit Selection 318
Watt Loss 200 V Class Three Phase Models 540
Watt Loss 400 V Class Three Phase Models 540
Watt Loss Three-Phase 600 V Class Models 541
Wire Gauge, Three Phase 200 V Class 129, 748
Wire Gauge, Three Phase 400 V Class 131, 751
Wire Gauge, Three Phase 600 V Class 134, 754
Wire Gauges 129
Wiring Checklist 151
Wiring Diagram for 2-Wire Sequence 306
Wiring Distance 253
Wiring the Control Circuit Terminal 121
WRITE 383
Writing Parameter Settings 445
Writing to Multiple Registers 715

Z

Zero Servo 237
Zero Servo Completion Width 238
Zero Servo Fault 422
Zero Servo Gain 238
Zero-Speed Time Chart 310
Z Pulse Correction Error 444
Z Pulse Fault 408
Z Pulse Noise Fault Detection 408
Z Pulse Offset Tuning 177

Revision History

The revision dates and the numbers of the revised manuals appear on the bottom of the back cover.

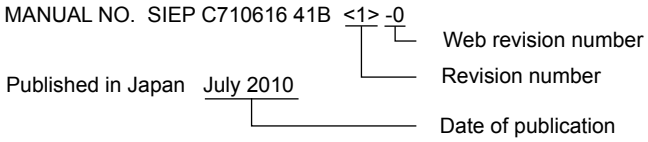

Date of Publication	Revision Number	Web Revision Number	Section	Revised Content	
March 2022	<7>	0	All	Revision:	Reviewed and corrected entire documentation.
			Back Cover	Revision:	Address
September 2019	<6>	0	All	Revision:	Updated the information to reflect the compliance of 600 V models with the safe disable input and European standards.
			Back Cover	Revision:	Address
April 2016	<5>	0	Front Cover	Revision:	Revision: Format
			All	Revision:	Reviewed and corrected entire documentation. Upgraded drive software version to PRG: 1021, PRG: 1022, PRG: 1023, and PRG: 1024
			Back Cover	Revision:	Format and address
October 2013	<4>	0	All	Revision:	Reviewed and corrected entire documentation. Upgraded drive software version to PRG: 1018, PRG: 1019, and PRG: 1020
			Chapter 2	Addition:	Addition: NEMA Type 1 and NEMA Type 12 External Heatsink Mounting data
			Back Cover	Revision:	Address
May 2012	<3>	0	Front Cover	Revision:	Format
			Chapter 8	Revision:	Factory Recommended Branch Circuit Protection data
			Appendix A	Addition:	Single-Phase Derating data
			Appendix D	Revision:	Factory Recommended Branch Circuit Protection data
			All	Revision:	Reviewed and corrected entire documentation. Upgraded drive software version to PRG: 1016 and PRG: 1017
			Back Cover	Revision:	Format and address
November 2010	<2>	0	All	Addition:	Larger drive capacities added along with corresponding data. Three-Phase 600 V Class: 5A0125 to 5A0242
				Revision:	Reviewed and corrected documentation.
July 2010	<1>	0	All	Addition:	Larger drive capacities added along with corresponding data. Three-Phase 400 V Class: 4A0930 and 4A1200 Three-Phase 600 V Class: 5A0041 to 5A0099
				Revision:	Reviewed and corrected entire documentation. Upgraded drive software version to PRG: 1015
April 2010	-	-	-	First Edition	This manual supports drive software versions VSA90504□ and VSA901014.

This Page Intentionally Blank

YASKAWA AC Drive-A1000

High Performance Vector Control Drive

Technical Manual

YASKAWA AMERICA, INC.
2121, Norman Drive South, Waukegan, IL 60085, U.S.A.
Phone: +1-800-YASKAWA (927-5292) or +1-847-887-7000 Fax: +1-847-887-7310
www.yaskawa.com

DRIVE CENTER (INVERTER PLANT)
2-13-1, Nishimiyaichi, Yukuhashi, Fukuoka, 824-8511, Japan
Phone: +81-930-25-2548 Fax: +81-930-25-3431
www.yaskawa.co.jp

YASKAWA ELECTRIC CORPORATION
New Pier Takeshiba South Tower, 1-16-1, Kaigan, Minatoku, Tokyo, 105-6891, Japan
Phone: +81-3-5402-4502 Fax: +81-3-5402-4580
www.yaskawa.co.jp

YASKAWA ELÉTRICO DO BRASIL LTDA.
777, Avenida Piraporinha, Diadema, São Paulo, 09950-000, Brasil
Phone: +55-11-3585-1100 Fax: +55-11-3585-1187
www.yaskawa.com.br

YASKAWA EUROPE GmbH
Hauptstraβe 185, 65760 Eschborn, Germany
Phone: +49-6196-569-300 Fax: +49-6196-569-398
www.yaskawa.eu.com E-mail: info@yaskawa.eu.com

YASKAWA ELECTRIC KOREA CORPORATION
35F, Three IFC, 10 Gukjegeumyung-ro, Yeongdeungpo-gu, Seoul, 07326, Korea
Phone: +82-2-784-7844 Fax: +82-2-784-8495
www.yaskawa.co.kr

YASKAWA ASIA PACIFIC PTE. LTD.
30A, Kallang Place, #06-01, 339213, Singapore
Phone: +65-6282-3003 Fax: +65-6289-3003
www.yaskawa.com.sg

YASKAWA ELECTRIC (THAILAND) CO., LTD.
59, 1F-5F, Flourish Building, Soi Ratchadapisek 18, Ratchadapisek Road, Huaykwang, Bangkok, 10310, Thailand
Phone: +66-2-017-0099 Fax: +66-2-017-0799
www.yaskawa.co.th

YASKAWA ELECTRIC (CHINA) CO., LTD.
22F, Link Square 1, No.222, Hubin Road, Shanghai, 200021, China
Phone: +86-21-5385-2200 Fax: +86-21-5385-3299
www.yaskawa.com.cn

YASKAWA ELECTRIC (CHINA) CO., LTD. BEIJING OFFICE
Room 1011, Tower W3 Oriental Plaza, No. 1, East Chang An Avenue,
Dong Cheng District, Beijing, 100738, China
Phone: +86-10-8518-4086 Fax: +86-10-8518-4082

YASKAWA ELECTRIC TAIWAN CORPORATION
12F, No. 207, Section 3, Beishin Road, Shindian District, New Taipei City 23143, Taiwan
Phone: +886-2-8913-1333 Fax: +886-2-8913-1513 or +886-2-8913-1519
www.yaskawa.com.tw

YASKAWA INDIA PRIVATE LIMITED
#17/A, Electronics City, Hosur Road, Bengaluru, 560 100 (Karnataka), India
Phone: +91-80-4244-1900 Fax: +91-80-4244-1901
www.yaskawaindia.in

YASKAWA

YASKAWA ELECTRIC CORPORATION

In the event that the end user of this product is to be the military and said product is to be employed in any weapons systems or the manufacture thereof, the export will fall under the relevant regulations as stipulated in the Foreign Exchange and Foreign Trade Regulations. Therefore, be sure to follow all procedures and submit all relevant documentation according to any and all rules, regulations and laws that may apply.

Specifications are subject to change without notice for ongoing product modifications and improvements.

© 2010 YASKAWA ELECTRIC CORPORATION

MANUAL NO. SIEP C710616 41H <7>-0

Published in Japan March 2022
20-2-22_YAI
Original instructions